Request for Proposal
Design & Fabrication Services

For

Whiskey Row Alley Archways

City Manager's Office

Telephone: (928) 777-1340

Fax: (928) 777-1255

Due Date: 2/20/2020

REQUEST FOR PROPOSAL

Whiskey Row Alley Archways

The City of Prescott, Arizona, Requests Proposals (RFP) from design artists, metal workers, and/or fabricators to provide professional design and fabrication services for the City of Prescott, Arizona. Proposals must be received before 2:00 PM on Thursday **2/20/2020**, City Clerk's Office, 201 South Cortez Street, Prescott Arizona 86303, at which time all proposals will be publicly opened.

Any proposals received at or after 2:00 PM on the above stated date will be returned unopened. Proposals must conform to this RFP. The City of Prescott reserves the right to reject any and all proposals and the City assumes no liability for the cost of preparing a response to this request.

The outside of the submittal envelope shall indicate the name and address of the respondent and shall be addressed to the City Clerk, City of Prescott, at the above address and shall be marked: **Request for Proposal Submittal: WHISKEY ROW ALLEY ARCHWAYS**.

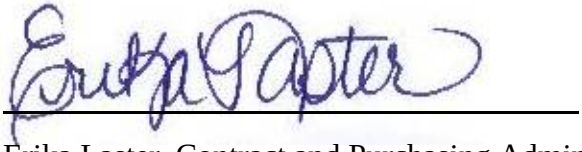

Erika Laster, Contract and Purchasing Administrator
Published: 2TC January 26 & February 2, 2020.

REQUEST FOR PROPOSALS (RFP)
WHISKEY ROW ALLEY ARCHWAY

TABLE OF CONTENTS

Description of Work 4

Submittal 4

Evaluation and Format of Proposals and Statements of Qualifications; 4

Shortlist and Interviews 5

Final Ranking and Contract Negotiation 6

ATTACHMENTS

Sample Contract
Structural Calculations
Final Plans
Alley South Entry Concept

DESCRIPTION OF WORK

The City of Prescott will be reviewing the proposals and qualifications of artistic design, metal working/fabricating firms/individuals for the purpose of entering into a contract for the following services:

- Design and fabrication of two (2) steel archway signs

The project will consist of designing two (2) steel archway signs that say, "Whiskey Row Alley". These will be placed at the south entrance and north exit of Whiskey Row Alley in downtown Prescott. Professional engineering design and specifications have already been created and are attached to this RFP. The design and fabrication of the mounting structures must follow those engineering specifications, but creative design of the archways is open to the bidder. The final product will be picked up and installed by the City and does not need to be included in the overall proposal or cost. However, an optional cost addendum may be included reflecting what transportation and installation costs would be.

SUBMITTAL

Sealed Proposals and Statements of Qualifications will be received before 2:00 PM on Thursday **2/20/2020**, at the City Clerk's Office, 201 South Cortez Street, Prescott Arizona 86303, at which time all submittals will be publicly opened. Any submittals received at or after 2:00 PM on the above-stated date will be returned unopened.

Proposals shall be submitted in three (3 copies). The City of Prescott reserves the right to reject any and all submittals and the City assumes no liability for the cost of preparing a response to this request.

The outside of the proposal envelope shall indicate the name and address of the respondent, shall be addressed to the City Clerk, City of Prescott at the above address and shall be marked: **Proposal and Statement of Qualifications: Whiskey Row Alley Archways**

EVALUATION AND FORMAT OF PROPOSALS AND STATEMENTS OF QUALIFICATIONS;

A.1 Evaluation

Proposals and Statements of Qualifications will be evaluated by a Review Committee appointed by the City for this project according to the following criteria, with weighting as indicated:

1) Specific experience of the firm with comparable design and fabrication work within the State of Arizona - 20%

2) Experience and performance of the proposed project team and availability (timeline), within current and anticipated workload, for this project - 25%

3) Proposed project approach to design and fabrication- 25%

4) Overall quality of the Proposal - 15%

5) Cost to design and fabricate (and optional addendum on cost to transport and install, if included) - 15%

A.2 Statements of Qualifications

The statement shall be limited to no more than two (2) pages, and include the following:

- Location of the firm
- A list of similar projects in which the firm/individual has participated, and contact information

Three (3) additional pages of appendices are allowed and may include photos, or designs of other work accomplished.

A.3 Proposal

The proposal shall be limited to no more than five (5) pages, and include the following:

- Supply an artistic rendering of proposed Archway concept
- A tentative schedule for completion of the project
- Identify any suggestions to improve the project and/or schedule of delivery for the project.
- Cost Proposals for design and fabrication of the two (2) archways. An optional cost addendum may be included showing the estimate cost to transport and install the archways.

SHORTLIST AND INTERVIEWS

Following evaluation of the Proposals and Statements of Qualifications, a shortlist of up to three (3) firms will be determined based upon the composite score of Review Committee members. The Review Committee will have the opportunity to discuss questions regarding the firms'/individual's submittal and familiarity with the scope, location, and other aspects of this project. The City reserves the right to proceed to Final Ranking based on the Proposals and Statements of Qualifications submitted.

FINAL RANKING AND CONTRACT NEGOTIATION

The Review Committee will consider information from the Proposals and Statements of Qualifications in their final ranking of firm(s)/individual(s). The Review Committee will then formulate a consensus ranking, notify each of the candidates of the final rankings and meet with the top-ranked candidate for the purpose of initiating contract negotiations. If negotiations are unsuccessful with the top ranked candidate, the City will terminate negotiation efforts and open negotiations with the 2nd ranked candidate. This process will continue until negotiation efforts are successful. The City also reserves the right to reject all submittals and re-advertise the project should the City not reach agreement on the terms of the contract with the selected candidate.

Approval of the City Council will be required for award of a contract for performance of the services described herein in accordance with the procurement code.

Professional Services Agreement

Whiskey Row Alley Archways Project
Contract No. 2020-XXX

WHEREAS, the City of Prescott (hereinafter referred to as "City") is in need of certain services; and

WHEREAS, the City has solicited Requests for Qualifications in accordance with local and State Law; and

WHEREAS, ** (hereinafter referred to as "Professional"), has expertise in providing ** services.

NOW, THEREFORE, IN CONSIDERATION OF THE COVENANTS HEREIN CONTAINED, and for other good and valuable consideration, the receipt and sufficiency of which is hereby acknowledged by each party to the other, it is hereby agreed as follows:

1. That Professional shall provide the services to the City in relation to the Whiskey Row Alley Archways Project as indicated in Exhibit "A" (Request for Statements of Qualifications, Statement/Proposal, and Detailed Scope of Work, Task and Fee Estimate, and Project Schedule as accepted by the Mayor and Council per the Council Minutes of **) and as requested by the City Public Works Director (hereinafter referred to as "Director").
2. In addition to those services identified in Paragraph 1 above, the Professional shall also perform all subordinate tasks not specifically referenced in Paragraph 1, but necessary to the full and effective performance of the tasks specifically referenced.
3. The Professional shall provide sufficient qualified personnel to perform any and all services as required herein, including but not limited to inspections and preparation of reports, as reasonably requested by representatives of the City.
4. All services identified in Paragraphs 1 and 2 above shall be completed to the satisfaction of the City and shall be performed in compliance with the Professional's project schedule identified in the attached Exhibit "A".
5. The term of this Agreement shall be ** to **.
6. Notwithstanding the foregoing, this Agreement may be terminated by either party upon ten (10) days written notice, with or without cause or upon completion of services. If this Agreement is terminated, the Professional shall be paid for authorized services satisfactorily performed to the date of the Professional's receipt of such termination notice.
7. It is agreed by and between the parties that this Agreement incorporates the attached Exhibit "A" thereto as a part of this Agreement, and that the terms thereof shall be binding between the parties.
8. Pursuant to A.R.S. § 38-511, the City may cancel this Agreement, without penalty or further obligation, if any person significantly involved in initiating, negotiating, securing, drafting or

SAMPLE

creating the Agreement on behalf of the City is, at any time while the Agreement or any extension of the Agreement is in effect, an employee or agent of any other party to the Agreement in any capacity or a Professional to any other party of the Agreement with respect to the subject matter of the Agreement. In the foregoing event, the City further elects to recoup any fee or commission paid or due to any person significantly involved in initiating, negotiating, securing, drafting or creating this Agreement on behalf of the City from any other party to the Agreement arising as a result of this Agreement.

9. Any notices to be given by either party to the other must be in writing, and personally delivered or mailed by prepaid postage, at the following addresses:

Public Works Director	**
City of Prescott	**
433 N. Virginia Street	**
Prescott, Arizona 86301	**

10. It is expressly agreed and understood by and between the parties that the Professional is an independent contractor, and, as such, Professional shall not become a City employee, and is not entitled to payment or compensation from the City, or to any fringe benefits to which other City employees are entitled. As an independent contractor, Professional further acknowledges that it is solely responsible for payment of any and all income taxes, FICA, withholding, unemployment insurance, or other taxes due and owing any governmental entity whatsoever as a result of this Agreement. As an independent contractor, Professional further agrees that it will conduct itself in a manner consistent with such status, and that it will neither hold itself out nor claim to be an officer or employee of the City by reason thereof, and that it will not make any claim, demand or application to or for any right or privilege applicable to any officer or employee of the City, including, but not limited to, worker's compensation coverage, unemployment insurance benefits, social security coverage, or retirement membership or credit.

11. This Agreement is non-assignable by the Professional unless by sub-contract, as approved in advance by the City.

12. (A) The City shall pay to Professional a total sum of ** dollars and ** cents ($**) for all services specified in Sections 1 and 2 of this Agreement, as specified in Exhibit "A".

    (B) The foregoing sum includes payment for any and all services to be rendered by Professional or sub-contractors, which the Professional may employ for this Contract. It is expressly agreed by and between the parties that the Professional is solely responsible for any and all payment to such any other professionals or sub-contractors retained by the Professional.

    (C) Payment of the total amount provided for under Section 12 (A) shall not relieve Professional of its obligation to complete the performance of all those services specified in Sections, 1, 2, and 3. Should the City request in writing additional services beyond that specified in Sections 1, 2, and 3, then Professional shall charge and City shall pay Professional in accordance with Exhibit "A".

    (D) Prior to the final payment to the Professional, the City shall deduct therefrom any and all unpaid privilege, license and other taxes, fees and any and all other unpaid monies due the City from the Professional, and shall apply to those monies to the appropriate accounts. Professional shall provide to the City any information necessary to determine the total amount(s) due.

SAMPLE

(E) The Professional shall bill the City monthly for the fee due the Professional, based upon an hourly rate for work completed for each itemized task pursuant to this Agreement and Exhibit "A" during the billing period. City shall pay such billings within thirty (30) days of the date of their receipt.

13. This Agreement is the result of negotiations by and between the parties. Although it has been drafted by the Prescott City Attorney, it is the result of negotiations between the parties. Therefore, any ambiguity in this Agreement is not to be construed against either party.

14. This Agreement shall be construed under the laws of the State of Arizona.

15. All work products of the Professional for this Project are instruments of service for this Project only and shall remain the property of the City whether the Project is completed or not. All plans, drawings, specifications, data maps, studies and other information, including all copies thereof, furnished by the City shall remain the property of the City. They are not to be used on other work, and, with the exception of this Agreement, are to be returned to the City on request or at the completion of the work.

16. The parties hereto expressly covenant and agree that in the event of a dispute arising from this Agreement, each of the parties hereto waives any right to a trial by jury. In the event of litigation, the parties hereby agree to submit to a trial before the Court. The Professional further agrees that this provision shall be contained in all sub-contracts related to the project, which is the subject of this Agreement.

17. The parties hereto expressly covenant and agree that in the event of litigation arising from this Agreement, neither party shall be entitled to an award of attorney fees, either pursuant to the Agreement, pursuant to A.R.S. § 12-341.01(A) and (B), or pursuant to any other state or federal statute, court rule, case law or common law. The Professional further agrees that this provision shall be contained in all sub-contracts related to the project, which is the subject of this Agreement.

18. This Agreement represents the entire and integrated Agreement between the City and the Professional and supersedes all prior negotiations, representations or agreements, either written or oral. This Agreement may be amended only by written instrument signed by both the City and the Professional. Written and signed amendments shall automatically become part of the Agreement, and shall supersede any inconsistent provision therein; provided, however, that any apparent inconsistency shall be resolved, if possible, by construing the provisions as mutually complementary and supplementary.

19. In the event any provision of this Agreement shall be held to be invalid and unenforceable, the remaining provisions shall be valid and binding upon the parties. One or more waivers by either party of any provision, term, condition or covenant shall not be construed by the other party as a waiver of a subsequent breach of the same by the other party.

20. Subject to the limitations of A.R.S. § 34-226, the Professional hereby agrees to indemnify and hold harmless the City, its departments and divisions, its employees and agents, from any and all claims, liabilities, expenses or lawsuits as a result of the Professional's negligent acts, errors, or omissions, pursuant to this Agreement, except to the extent said claims, liabilities, expenses or lawsuits arise by the negligent acts or omissions of the City or his/her agents. The Professional further releases and discharges the City, its departments and divisions, its agents and employees, and any and all persons legally responsible for the acts or omissions of the City, from any and all claims which the Professional has or may have against the City, its agents or employees, arising out of or in any way connected with the Professional's activities

SAMPLE

as set forth below, other than those acts which occur due to the negligence of the City, its employees or agents.

21. No oral order, objection, claim or notice by any party to the other shall affect or modify any of the terms or obligations contained in this Agreement, and none of the provisions of this Agreement shall be held to be waived or modified by reason of any act whatsoever, other than by a definitely agreed waiver or modification thereof in writing. No evidence of modification or waiver other than evidence of any such written notice, waiver or modification shall be introduced in any proceeding.

22. (A) Changes in Work: The City, without invalidating the Contract, may order extra work, make changes by altering, or delete any portion of the work as specified herein, or as deemed necessary or desirable by the Director. All such work shall be executed under the conditions of the original Contract except that any claim for extension of time and additional cost caused thereby shall be made at the time of ordering such change or extra work.

    (B) Extra work shall be that work not indicated or detailed on the Scope of Work and not specified. Such work shall be governed by all applicable provisions on the Contract Document.

    (C) In giving instructions, the Director shall have authority to make minor changes in the work, not involving extra cost, and not inconsistent with the purposes of the work. No extra work or change shall be made unless in pursuance of a written order by the Director and no claim for an addition to the total amount of the Contract shall be valid unless so ordered.

    (D) Payment for any change ordered by the Director which involves work essential to complete the Contract, but for which no basis of payment is provided for herein, shall be subject to agreement prior to said work being performed.

    (E) Adjustments to price and/or Contract Time which are agreed upon shall be incorporated in the written order issued by the Director, which shall be written so as to indicate acceptance on the part of the Professional as evidenced by its signature. In the event prices cannot be agreed upon, the City reserves the right to terminate the Contract as it applies to the items in question and make such arrangements as it may deem necessary to complete the work, or it may direct the Professional to proceed with the items in question to be reimbursed pursuant to the unit prices in the Professional's fee proposal.

    (F) If the Professional claims that any instructions involve extra cost under this Contract, it shall give the Director written notice thereof within forty-eight (48) hours after the receipt of such instructions, and in any event before proceeding to execute the work. No such claim shall be valid unless so made. The Professional shall do such extra work therefore upon receipt of an accepted Contract Amendment or other written order of the Director and in the absence of such Contract Amendment or other written order of the Director, the Professional shall not be entitled to payment for such extra work. In no case shall work be undertaken without written notice from the Director to proceed with the work. All Contract Amendments must be approved by the Director. Contract Amendments over $25,000.00 must be approved by City Council.

23. (A) The Professional shall obtain and maintain in effect during the term of, and until final acceptance of all work under this Agreement, a policy or policies of liability insurance with the following coverage:

    1) Commercial General Liability – Occurrence Form (if applicable)

SAMPLE

Policy shall include bodily injury, property damage, personal injury, broad form contractual liability, and XCU coverage.

General Aggregate	$ 2,000,000
Products – Completed Operations Aggregate	$ 2,000,000
Personal and Advertising Injury	$ 1,000,000
Each Occurrence	$ 1,000,000
Fire Legal Liability (Damage to Rented Premises)	$ 100,000

The policy shall be endorsed to include the following additional insured language:

"The City of Prescott shall be named as an additional insured with respect to liability arising out of the activities performed by, or on behalf of the Professional."

2) Professional Liability (Errors and Omissions Liability)

Each Claim	$ 1,000,000
Annual Aggregate	$ 2,000,000

In the event that the professional liability insurance required by this Contract is written on a claims-made basis, Professional warrants that any retroactive date under the policy shall precede the effective date of this Contract and that either continuous coverage will be maintained or an extended discovery period will be exercised for a period of two (2) years at the time work under this contract is completed.

The policy shall cover professional misconduct or lack of ordinary skill for those positions defined in the Scope of Work of this contract.

3) Business Automobile Liability (if applicable) Bodily Injury and Property Damage for any owned, hired, and/or non-owned vehicles used in the performance of this Contract.

Combined Single Limit (CSL)	$ 1,000,000

(B) City and Professional waive all rights against each other and their directors, officers, partners, commissioners, officials, agents, sub-contractors and employees for damages covered by property insurance during and after completion of the Services.

(C) All insurance required pursuant to this Agreement must be written by an insurance company authorized to do business in the State of Arizona, to be evidenced by a Certificate of Authority as defined in A.R.S. § 20-217, a copy of which certificate is to be attached to each applicable bond or binder.

(D) Prior to commencing work under this Agreement, the Professional shall provide City with evidence that it is either a "self-insured employer" or a "carrier insured employer" for Workers' Compensation as required by A.R.S. § 23-901 et seq., or that it employs no persons subject to the requirement for such coverage.

(E) Notice of Cancellation: With the exception of a ten (10) day notice of cancellation for non-payment of premium, any changes material to compliance with this contract in the insurance policies above shall require a thirty (30) day written notice.

(F) Acceptability of Insurers: Insurance is to be placed with insurers with a current A.M. Best's rating of no less than A-VII, unless otherwise approved by the City of Prescott Risk Management Division. All insurance is to be placed with an insurer admitted in the state in which operations are taking place.

(G) Verification of Coverage: Professional shall furnish the City with certificates of insurance (ACORD form or equivalent approved by the City) as required by this Contract.

SAMPLE

The certificates for each insurance policy are to be signed by a person authorized by that insurer to bind coverage on its behalf. Please note the contract number on the Certificate.

24. The Professional, with regard to the work performed by it after award and during its performance of this contract, will not discriminate on the grounds of race, color, national origin, religion, sex, disability or familial status in the selection and retention of sub-contractors, including procurement of materials and leases of equipment. The Professional will not participate either directly or indirectly in the discrimination prohibited by or pursuant to Title VI of the Civil Rights Act of 1964, Section 504 of the Rehabilitation Act of 1973, Section 109 of the Housing and Community Development Act of 1974, the Age Discrimination Act of 1975, the Americans With Disability Act (Public Law 101-336, 42 U.S.C. 12101-12213) and all applicable federal regulations under the Act, and Arizona Governor Executive Orders 99-4, 2000-4 and 2009-09 as amended.

25. Professional Immigration Warranty

    Professional understands and acknowledges the applicability to it of the Americans with Disabilities Act, the Immigration Reform and Control Act of 1986 and the Drug Free Workplace Act of 1989. The following is only applicable to construction contracts: The Professional must also comply with A.R.S. § 34-301, "Employment of Aliens on Public Works Prohibited", and A.R.S. § 34-302, as amended, "Residence Requirements for Employees".

    Under the provisions of A.R.S. § 41-4401, Professional hereby warrants to the City that the Professional and each of its sub-contractors ("Sub-contractors") will comply with, and are contractually obligated to comply with all Federal Immigration laws and regulations that relate to their employees and A.R.S. § 23-214(A) (hereinafter "Professional Immigration Warranty").

    A breach of the Professional Immigration Warranty shall constitute a material breach of this Contract and shall subject the Professional to penalties up to and including termination of this Contract at the sole discretion of the City.

    The City retains the legal right to inspect the papers of any Professional or Sub-contractors' employee who works on this Contract to ensure that the Professional or Sub-contractor is complying with the Professional Immigration Warranty. Professional agrees to assist the City in regard to any such inspections.

    The City may, at its sole discretion, conduct random verification of the employment records of the Professional and any of Sub-contractors to ensure compliance with the Professional Immigration Warranty. Professional agrees to assist the City in regard to any random verification performed.

    Neither the Professional nor any Sub-contractor shall be deemed to have materially breached the Professional Immigration Warranty if the Professional or Sub-contractor establishes that it has complied with employment verification provisions prescribed by Sections 274A and 274B of the Federal Immigration and Nationality Act and the E-Verify requirements prescribed by A.R.S. § 23-214(A).

    The provisions of this Article must be included in any contract the Professional enters into with any and all of its Sub-contractors who provide services under this Contract or any sub-contract. "Services" are defined as furnishing labor, time or effort in the State of Arizona by a professional or sub-contractor. Services include construction or maintenance of any structure, building or transportation facility or improvement to real property.

SAMPLE

26. Professional shall exercise the same degree of care, skill and diligence in the performance of the Services as is ordinarily possessed and exercised by a professional under similar circumstances.

27. Nothing in this Agreement shall be construed to give any rights or benefits to anyone other than the City and Professional.

28. Israel: Vendor certifies that it is not currently engaged in, and agrees for the duration of this Agreement that it will not engage in a "boycott", as that term is defined in A.R.S. § 35-393, of Israel.

29. In the event of a discrepancy between this Agreement and Exhibit "A", this Agreement shall control over Exhibit "A".

30. Non-Availability of Funds: Fulfillment of the obligation of the City under this Agreement is conditioned upon the availability of funds appropriated or allocated for the performance of such obligations. If funds are not allocated and available for the continuance of this Agreement, this Agreement may be terminated by the City at the end of the period for which the funds are available. No liability shall accrue to the City in the event this provision is exercised, and the City shall not be obligated or liable for any future payments as a result of termination under this paragraph.

Dated this _____ day of _____, 2019.

City of Prescott, a municipal corporation:

_____
Greg L. Mengarelli, Mayor

PROFESSIONAL:

_____
** (Signature)

By: _____
(Printed Name)

Title: _____

ATTEST:

_____
Sarah Siep , City Clerk

APPROVED AS TO FORM:

_____
Jon M. Paladini, City Attorney

SAMPLE

WHISKEY ROW IMPROVEMENTS
CITY OF PRESCOTT, ARIZONA

STRUCTURAL CALCULATIONS FOR:
Whiskey Row Sign

Prepared By:
David Leistiko, P.E.
Ph: 602-944-5500
Kimley-Horn and Associates, Inc.
7740 N 16th Street
Suite 300
Phoenix, Arizona 85020

Date: November 2019

Kimley»Horn

Design References:

1. IBC 2018 with City of Prescott Amendments

TABLE OF CONTENTS

Wind Loading 3

STAAD Output 5

Foundation Design 19

Base Plate & Anchor Bolt Design 25

WIND LOADING

Wind Load Input

By: CHG
Date: 10/18/19

Arch Chord Members:	3.0	in
Arch Member Trib Width:	18.0	in
Column Width:	6.5	
Risk Category:	II	
Basic Wind Speed (V):	115	mph
Directionality Constant (k_d):	0.85	
Exposure Level:	B	
Roof Height (z):	16.01	ft
Velocity Pressure Coefficient (k_z):	0.57	
Topographic Factor (k_{zt}):	1	
Gust Factor (G):	0.85	
Velocity Pressure (q_z):	16.40	psf
Net Force Coefficient (C_f) (flat-sided members):	2.0	
Net Force Coefficient (C_f) (Rounded Members):	1.2	
Arch Percent Solid	0.5	
Design Wind Force on Columns:	0.0151	klf
Design Wind Force on Arch:	0.0209	klf
esign Wind Forces on Arch Chords:	0.0035	klf

STAAD OUTPUT

Job Information

	Engineer	Checked	Approved
Name:	CHG	DJL	
Date:	19-Oct-10	19-Oct-23	

Project ID	
Project Name	

Structure Type	SPACE FRAME

Number of Nodes	38	Highest Node	807
Number of Elements	51	Highest Beam	5009

Number of Basic Load Cases	2
Number of Combination Load Cases	6

Included in this printout are data for:

All	The Whole Structure

Included in this printout are results for load cases:

Type	L/C	Name
Primary	1001	LC1001: DL
Primary	2001	LC2001: WL
Combination	8001	STR1:1.4*DL
Combination	8002	STR2:1.2*DL+1.0*WL
Combination	8003	STR3:0.9*DL+1.0*WL
Combination	9001	SER1:1.0*DL
Combination	9002	SER2:1.0*DL+0.6*WL
Combination	9003	SER3:0.6*DL+0.6*WL

Software licensed to Kimley-Horn and Associates CONNECTED User: Charlie Golek	Job No	Sheet No **2**	Rev
	Part		
Job Title Whiskey Row Sign Structure	Ref		
	By CHG	Date 19-Oct-10	Chd DJL
Client	File Whiskey Row Sign Frame.	Date/Time 23-Oct-2019 15:43	

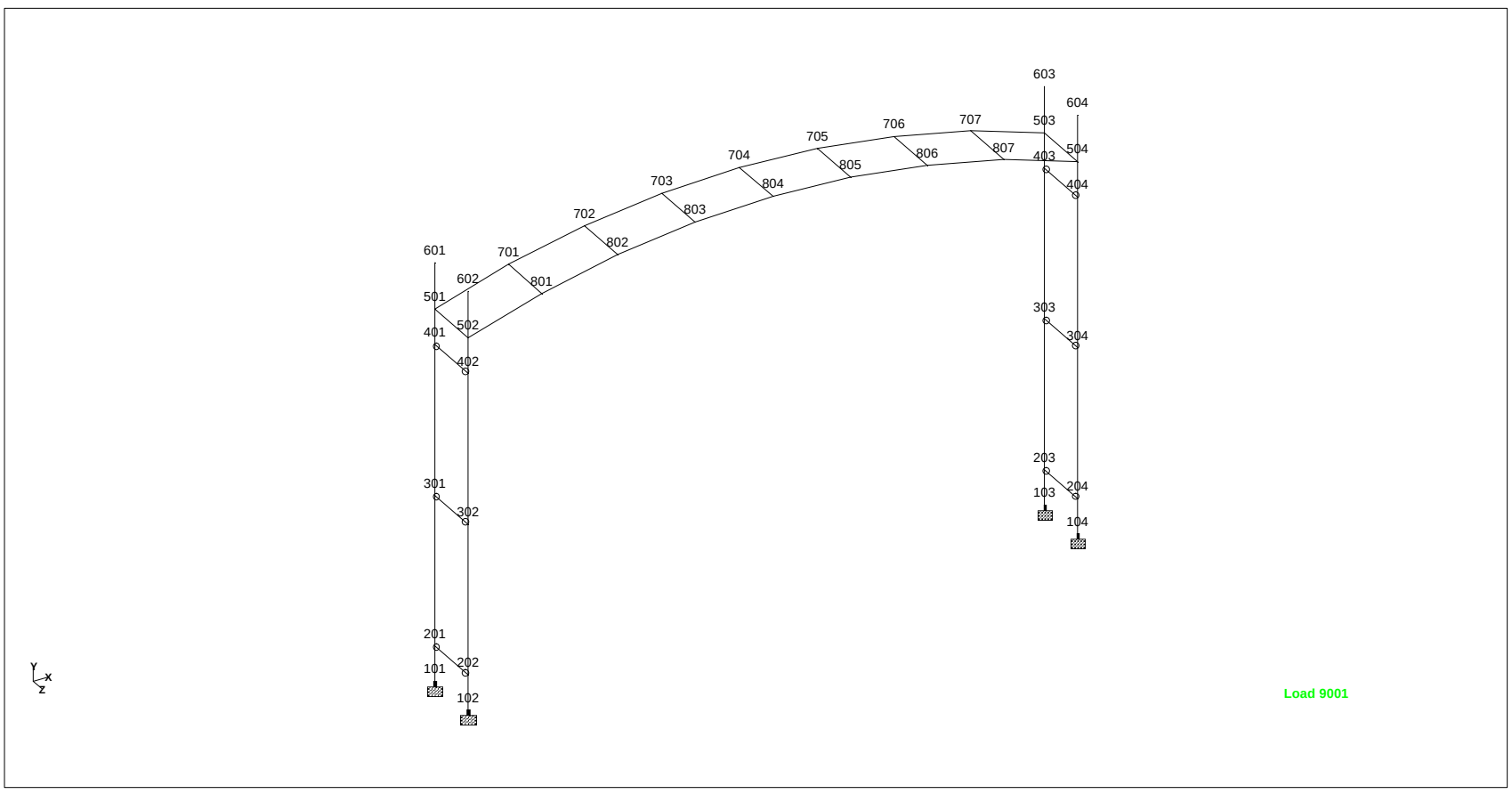

Node Layout

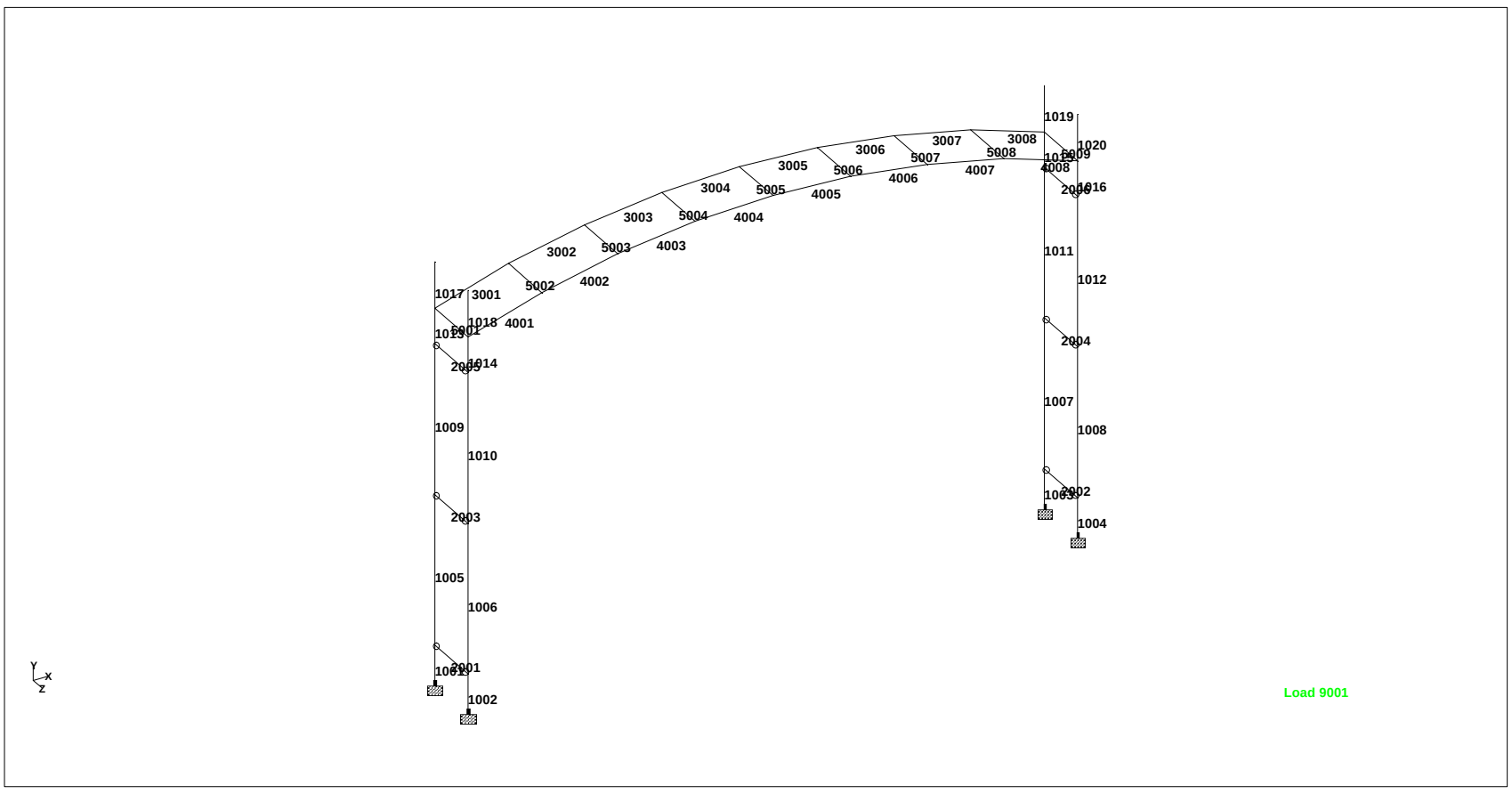

Member Layout

Software licensed to Kimley-Horn and Associates CONNECTED User: Charlie Golek	Job No	Sheet No **3**	Rev
	Part		
Job Title Whiskey Row Sign Structure	Ref		
	By CHG	Date 19-Oct-10	Chd DJL
Client	File Whiskey Row Sign Frame.	Date/Time 23-Oct-2019 15:43	

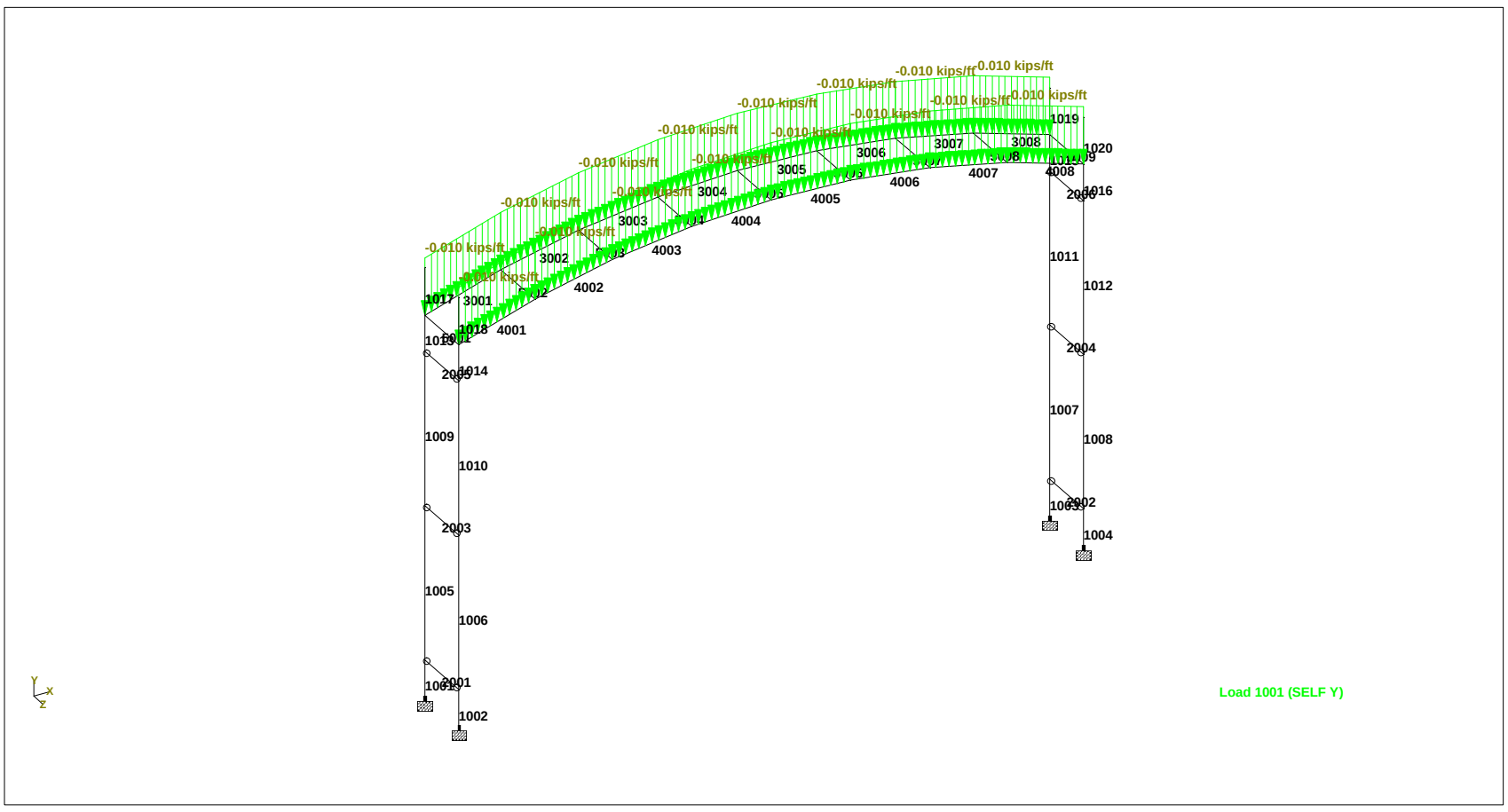

Dead Load (self weight included)

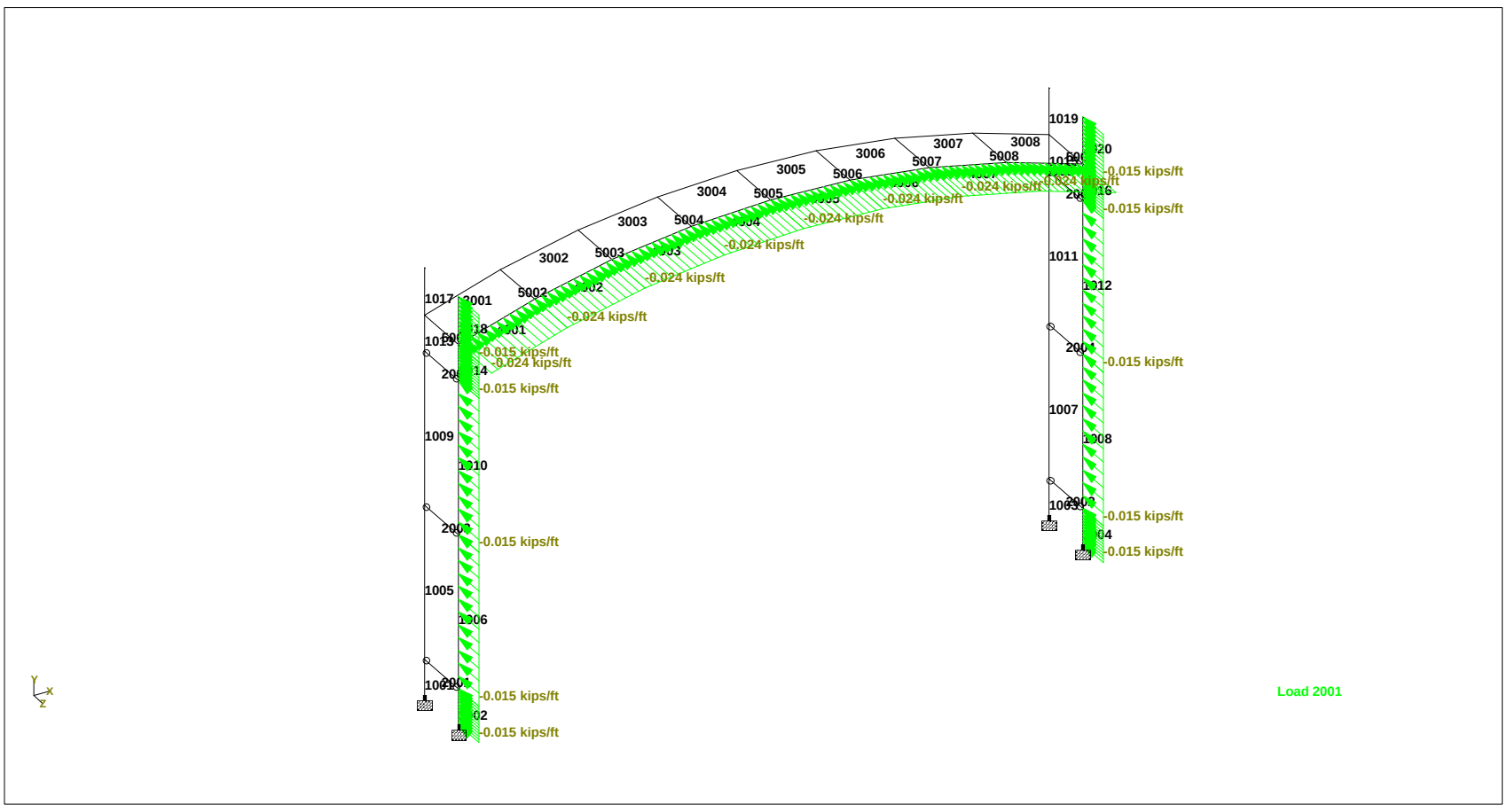

Wind Load

Software licensed to Kimley-Horn and Associates CONNECTED User: Charlie Golek	Job No	Sheet No **4**	Rev
	Part		
Job Title Whiskey Row Sign Structure	Ref		
	By CHG	Date 19-Oct-10	Chd DJL
Client	File Whiskey Row Sign Frame.	Date/Time 23-Oct-2019 15:43	

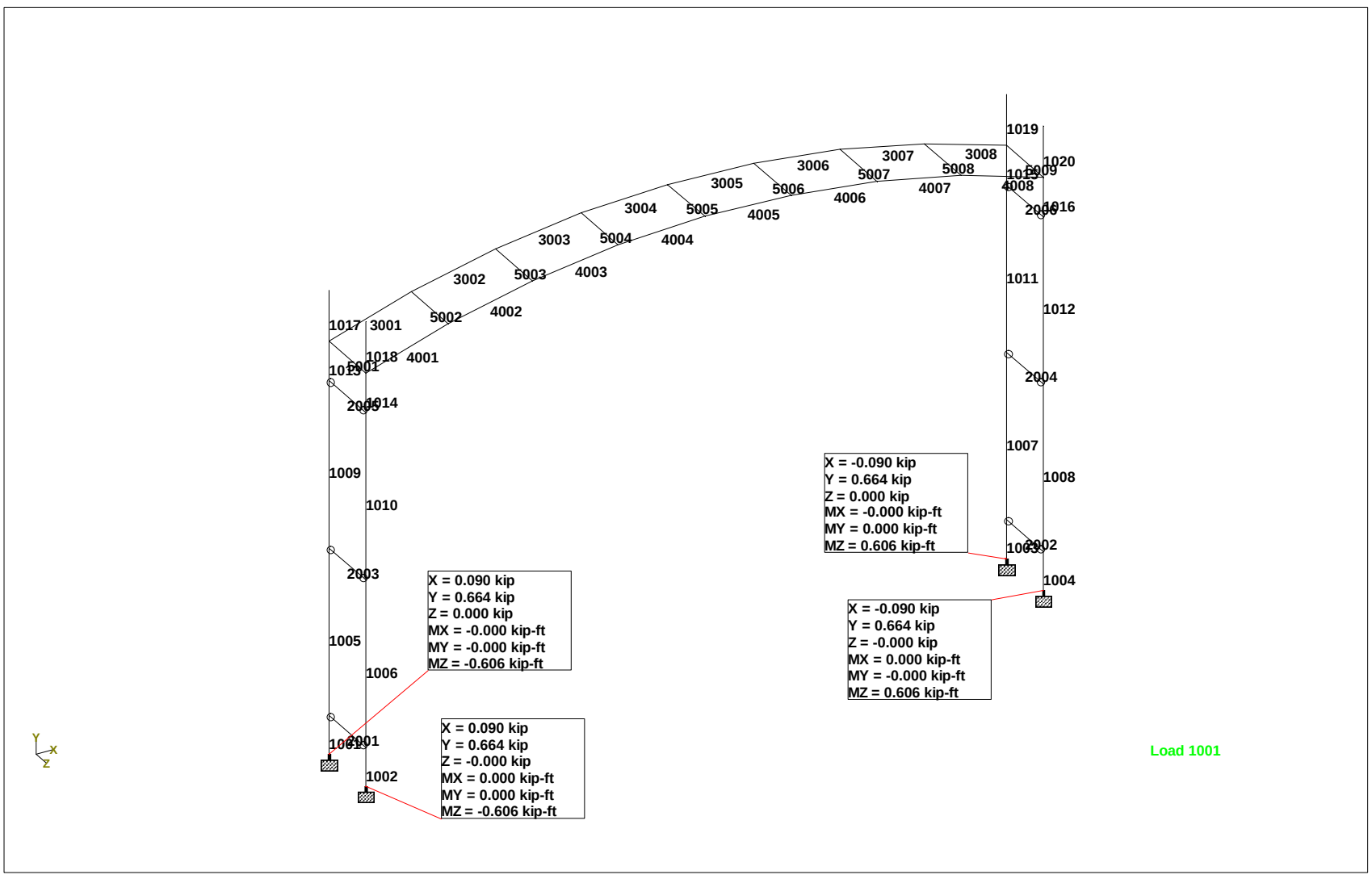

Reactions (dead load only) (unfactored)

Software licensed to Kimley-Horn and Associates CONNECTED User: Charlie Golek	Job No	Sheet No **5**	Rev
	Part		
Job Title Whiskey Row Sign Structure	Ref		
	By CHG	Date 19-Oct-10	Chd DJL
Client	File Whiskey Row Sign Frame.	Date/Time 23-Oct-2019 15:43	

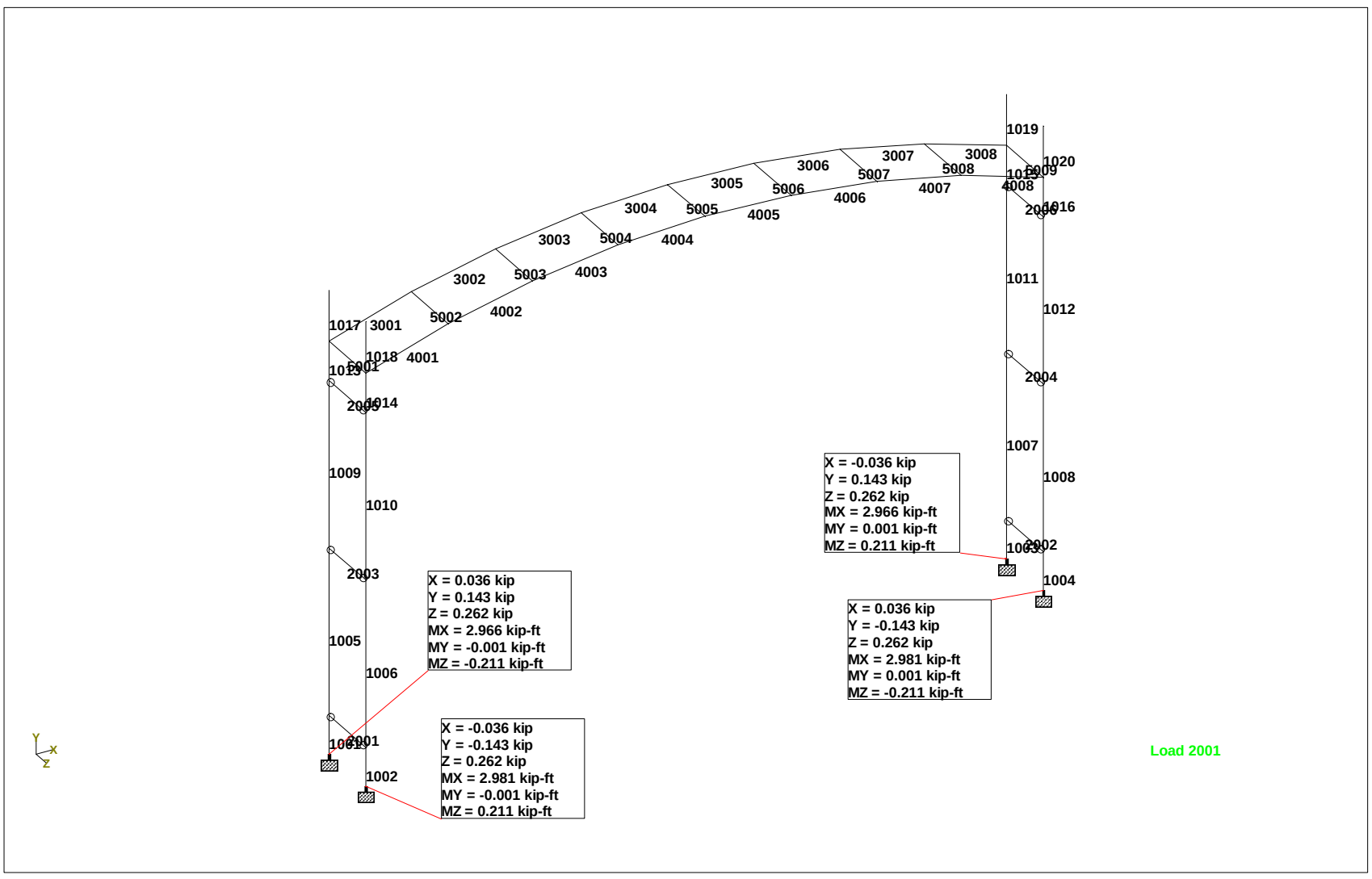

Reactions (wind load only, unfactored)

Software licensed to Kimley-Horn and Associates CONNECTED User: Charlie Golek	Job No	Sheet No **6**	Rev
	Part		
Job Title Whiskey Row Sign Structure	Ref		
	By CHG	Date 19-Oct-10	Chd DJL
Client	File Whiskey Row Sign Frame.	Date/Time 23-Oct-2019 15:43	

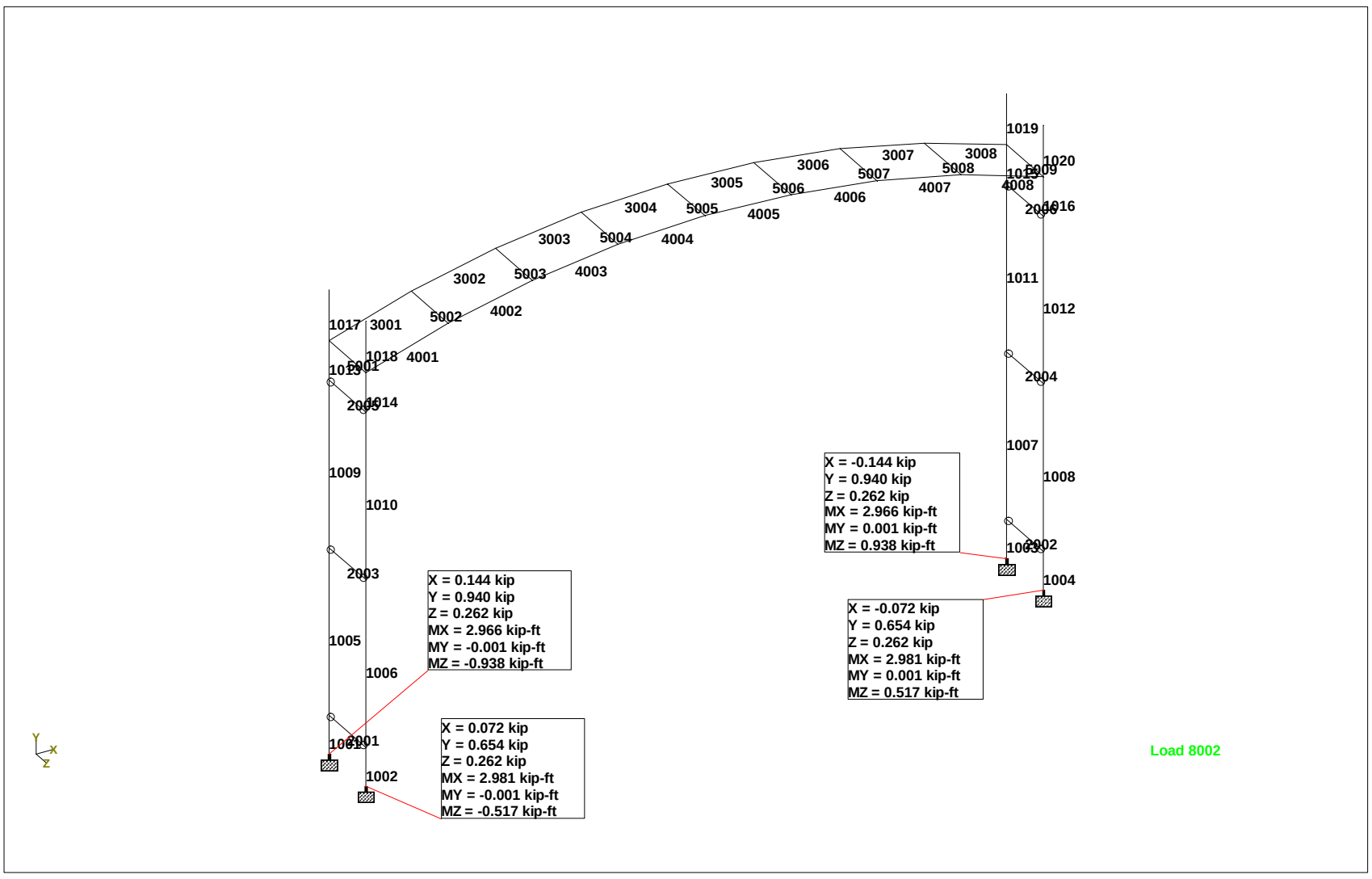

*Reactions: strength level (1.2*DL + 1.0*WL)*

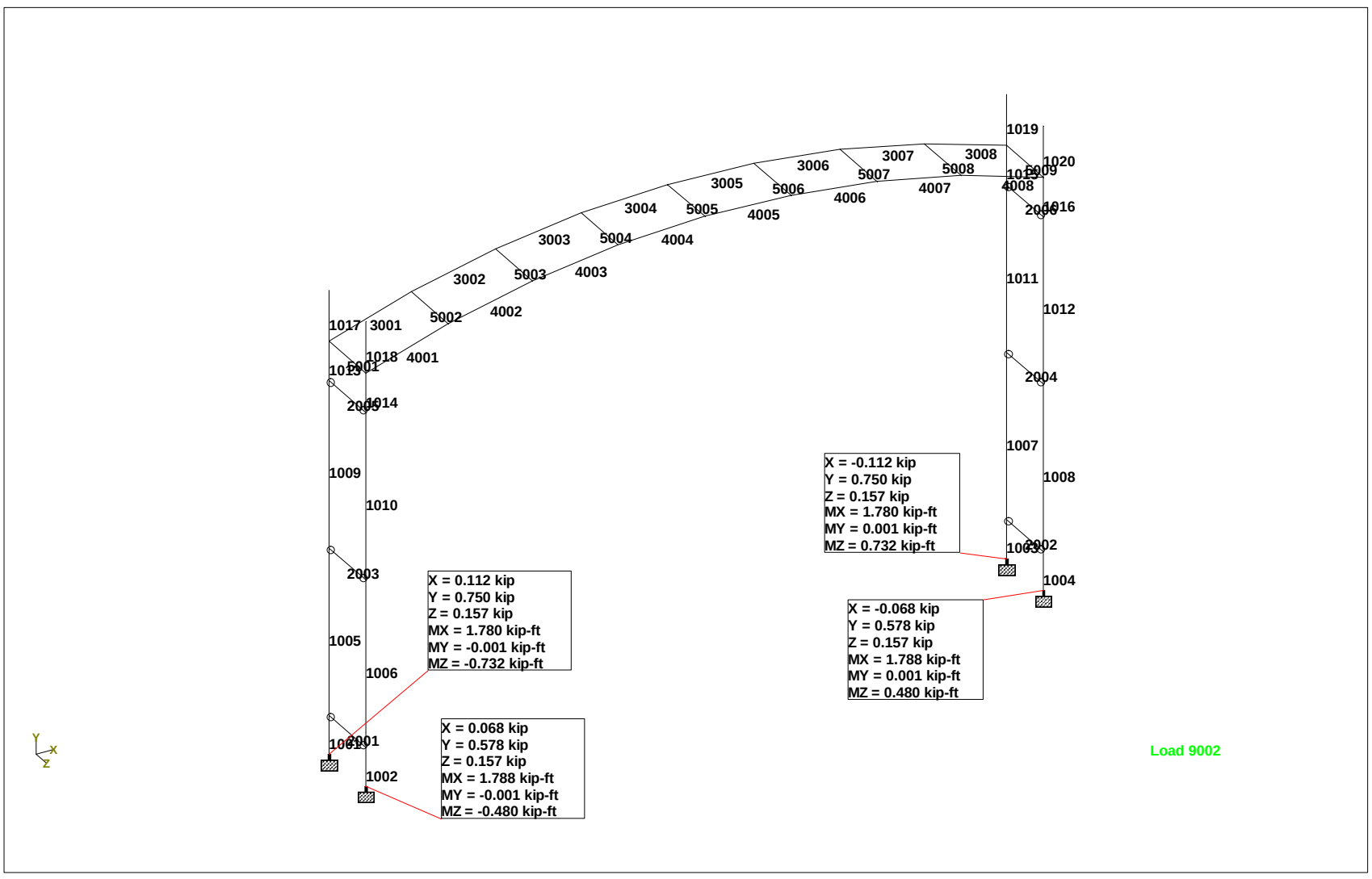

*Reactions: service level (1.0*DL + 0.6*WL)*

Nodes

Node	X (ft)	Y (ft)	Z (ft)
101	0.000	0.000	0.000
102	0.000	0.000	2.167
103	23.000	0.000	0.000
104	23.000	0.000	2.167
201	0.000	1.330	0.000
202	0.000	1.330	2.167
203	23.000	1.330	0.000
204	23.000	1.330	2.167
301	0.000	7.000	0.000
302	0.000	7.000	2.167
303	23.000	7.000	0.000
304	23.000	7.000	2.167
401	0.000	12.670	0.000
402	0.000	12.670	2.167
403	23.000	12.670	0.000
404	23.000	12.670	2.167
501	0.000	14.010	0.000

Nodes Cont...

Node	X (ft)	Y (ft)	Z (ft)
502	0.000	14.010	2.167
503	23.000	14.010	0.000
504	23.000	14.010	2.167
601	0.000	15.750	0.000
602	0.000	15.750	2.167
603	23.000	15.750	0.000
604	23.000	15.750	2.167
701	2.800	14.880	0.000
702	5.664	15.507	0.000
703	8.571	15.884	0.000
704	11.500	16.010	0.000
705	14.429	15.884	0.000
706	17.336	15.507	0.000
707	20.200	14.880	0.000
801	2.800	14.880	2.167
802	5.664	15.507	2.167
803	8.571	15.884	2.167
804	11.500	16.010	2.167
805	14.429	15.884	2.167
806	17.336	15.507	2.167
807	20.200	14.880	2.167

Beams

Beam	Node A	Node B	Length (ft)	Property	β (degrees)
1001	101	201	1.330	1	90
1002	102	202	1.330	1	90
1003	103	203	1.330	1	90
1004	104	204	1.330	1	90
1005	201	301	5.670	1	90
1006	202	302	5.670	1	90
1007	203	303	5.670	1	90
1008	204	304	5.670	1	90
1009	301	401	5.670	1	90
1010	302	402	5.670	1	90
1011	303	403	5.670	1	90
1012	304	404	5.670	1	90
1013	401	501	1.341	1	90
1014	402	502	1.341	1	90
1015	403	503	1.341	1	90
1016	404	504	1.341	1	90
1017	501	601	1.740	1	90
1018	502	602	1.740	1	90

Beams Cont...

Beam	Node A	Node B	Length (ft)	Property	β (degrees)
1019	503	603	1.740	1	90
1020	504	604	1.740	1	90
2001	201	202	2.167	1	0
2002	203	204	2.167	1	0
2003	301	302	2.167	1	0
2004	303	304	2.167	1	0
2005	401	402	2.167	1	0
2006	403	404	2.167	1	0
3001	501	701	2.932	2	0
3002	701	702	2.932	2	0
3003	702	703	2.932	2	0
3004	703	704	2.932	2	0
3005	704	705	2.932	2	0
3006	705	706	2.932	2	0
3007	706	707	2.932	2	0
3008	707	503	2.932	2	0
4001	502	801	2.932	2	0
4002	801	802	2.932	2	0
4003	802	803	2.932	2	0
4004	803	804	2.932	2	0
4005	804	805	2.932	2	0
4006	805	806	2.932	2	0
4007	806	807	2.932	2	0
4008	807	504	2.932	2	0
5001	501	502	2.167	3	0
5002	701	801	2.167	3	0
5003	702	802	2.167	3	0
5004	703	803	2.167	3	0
5005	704	804	2.167	3	0
5006	705	805	2.167	3	0
5007	706	806	2.167	3	0
5008	707	807	2.167	3	0
5009	503	504	2.167	3	0

Section Properties

Prop	Section	Area (in^2)	I_{yy} (in^4)	I_{zz} (in^4)	J (in^4)	Material
1	W8X24	7.080	18.300	82.700	0.314	STEEL
2	HSST3X2X0.25	1.970	1.110	2.130	2.457	STEEL
3	HSSP1.660X0.14	0.625	0.184	0.184	0.368	STEEL

Materials

Mat	Name	E (kip/in^2)	ν	Density (kip/in^3)	α (/°F)
1	STEEL	29E+3	0.300	0.000	6E -6
2	STAINLESSSTEEL	28E+3	0.300	0.000	10E -6
3	ALUMINUM	10E+3	0.330	0.000	13E -6
4	CONCRETE	3.15E+3	0.170	0.000	5E -6

Supports

Node	X (kip/in)	Y (kip/in)	Z (kip/in)	rX (kip-ft/deg)	rY (kip-ft/deg)	rZ (kip-ft/deg)
101	Fixed	Fixed	Fixed	Fixed	Fixed	Fixed
102	Fixed	Fixed	Fixed	Fixed	Fixed	Fixed
103	Fixed	Fixed	Fixed	Fixed	Fixed	Fixed
104	Fixed	Fixed	Fixed	Fixed	Fixed	Fixed

Releases

Beam ends not shown in this table are fixed in all directions.

Beam	Node	x	y	z	rx	ry	rz
2001	201	Fixed	Fixed	Fixed	Fixed	Fixed	Pin
2001	202	Fixed	Fixed	Fixed	Fixed	Fixed	Pin
2002	203	Fixed	Fixed	Fixed	Fixed	Fixed	Pin
2002	204	Fixed	Fixed	Fixed	Fixed	Fixed	Pin
2003	301	Fixed	Fixed	Fixed	Fixed	Fixed	Pin
2003	302	Fixed	Fixed	Fixed	Fixed	Fixed	Pin
2004	303	Fixed	Fixed	Fixed	Fixed	Fixed	Pin
2004	304	Fixed	Fixed	Fixed	Fixed	Fixed	Pin
2005	401	Fixed	Fixed	Fixed	Fixed	Fixed	Pin
2005	402	Fixed	Fixed	Fixed	Fixed	Fixed	Pin
2006	403	Fixed	Fixed	Fixed	Fixed	Fixed	Pin
2006	404	Fixed	Fixed	Fixed	Fixed	Fixed	Pin

Primary Load Cases

Number	Name	Type
1001	LC1001: DL	Dead
2001	LC2001: WL	Wind

Combination Load Cases

Comb.	Combination L/C Name	Primary	Primary L/C Name	Factor
8001	STR1:1.4*DL	1001	LC1001: DL	1.40
8002	STR2:1.2*DL+1.0*WL	1001	LC1001: DL	1.20
		2001	LC2001: WL	1.00
8003	STR3:0.9*DL+1.0*WL	1001	LC1001: DL	0.90
		2001	LC2001: WL	1.00
9001	SER1:1.0*DL	1001	LC1001: DL	1.00
9002	SER2:1.0*DL+0.6*WL	1001	LC1001: DL	1.00
		2001	LC2001: WL	0.60
9003	SER3:0.6*DL+0.6*WL	1001	LC1001: DL	0.60
		2001	LC2001: WL	0.60

Reactions

		Horizontal	Vertical	Horizontal	Moment		
Node	L/C	FX (kip)	FY (kip)	FZ (kip)	MX (kip-ft)	MY (kip-ft)	MZ (kip-ft)
101	1001:LC1001: I	0.090	0.664	0.000	-0.000	-0.000	-0.606
	2001:LC2001: \	0.036	0.143	0.262	2.966	-0.001	-0.211
	8001:STR1:1.4	0.126	0.930	0.000	-0.000	-0.000	-0.848
	8002:STR2:1.2	0.144	0.940	0.262	2.966	-0.001	-0.938
	8003:STR3:0.9	0.117	0.741	0.262	2.966	-0.001	-0.756
	9001:SER1:1.0	0.090	0.664	0.000	-0.000	-0.000	-0.606
	9002:SER2:1.0	0.112	0.750	0.157	1.780	-0.001	-0.732
	9003:SER3:0.6	0.076	0.484	0.157	1.780	-0.001	-0.490
102	1001:LC1001: I	0.090	0.664	-0.000	0.000	0.000	-0.606
	2001:LC2001: \	-0.036	-0.143	0.262	2.981	-0.001	0.211
	8001:STR1:1.4	0.126	0.930	-0.000	0.000	0.000	-0.848
	8002:STR2:1.2	0.072	0.654	0.262	2.981	-0.001	-0.517
	8003:STR3:0.9	0.045	0.455	0.262	2.981	-0.001	-0.335
	9001:SER1:1.0	0.090	0.664	-0.000	0.000	0.000	-0.606
	9002:SER2:1.0	0.068	0.578	0.157	1.788	-0.001	-0.480
	9003:SER3:0.6	0.032	0.313	0.157	1.788	-0.001	-0.237
103	1001:LC1001: I	-0.090	0.664	0.000	-0.000	0.000	0.606
	2001:LC2001: \	-0.036	0.143	0.262	2.966	0.001	0.211
	8001:STR1:1.4	-0.126	0.930	0.000	-0.000	0.000	0.848
	8002:STR2:1.2	-0.144	0.940	0.262	2.966	0.001	0.938
	8003:STR3:0.9	-0.117	0.741	0.262	2.966	0.001	0.756
	9001:SER1:1.0	-0.090	0.664	0.000	-0.000	0.000	0.606
	9002:SER2:1.0	-0.112	0.750	0.157	1.780	0.001	0.732
	9003:SER3:0.6	-0.076	0.484	0.157	1.780	0.001	0.490
104	1001:LC1001: I	-0.090	0.664	-0.000	0.000	-0.000	0.606
	2001:LC2001: \	0.036	-0.143	0.262	2.981	0.001	-0.211
	8001:STR1:1.4	-0.126	0.930	-0.000	0.000	-0.000	0.848
	8002:STR2:1.2	-0.072	0.654	0.262	2.981	0.001	0.517

Reactions Cont...

Node	L/C	Horizontal FX (kip)	Vertical FY (kip)	Horizontal FZ (kip)	Moment MX (kip-ft)	MY (kip-ft)	MZ (kip-ft)
	8003:STR3:0.9	-0.045	0.455	0.262	2.981	0.001	0.335
	9001:SER1:1.0	-0.090	0.664	-0.000	0.000	-0.000	0.606
	9002:SER2:1.0	-0.068	0.578	0.157	1.788	0.001	0.480
	9003:SER3:0.6	-0.032	0.313	0.157	1.788	0.001	0.237

Reaction Summary

	Node	L/C	Horizontal FX (kip)	Vertical FY (kip)	Horizontal FZ (kip)	Moment MX (kip-ft)	MY (kip-ft)	MZ (kip-ft)
Max FX	101	8002:STR2:1.2	**0.144**	0.940	0.262	2.966	-0.001	-0.938
Min FX	103	8002:STR2:1.2	**-0.144**	0.940	0.262	2.966	0.001	0.938
Max FY	101	8002:STR2:1.2	0.144	**0.940**	0.262	2.966	-0.001	-0.938
Min FY	102	2001:LC2001: '	-0.036	**-0.143**	0.262	2.981	-0.001	0.211
Max FZ	102	2001:LC2001: '	-0.036	-0.143	**0.262**	2.981	-0.001	0.211
Min FZ	102	8001:STR1:1.4	0.126	0.930	**-0.000**	0.000	0.000	-0.848
Max MX	102	8002:STR2:1.2	0.072	0.654	0.262	**2.981**	-0.001	-0.517
Min MX	101	8001:STR1:1.4	0.126	0.930	0.000	**-0.000**	-0.000	-0.848
Max MY	104	2001:LC2001: '	0.036	-0.143	0.262	2.981	**0.001**	-0.211
Min MY	101	2001:LC2001: '	0.036	0.143	0.262	2.966	**-0.001**	-0.211
Max MZ	103	8002:STR2:1.2	-0.144	0.940	0.262	2.966	0.001	**0.938**
Min MZ	101	8002:STR2:1.2	0.144	0.940	0.262	2.966	-0.001	**-0.938**

Utilization Ratio

Beam	Analysis Property	Design Property	Actual Ratio	Allowable Ratio	Ratio (Act./Allow.)	Clause	L/C	Ax (in^2)	Iz (in^4)	Iy (in^4)	Ix (in^4)
1001	W8X24	W8X24	0.102	1.000	0.102	DEFLECTION	003	7.080	82.700	18.300	0.346
1002	W8X24	W8X24	0.071	1.000	0.071	DEFLECTION	003	7.080	82.700	18.300	0.346
1003	W8X24	W8X24	0.091	1.000	0.091	DEFLECTION	003	7.080	82.700	18.300	0.346
1004	W8X24	W8X24	0.071	1.000	0.071	DEFLECTION	003	7.080	82.700	18.300	0.346
1005	W8X24	W8X24	0.091	1.000	0.091	DEFLECTION	003	7.080	82.700	18.300	0.346
1006	W8X24	W8X24	0.071	1.000	0.071	DEFLECTION	003	7.080	82.700	18.300	0.346
1007	W8X24	W8X24	0.091	1.000	0.091	DEFLECTION	003	7.080	82.700	18.300	0.346
1008	W8X24	W8X24	0.071	1.000	0.071	DEFLECTION	003	7.080	82.700	18.300	0.346
1009	W8X24	W8X24	0.091	1.000	0.091	DEFLECTION	003	7.080	82.700	18.300	0.346
1010	W8X24	W8X24	0.071	1.000	0.071	DEFLECTION	003	7.080	82.700	18.300	0.346
1011	W8X24	W8X24	0.091	1.000	0.091	DEFLECTION	003	7.080	82.700	18.300	0.346
1012	W8X24	W8X24	0.071	1.000	0.071	DEFLECTION	003	7.080	82.700	18.300	0.346
1013	W8X24	W8X24	0.091	1.000	0.091	DEFLECTION	003	7.080	82.700	18.300	0.346
1014	W8X24	W8X24	0.071	1.000	0.071	DEFLECTION	003	7.080	82.700	18.300	0.346
1015	W8X24	W8X24	0.091	1.000	0.091	DEFLECTION	003	7.080	82.700	18.300	0.346
1016	W8X24	W8X24	0.071	1.000	0.071	DEFLECTION	003	7.080	82.700	18.300	0.346

Utilization Ratio Cont...

Beam	Analysis Property	Design Property	Actual Ratio	Allowable Ratio	Ratio (Act./Allow.)	Clause	L/C	Ax (in^2)	Iz (in^4)	Iy (in^4)	Ix (in^4)
1017	W8X24	W8X24	0.091	1.000	0.091	DEFLECTION	003	7.080	82.700	18.300	0.346
1018	W8X24	W8X24	0.071	1.000	0.071	DEFLECTION	003	7.080	82.700	18.300	0.346
1019	W8X24	W8X24	0.091	1.000	0.091	DEFLECTION	003	7.080	82.700	18.300	0.346
1020	W8X24	W8X24	0.071	1.000	0.071	DEFLECTION	003	7.080	82.700	18.300	0.346
2001	W8X24	W8X24	0.001	1.000	0.001	Sec. G2.1(a)	001	7.080	82.700	18.300	0.346
2002	W8X24	W8X24	0.001	1.000	0.001	DEFLECTION	003	7.080	82.700	18.300	0.346
2003	W8X24	W8X24	0.001	1.000	0.001	Sec. G2.1(a)	001	7.080	82.700	18.300	0.346
2004	W8X24	W8X24	0.001	1.000	0.001	DEFLECTION	003	7.080	82.700	18.300	0.346
2005	W8X24	W8X24	0.001	1.000	0.001	Eq. H1-1b	003	7.080	82.700	18.300	0.346
2006	W8X24	W8X24	0.001	1.000	0.001	Eq. H1-1b	003	7.080	82.700	18.300	0.346
3001	HSST3X2X0	HSST3X2X0	0.344	1.000	0.344	DEFLECTION	003	1.970	2.130	1.110	2.520
3002	HSST3X2X0	HSST3X2X0	0.086	1.000	0.086	Eq. H1-1b	002	1.970	2.130	1.110	2.520
3003	HSST3X2X0	HSST3X2X0	0.164	1.000	0.164	DEFLECTION	003	1.970	2.130	1.110	2.520
3004	HSST3X2X0	HSST3X2X0	0.252	1.000	0.252	DEFLECTION	003	1.970	2.130	1.110	2.520
3005	HSST3X2X0	HSST3X2X0	0.252	1.000	0.252	DEFLECTION	003	1.970	2.130	1.110	2.520
3006	HSST3X2X0	HSST3X2X0	0.164	1.000	0.164	DEFLECTION	003	1.970	2.130	1.110	2.520
3007	HSST3X2X0	HSST3X2X0	0.086	1.000	0.086	Eq. H1-1b	002	1.970	2.130	1.110	2.520
3008	HSST3X2X0	HSST3X2X0	0.344	1.000	0.344	DEFLECTION	003	1.970	2.130	1.110	2.520
4001	HSST3X2X0	HSST3X2X0	0.293	1.000	0.293	DEFLECTION	003	1.970	2.130	1.110	2.520
4002	HSST3X2X0	HSST3X2X0	0.080	1.000	0.080	Eq. H1-1b	002	1.970	2.130	1.110	2.520
4003	HSST3X2X0	HSST3X2X0	0.132	1.000	0.132	DEFLECTION	003	1.970	2.130	1.110	2.520
4004	HSST3X2X0	HSST3X2X0	0.219	1.000	0.219	DEFLECTION	003	1.970	2.130	1.110	2.520
4005	HSST3X2X0	HSST3X2X0	0.219	1.000	0.219	DEFLECTION	003	1.970	2.130	1.110	2.520
4006	HSST3X2X0	HSST3X2X0	0.132	1.000	0.132	DEFLECTION	003	1.970	2.130	1.110	2.520
4007	HSST3X2X0	HSST3X2X0	0.080	1.000	0.080	Eq. H1-1b	002	1.970	2.130	1.110	2.520
4008	HSST3X2X0	HSST3X2X0	0.293	1.000	0.293	DEFLECTION	003	1.970	2.130	1.110	2.520
5001	HSSP1.660X	N/A						0.625	0.184	0.184	0.368
5002	HSSP1.660X	N/A						0.625	0.184	0.184	0.368
5003	HSSP1.660X	N/A						0.625	0.184	0.184	0.368
5004	HSSP1.660X	N/A						0.625	0.184	0.184	0.368
5005	HSSP1.660X	N/A						0.625	0.184	0.184	0.368
5006	HSSP1.660X	N/A						0.625	0.184	0.184	0.368
5007	HSSP1.660X	N/A						0.625	0.184	0.184	0.368
5008	HSSP1.660X	N/A						0.625	0.184	0.184	0.368
5009	HSSP1.660X	N/A						0.625	0.184	0.184	0.368

FOUNDATION DESIGN

FOUNDATION ANALYSIS & DESIGN (ACI318)

Tedds calculation version 3.2.06

FOOTING ANALYSIS

Length of foundation	L_x = **4** ft
Width of foundation	L_y = **6.25** ft
Foundation area	$A = L_x \times L_y$ = **25** ft^2
Depth of foundation	h = **24** in
Depth of soil over foundation	h_{soil} = **0** in
Density of concrete	γ_{conc} = **150.0** lb/ft^3

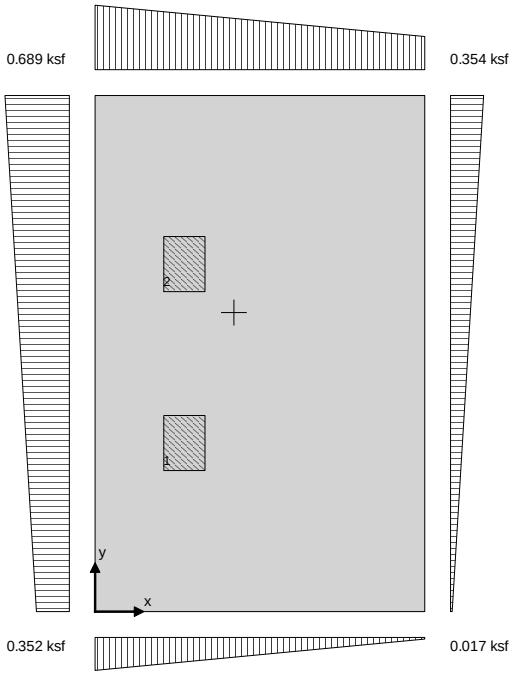

Column no.1 details

Length of column	l_{x1} = **6.00** in
Width of column	l_{y1} = **8.00** in
position in x-axis	x_1 = **13.00** in
position in y-axis	y_1 = **24.50** in

Column no.2 details

Length of column	l_{x2} = **6.00** in
Width of column	l_{y2} = **8.00** in
position in x-axis	x_2 = **13.00** in
position in y-axis	y_2 = **50.50** in

Soil properties

Gross allowable bearing pressure	q_{allow_Gross} = **1.5** ksf
Density of soil	γ_{soil} = **120.0** lb/ft^3

Angle of internal friction ϕ_b = **30.0** deg

Design base friction angle δ_{bb} = **30.0** deg

Coefficient of base friction $\tan(\delta_{bb})$ = **0.577**

Foundation loads

Self weight $F_{swt} = h \times \gamma_{conc}$ = **300** psf

Column no.1 loads

Dead load in z F_{Dz1} = **0.7** kips

Wind load in z F_{Wz1} = **-0.1** kips

Dead load in x F_{Dx1} = **-0.1** kips

Wind load in x F_{Wx1} = **0.0** kips

Wind load in y F_{Wy1} = **0.3** kips

Dead load moment in x M_{Dx1} = **-0.6** kip_ft

Wind load moment in x M_{Wx1} = **0.2** kip_ft

Wind load moment in y M_{Wy1} = **3.0** kip_ft

Column no.2 loads

Dead load in z F_{Dz2} = **0.7** kips

Wind load in z F_{Wz2} = **0.1** kips

Dead load in x F_{Dx2} = **-0.1** kips

Wind load in x F_{Wx2} = **0.0** kips

Wind load in y F_{Wy2} = **0.3** kips

Dead load moment in x M_{Dx2} = **-0.6** kip_ft

Wind load moment in x M_{Wx2} = **-0.2** kip_ft

Wind load moment in y M_{Wy2} = **3.0** kip_ft

Footing analysis for soil and stability

Load combinations per ASCE 7-10

1.0D (0.347)

1.0D + 0.6W (0.459)

Combination 1 results: 1.0D

Forces on foundation

Force in x-axis $F_{dx} = \gamma_D \times F_{Dx1} + \gamma_D \times F_{Dx2}$ = **-0.2** kips

Force in z-axis $F_{dz} = \gamma_D \times A \times F_{swt} + \gamma_D \times F_{Dz1} + \gamma_D \times F_{Dz2}$ = **8.8** kips

Moments on foundation

Moment in x-axis, about x is 0 $M_{dx} = \gamma_D \times A \times F_{swt} \times L_x / 2 + \gamma_D \times (F_{Dz1} \times x_1 + M_{Dx1} + F_{Dx1} \times h) + \gamma_D \times (F_{Dz2} \times x_2 + M_{Dx2} + F_{Dx2} \times h)$ = **14.9** kip_ft

Moment in y-axis, about y is 0 $M_{dy} = \gamma_D \times A \times F_{swt} \times L_y / 2 + \gamma_D \times (F_{Dz1} \times y_1) + \gamma_D \times (F_{Dz2} \times y_2)$ = **27.6** kip_ft

Uplift verification

Vertical force F_{dz} = **8.828** kips

PASS - Foundation is not subject to uplift

Stability against overturning in x direction, moment about x is 0

Overturning moment $M_{OTx0} = \gamma_D \times (M_{Dx1} + F_{Dx1} \times h) + \gamma_D \times (M_{Dx2} + F_{Dx2} \times h)$ = **-1.57** kip_ft

Resisting moment $M_{Rx0} = \gamma_D \times A \times F_{swt} \times L_x / 2 + \gamma_D \times (F_{Dz1} \times x_1) + \gamma_D \times (F_{Dz2} \times x_2)$ = **16.44** kip_ft

Factor of safety $\mathrm{abs}(M_{Rx0} / M_{OTx0})$ = **10.457**

PASS - Overturning moment safety factor exceeds the minimum of 1.00

Stability against sliding

Resistance due to base friction $F_{RFriction} = \max(F_{dz}, 0\ kN) \times \tan(\delta_{bb})$ = **5.097** kips

Stability against sliding in x direction

Total sliding resistance $F_{Rx} = F_{RFriction}$ = **5.097** kips

Factor of safety $abs(F_{Rx} / F_{dx})$ = **28.32**

PASS - Sliding factor of safety exceeds the minimum of 1.00

Bearing resistance

Eccentricity of base reaction

Eccentricity of base reaction in x-axis $e_{dx} = M_{dx} / F_{dz} - L_x / 2$ = **-3.792** in

Eccentricity of base reaction in y-axis $e_{dy} = M_{dy} / F_{dz} - L_y / 2$ = **0** in

Pad base pressures

$q_1 = F_{dz} \times (1 - 6 \times e_{dx} / L_x - 6 \times e_{dy} / L_y) / (L_x \times L_y)$ = **0.52** ksf

$q_2 = F_{dz} \times (1 - 6 \times e_{dx} / L_x + 6 \times e_{dy} / L_y) / (L_x \times L_y)$ = **0.52** ksf

$q_3 = F_{dz} \times (1 + 6 \times e_{dx} / L_x - 6 \times e_{dy} / L_y) / (L_x \times L_y)$ = **0.186** ksf

$q_4 = F_{dz} \times (1 + 6 \times e_{dx} / L_x + 6 \times e_{dy} / L_y) / (L_x \times L_y)$ = **0.186** ksf

Minimum base pressure $q_{min} = \min(q_1,q_2,q_3,q_4)$ = **0.186** ksf

Maximum base pressure $q_{max} = \max(q_1,q_2,q_3,q_4)$ = **0.52** ksf

Allowable bearing capacity

Allowable bearing capacity $q_{allow} = q_{allow_Gross}$ = **1.5** ksf

q_{max} / q_{allow} = **0.347**

PASS - Allowable bearing capacity exceeds design base pressure

Footing analysis for soil and stability

Combination 9 results: 1.0D + 0.6W

Forces on foundation

Force in x-axis $F_{dx} = \gamma_D \times F_{Dx1} + \gamma_W \times F_{Wx1} + \gamma_D \times F_{Dx2} + \gamma_W \times F_{Wx2}$ = **-0.2** kips

Force in y-axis $F_{dy} = \gamma_W \times F_{Wy1} + \gamma_W \times F_{Wy2}$ = **0.3** kips

Force in z-axis $F_{dz} = \gamma_D \times A \times F_{swt} + \gamma_D \times F_{Dz1} + \gamma_W \times F_{Wz1} + \gamma_D \times F_{Dz2} + \gamma_W \times F_{Wz2}$ = **8.8** kips

Moments on foundation

Moment in x-axis, about x is 0 $M_{dx} = \gamma_D \times A \times F_{swt} \times L_x / 2 + \gamma_D \times (F_{Dz1} \times x_1+M_{Dx1}+F_{Dx1} \times h) + \gamma_W \times (F_{Wz1} \times x_1+M_{Wx1}+F_{Wx1} \times h) + \gamma_D \times (F_{Dz2} \times x_2+M_{Dx2}+F_{Dx2} \times h) + \gamma_W \times (F_{Wz2} \times x_2+M_{Wx2}+F_{Wx2} \times h)$ = **14.9** kip_ft

Moment in y-axis, about y is 0 $M_{dy} = \gamma_D \times A \times F_{swt} \times L_y / 2 + \gamma_D \times (F_{Dz1} \times y_1) + \gamma_W \times (F_{Wz1} \times y_1+M_{Wy1}+F_{Wy1} \times h) + \gamma_D \times (F_{Dz2} \times y_2) + \gamma_W \times (F_{Wz2} \times y_2+M_{Wy2}+F_{Wy2} \times h)$ = **32.0** kip_ft

Uplift verification

Vertical force F_{dz} = **8.828** kips

PASS - Foundation is not subject to uplift

Stability against overturning in x direction, moment about x is 0

Overturning moment $M_{OTx0} = \gamma_D \times (M_{Dx1}+F_{Dx1} \times h) + \gamma_W \times (F_{Wz1} \times x_1) + \gamma_D \times (M_{Dx2}+F_{Dx2} \times h) + \gamma_W \times (M_{Wx2}+F_{Wx2} \times h)$ = **-1.83** kip_ft

Resisting moment $M_{Rx0} = \gamma_D \times A \times F_{swt} \times L_x / 2 + \gamma_D \times (F_{Dz1} \times x_1) + \gamma_W \times (M_{Wx1}+F_{Wx1} \times h) + \gamma_D \times (F_{Dz2} \times x_2) + \gamma_W \times (F_{Wz2} \times x_2)$ = **16.7** kip_ft

Factor of safety $abs(M_{Rx0} / M_{OTx0})$ = **9.103**

PASS - Overturning moment safety factor exceeds the minimum of 1.00

Stability against overturning in x direction, moment about x is L_x

Overturning moment $M_{OTxL} = \gamma_W \times (F_{Wz1} \times (x_1 - L_x)+M_{Wx1}+F_{Wx1} \times h)$ = **0.42** kip_ft

Resisting moment $M_{RxL} = -1 \times (\gamma_D \times A \times F_{swt} \times L_x / 2) + \gamma_D \times (F_{Dz1} \times (x_1 - L_x)+M_{Dx1}+F_{Dx1} \times h) + \gamma_D \times (F_{Dz2} \times (x_2 - L_x)+M_{Dx2}+F_{Dx2} \times h) + \gamma_W \times (F_{Wz2} \times (x_2 - L_x)+M_{Wx2}+F_{Wx2} \times h)$ = **-20.87** kip_ft

Factor of safety $abs(M_{RxL} / M_{OTxL})$ = **49.674**

PASS - Overturning moment safety factor exceeds the minimum of 1.00

Stability against overturning in y direction, moment about y is 0

Overturning moment $M_{OTy0} = \gamma_W \times (F_{Wz1} \times y_1)$ = **-0.18** kip_ft

Resisting moment $M_{Ry0} = \gamma_D \times A \times F_{swt} \times L_y / 2 + \gamma_D \times (F_{Dz1} \times y_1) + \gamma_W \times (M_{Wy1}+F_{Wy1} \times h) + \gamma_D \times (F_{Dz2} \times y_2) + \gamma_W \times (F_{Wz2} \times y_2+M_{Wy2}+F_{Wy2} \times h)$ = **32.15** kip_ft

Factor of safety $abs(M_{Ry0} / M_{OTy0})$ = **183.505**

PASS - Overturning moment safety factor exceeds the minimum of 1.00

Stability against overturning in y direction, moment about y is L_y

Overturning moment $M_{OTyL} = \gamma_W \times (F_{Wz1} \times (y_1 - L_y)+M_{Wy1}+F_{Wy1} \times h) + \gamma_W \times (M_{Wy2}+F_{Wy2} \times h)$ = **4.56** kip_ft

Resisting moment $M_{RyL} = -1 \times (\gamma_D \times A \times F_{swt} \times L_y / 2) + \gamma_D \times (F_{Dz1} \times (y_1 - L_y)) + \gamma_D \times (F_{Dz2} \times (y_2 - L_y)) + \gamma_W \times (F_{Wz2} \times (y_2 - L_y))$ = **-27.76** kip_ft

Factor of safety $abs(M_{RyL} / M_{OTyL})$ = **6.091**

PASS - Overturning moment safety factor exceeds the minimum of 1.00

Stability against sliding

Resistance due to base friction $F_{RFriction} = max(F_{dz}, 0\ kN) \times tan(\delta_{bb})$ = **5.097** kips

Resultant horizontal force $F_{dr} = \sqrt{(F_{dx}^2 + F_{dy}^2)}$ = **0.362** kips

Total sliding resistance $F_{Rr} = F_{RFriction}$ = **5.097** kips

Factor of safety $abs(F_{Rr} / F_{dr})$ = **14.069**

PASS - Sliding factor of safety exceeds the minimum of 1.00

Bearing resistance

Eccentricity of base reaction

Eccentricity of base reaction in x-axis $e_{dx} = M_{dx} / F_{dz} - L_x / 2$ = **-3.792** in

Eccentricity of base reaction in y-axis $e_{dy} = M_{dy} / F_{dz} - L_y / 2$ = **5.958** in

Pad base pressures

$q_1 = F_{dz} \times (1 - 6 \times e_{dx} / L_x - 6 \times e_{dy} / L_y) / (L_x \times L_y)$ = **0.352** ksf

$q_2 = F_{dz} \times (1 - 6 \times e_{dx} / L_x + 6 \times e_{dy} / L_y) / (L_x \times L_y)$ = **0.689** ksf

$q_3 = F_{dz} \times (1 + 6 \times e_{dx} / L_x - 6 \times e_{dy} / L_y) / (L_x \times L_y)$ = **0.017** ksf

$q_4 = F_{dz} \times (1 + 6 \times e_{dx} / L_x + 6 \times e_{dy} / L_y) / (L_x \times L_y)$ = **0.354** ksf

Minimum base pressure $q_{min} = min(q_1,q_2,q_3,q_4)$ = **0.017** ksf

Maximum base pressure $q_{max} = max(q_1,q_2,q_3,q_4)$ = **0.689** ksf

Allowable bearing capacity

Allowable bearing capacity

$q_{allow} = q_{allow_Gross} =$ **1.5** ksf

$q_{max} / q_{allow} =$ **0.459**

PASS - Allowable bearing capacity exceeds design base pressure

BASE PLATE &
ANCHOR BOLT DESIGN

Tekla Tedds	Project Whiskey Row Sign Structure				Job Ref.	
	Section				Sheet no./rev. 1	
	Calc. by CHG	Date 10/18/19	Chk'd by DJL	Date 10/23/19	App'd by	Date

COLUMN BASE PLATE DESIGN

In accordance with AISC 360-10

Tedds calculation version 2.1.01

Bolt diameter - 0.5"
Bolt embedment - 12.0"
Flange/base weld - 0.3"
Web/base weld - 0.3"

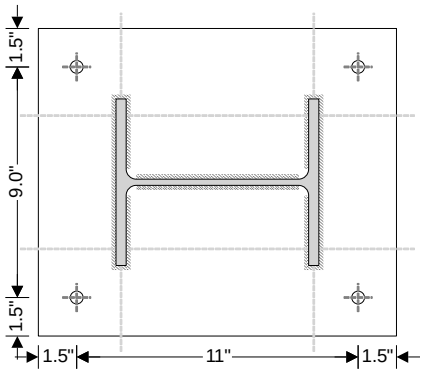

Plan on baseplate

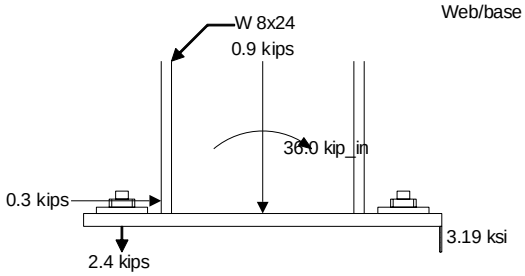

Elevation on baseplate

Design forces and moments

Axial force	P_u = **0.9** kips (Compression)
Bending moment	M_u = **36.0** kip_in
Shear force	F_v = **0.3** kips
Eccentricity	e = ABS(M_u / P_u) = **38.298** in
Anchor bolt to center of plate	f = N/2 - e_1 = **5.500** in

Column details

Column section	W 8x24
Depth	d = **7.930** in
Breadth	b_f = **6.500** in
Flange thickness	t_f = **0.400** in
Web thickness	t_w = **0.245** in

Baseplate details

Depth	N = **14.000** in
Breadth	B = **12.000** in
Thickness	t_p = **0.500** in
Design strength	F_y = **36.0** ksi

Foundation geometry

Member thickness	h_a = **24.000** in
Dist center of baseplate to left edge foundation	x_{ce1} = **13.000** in
Dist center of baseplate to right edge foundation	x_{ce2} = **35.000** in
Dist center of baseplate to bot edge foundation	y_{ce1} = **18.000** in
Dist center of baseplate to top edge foundation	y_{ce2} = **30.000** in

Holding down bolt and anchor plate details

Total number of bolts	N_{bolt} = **4**
Bolt diameter	d_o = **0.500** in
Bolt spacing	s_{bolt} = **9.000** in
Edge distance	e_1 = **1.500** in

Minimum tensile strength, base plate	F_y = **36** ksi
Minimum tensile strength, column	F_{yCol} = **50** ksi
Compressive strength of concrete	f'_c = **3** ksi
Strength reduction factors	
Compression	ϕ_c = **0.65**
Flexure	ϕ_b = **0.90**
Weld shear	ϕ_v = **0.75**
Plate cantilever dimensions	
Area of base plate	$A_1 = B \times N$ = **168.000** in^2
Maximum area of supporting surface	$A_2 = (N + 2 \times l_{min}) \times (B + 2 \times l_{min})$ = **624.000** in^2
Nominal strength of concrete under base plate	$P_p = 0.85 \times f'_c \times A_1 \times \min(\sqrt{(A_2 / A_1)}, 2)$ = **825.6** kips
Plate bending coefficient X	$X = (4 \times d \times b_f) / (d + b_f)^2 \times \min(1.0, P_u / (P_p \times \phi_c))$ = **0.00**
Plate bending coefficient λ	$\lambda_l = \min(1, 2 \times \sqrt{(X)} / (1 + \sqrt{(1 - X)}))$ = **0.04**
Bending line cantilever distance m	$m = (N - 0.95 \times d) / 2$ = **3.233** in
Bending line cantilever distance n	$n = (B - 0.8 \times b_f) / 2$ = **3.400** in
Yield line theory cantilever distance n'	$n' = \sqrt{(d \times b_f)} / 4$ = **1.795** in
Maximum bending line cantilever	$l = \max(m, n, \lambda_l \times n')$ = **3.400** in
Check eccentricity	
Maximum bearing stress	$f_{p,max} = 0.85 \times f'_c \times \phi_c \times \min(\sqrt{(A_2 / A_1)}, 2)$ = **3.19** ksi
Maximum bearing pressure	$q_{max} = f_{p,max} \times B$ = **38.33** kips/in
Critical eccentricity	$e_{crit} = N / 2 - P_u / (2 \times q_{max})$ = **6.988** in

$e > e_{crit}$ so loads cannot be resisted by bearing alone. Therefore consider as a large moment

Plate dimensions adequate as $(f + N/2)^2 >= (2 \times P_u \times (e + f))/q_{max}$ and a real solution for bearing length exists

Bearing length - quadratic solution 1	$Y_1 = (f + N/2) + \sqrt{((f + N/2)^2 - (2 \times P_u \times (e + f))/q_{max})}$ = **24.914** in
Bearing length - quadratic solution 2	$Y_2 = (f + N/2) - \sqrt{((f + N/2)^2 - (2 \times P_u \times (e + f))/q_{max})}$ = **0.086** in
Bearing length	$Y = \min(Y_1, Y_2)$ = **0.086** in
Tension force in bolts	$T_u = q_{max} \times Y - P_u$ = **2.4** kips
Max tension in single bolt	$T_{rod} = T_u / (N_{bolt}/2)$ = **1.2** kips
Base plate yielding limit at bearing interface	
Required plate thickness	$t_{p,req} = \sqrt{((4 \times f_{p,max} \times Y \times (l - Y/2))/(\phi_b \times F_y))}$ = **0.338** in

PASS - Thickness of plate exceeds required thickness

Base plate yielding limit at tension interface	
Distance from bolt CL to plate bending lines	$x = \mathrm{abs}(m - e_1)$ = **1.733** in
Plate thickness required	$t_{p,req} = 2.11 \times \sqrt{((T_u \times x)/(B \times F_y))}$ = **0.206** in

PASS - Thickness of plate exceeds required thickness

Combined tension and bending in anchor bolts	
Gross cross sectional area of anchor	$A_{bolt} = \pi \times d_a^2 / 4$ = **0.196** in^2
Thickness of washer	t_{wash} = **0.250** in
Shear stress in anchor	$f_v = F_v / (N_{boltV} \times A_{bolt})$ = **0.76** ksi
Lever arm	$z = t_p + t_{wash} / 2$ = **0.625** in
Bending in anchor	$M_l = F_v \times z / N_{boltV}$ = **0.01** kips_ft
Plastic modulus of anchor	$Z_{bolt} = d_a^3 / 6$ = **0.021** in^3

Stress in anchor due to bending $f_{tb} = M_l / Z_{bolt} =$ **4.5** ksi

Axial stress in anchor $f_{ta} = T_{rod} / A_{bolt} =$ **6.0** ksi

Tensile stress in anchor $f_t = f_{tb} + f_{ta} =$ **10.5** ksi

Nominal tensile stress of anchor (Table J3.2) $F_{nt} = 0.75 \times f_{uta} =$ **43.5** ksi

Nominal shear stress of anchor (Table J3.2) $F_{nv} = 0.45 \times f_{uta} =$ **26.1** ksi

Tensile stress of anchor $\phi F_{nt} = \phi \times F_{nt} =$ **32.6** ksi

Modified tensile stress (Eqn J3-3a) $\phi F'_{nt} = \min(\phi \times (1.3 \times F_{nt} - (F_{nt} / (\phi \times F_{nv})) \times f_v), \phi F_{nt}) =$ **32.6** ksi

PASS - Combined shear and bending resistance of rods exceed tensile stress in rods

Tension weld

Tension flange weld leg length $t_{wf} =$ **0.2500** in

Effective flange weld width $l_{Tweld,eff} = l_{Tweld,eff_ud} =$ **2** in

Tensile load per inch $R_{wf} = T_{rod} / l_{Tweld,eff} =$ **0.6** kips/in

Electrode classification number $F_{EXX} =$ **70.0** ksi

Design weld stress $\phi F_{nw} = \phi_v \times 0.60 \times F_{EXX} \times (1.0 + 0.5 \times (\sin(90deg))^{1.5}) =$ **47.250**ksi

Design strength of weld per in $\phi R_{nf} = \phi F_{nw} \times t_{wf} / \sqrt{(2)} =$ **8.4** kips/in

PASS - Available strength of weld exceeds force in tension weld

Local stress on flange $f_{T,local} = (T_{rod}) / (l_{Tweld,eff} \times t_f) =$ **1.478** ksi

Column flange allowable stress $F_{yCol} / 1.67 =$ **29.940** ksi

PASS - Local column capacity exceeds local column stress

Shear weld

Shear web weld leg length $t_{ww} =$ **0.2500** in

Shear web weld force per in $R_{wl} = F_v / (2 \times (d - 2 \times t_f)) =$ **0.021** kips/in

Electrode classification number $F_{EXX} =$ **70.0** ksi

Design weld stress $\phi F_{nw} = \phi_v \times 0.60 \times F_{EXX} \times (1.0 + 0.5 \times (\sin(0deg))^{1.5}) =$ **31.500**ksi

Design strength of weld per in $\phi R_{nl} = \phi F_{nw} \times t_{ww} / \sqrt{(2)} =$ **5.6** kips/in

PASS - Available strength of shear weld exceeds force in shear weld

ANCHOR BOLT DESIGN

In accordance with ACI318-14

Tedds calculation version 2.1.01

Anchor bolt geometry

Type of anchor bolt Cast-in headed end bolt anchor

Diameter of anchor bolt $d_a =$ **0.5** in

Number of bolts in x direction $N_{boltx} =$ **2**

Number of bolts in y direction $N_{bolty} =$ **2**

Total number of bolts $n_{total} = (N_{boltx} \times 2) + (N_{bolty} - 2) \times 2 =$ **4**

Total number of bolts in tension $n_{tens} = (N_{boltN} \times 2) + (N_{bolty} - 2) =$ **2**

Spacing of bolts in x direction $s_{boltx} =$ **11** in

Spacing of bolts in y direction $s_{bolty} =$ **9** in

Number of threads per inch $n_t =$ **13**

Effective cross-sectional area of anchor $A_{se} = \pi / 4 \times (d_a - 0.9743 \text{ in} / n_t)^2 =$ **0.142** in^2

Embedded depth of each anchor bolt $h_{ef} =$ **12** in

Material details

Minimum yield strength of steel $f_{ya} =$ **36** ksi

Nominal tensile strength of steel	f_{uta} = **58** ksi
Compressive strength of concrete	f'_c = **3** ksi
Concrete modification factor	λ = **1.00**
Modification factor for cast-in anchor concrete failure	
	$\lambda_a = 1.0 \times \lambda =$ **1.00**

Strength reduction factors

Tension of steel element	$\phi_{t,s}$ = **0.75**
Shear of steel element	$\phi_{v,s}$ = **0.65**
Concrete tension	$\phi_{t,c}$ = **0.65**
Concrete shear	$\phi_{v,c}$ = **0.70**
Concrete tension for pullout	$\phi_{t,cB}$ = **0.70**
Concrete shear for pryout	$\phi_{v,cB}$ = **0.70**

Steel strength of anchor in tension (17.4.1)

Nominal strength of anchor in tension	$N_{sa} = A_{se} \times f_{uta}$ = **8.23** kips
Steel strength of anchor in tension	$\phi N_{sa} = \phi_{t,s} \times N_{sa}$ = **6.17** kips

PASS - Steel strength of anchor exceeds max tension in single bolt

Check concrete breakout strength of anchor bolt in tension (17.4.2)

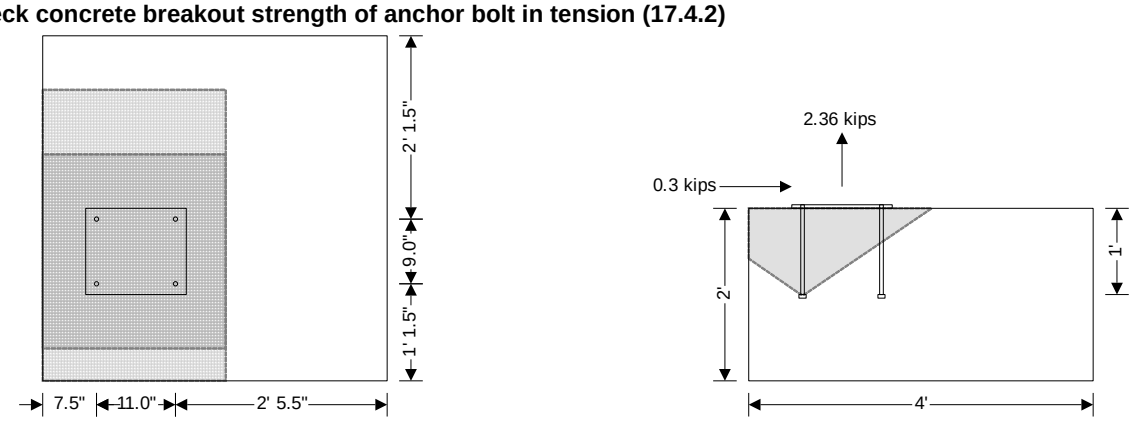

Plan on foundation

Section A-A

Concrete breakout - tension

Coeff for basic breakout strength in tension	k_c = **24**
Breakout strength for single anchor in tension	$N_b = 16 \times \lambda_a \times \sqrt{(f'_c \times 1\text{ psi})} \times h_{ef}^{5/3} \times 1\text{ in}^{1/3}$ = **55.12** kips
Projected area for groups of anchors	A_{Nc} = **1032.7** in^2
Projected area of a single anchor	$A_{Nco} = 9 \times h_{ef}^2$ = **1296** in^2
Min dist center of anchor to edge of concrete	$c_{a,min}$ = **7.5** in
Mod factor for groups loaded eccentrically	$\psi_{ec,N} = \min(1 / (1 + ((2 \times e'_N) / (3 \times h_{ef}))), 1)$ = **1.000**
Modification factor for edge effects	$\psi_{ed,N} = 0.7 + 0.3 \times (c_{a,min} / (1.5 \times h_{ef}))$ = **0.825**
Modification factor for no cracking at service loads	$\psi_{c,N}$ = **1.000**
Modification factor for cracked concrete	$\psi_{cp,N}$ = **1.000**
Nominal concrete breakout strength	$N_{cbg} = A_{Nc} / A_{Nco} \times \psi_{ed,N} \times \psi_{c,N} \times \psi_{cp,N} \times N_b$ = **36.24** kips
Concrete breakout strength	$\phi N_{cbg} = \phi_{t,c} \times N_{cbg}$ = **23.55** kips

PASS - Breakout strength exceeds tension in bolts

Pullout strength (17.4.3)

Net bearing area of the head of anchor	A_{brg} = **0.2** in^2
Mod factor for no cracking at service loads	$\psi_{c,P}$ = **1.000**
Pullout strength for single anchor	$N_p = 8 \times A_{brg} \times f'_c$ = **4.80** kips
Nominal pullout strength of single anchor	$N_{pn} = \psi_{c,P} \times N_p$ = **4.80** kips
Pullout strength of single anchor	$\phi N_{pn} = \phi_{t,cB} \times N_{pn}$ = **3.36** kips

PASS - Pullout strength of single anchor exceeds maximum axial force in single bolt

Side face blowout strength (17.4.4)

As h_{ef} <= 2.5 × min(c_{a1}, c_{a2}) the edge distance is considered to be far from an edge and blowout strength need not be considered

Steel strength of anchor in shear (17.5.1)

Built-up grout pads are not used so nominal strength will be multiplied by 1.0 (17.5.1.3)

Effective number of anchors in shear	N_{boltV} = **2**
Nom strength of anchor in shear	$V_{sa} = N_{boltV} \times 0.6 \times A_{se} \times f_{uta}$ = **9.88** kips
Steel strength of anchor in shear	$\phi V_{sa} = \phi_{v,s} \times V_{sa}$ = **6.42** kips

PASS - Steel strength of anchor exceeds shear in bolts

Concrete breakout strength in shear perpendicular to edge - Case 2. All shear resisted by rear bolts (17.5.3)

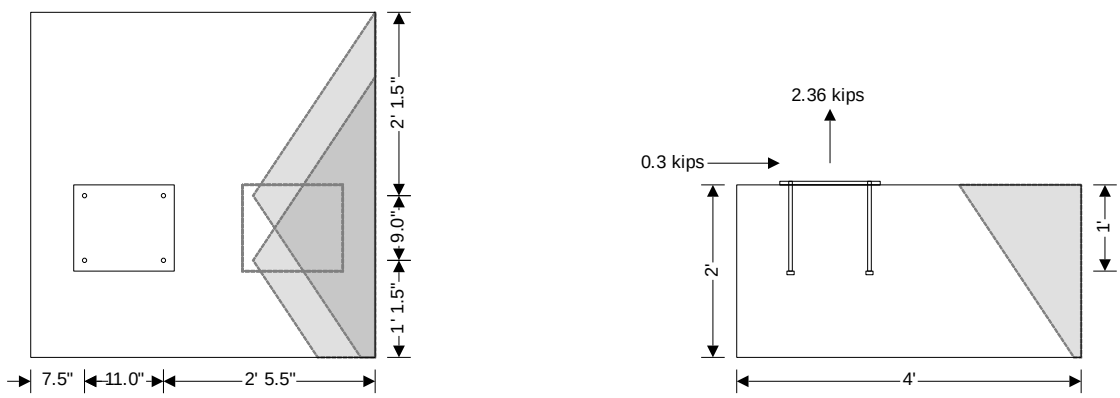

Concrete breakout - shear

The anchors are influenced by three or more edges where any edge distance is less than 1.5c_{a1} so value of c_{a1} is limited to c'_{a1} (17.5.2.4).

Bolt offset for limiting shear	$x_{V,r}$ = **23.50** in
Limiting edge distance	c'_{a1} = **17** in
Applied shear	$V_{app} = V$ = **0.30** kips
Edge distance x for shear near corner	c_{a1} = **40.5** in
Edge distance y for shear near corner	$c_{a2} = \min(y_{ce1}, y_{ce2}) - (((N_{bolty} - 1)/2) \times s_{bolty})$ = **13.5** in
Load bearing length of anchor	$l_e = \min(h_{ef}, 8 \times d_a)$ = **4** in
Basic concrete breakout strength	$V_{b1} = 7 \times (l_e / d_a)^{0.2} \times \sqrt{(d_a)} \times \lambda_a \times \sqrt{(f'_c \times 1psi)} \times (c'_{a1})^{1.5}$ = **28.80** kips
	$V_{b2} = 9 \times \lambda_a \times \sqrt{(f'_c \times 1psi \times 1\ in)} \times (c'_{a1})^{1.5}$ = **34.55** kips
Basic concrete breakout strength	$V_b = \mathrm{Min}(V_{b1}, V_{b2})$ = **28.80** kips
Projected area of a single anchor	$A_{Vco} = 4.5 \times c'^2_{a1}$ = **1300.5** in^2
Projected area of a group of anchors	A_{Vc} = **1152** in^2

Mod factor for edge effect	$\psi_{ed,V} = 0.7 + 0.3 \times c_{a2} / (1.5 \times c'_{a1})$ = **0.859**
Eccentricity of loading	e'_V = **0** in
Modification factor of eccentric loading	$\psi_{ec,V} = \min(1, 1 / (1 + ((2 \times e'_V) / (3 \times c'_{a1})))$ = **1.000**
Modification factor for cracking	$\psi_{c,V}$ = **1.000**
Modification factor for edge distance	$\psi_{h,V} = \max(\sqrt{(1.5 \times c'_{a1} / h_a)}, 1)$ = **1.031**
Nominal concrete break out strength in shear	$V_{cbg} = A_{Vc} / A_{Vco} \times \psi_{ec,V} \times \psi_{ed,V} \times \psi_{c,V} \times \psi_{h,V} \times V_b$ = **22.59** kips
Concrete break out strength in shear	$\phi V_{cbg} = \phi_{v,c} \times V_{cbg}$ = **15.81** kips

PASS - Shear breakout perpendicular to edge strength exceeds shear in bolts

Concrete breakout strength in shear perpendicular to edge - Case 3. All shear resisted by front bolts (17.5.3)

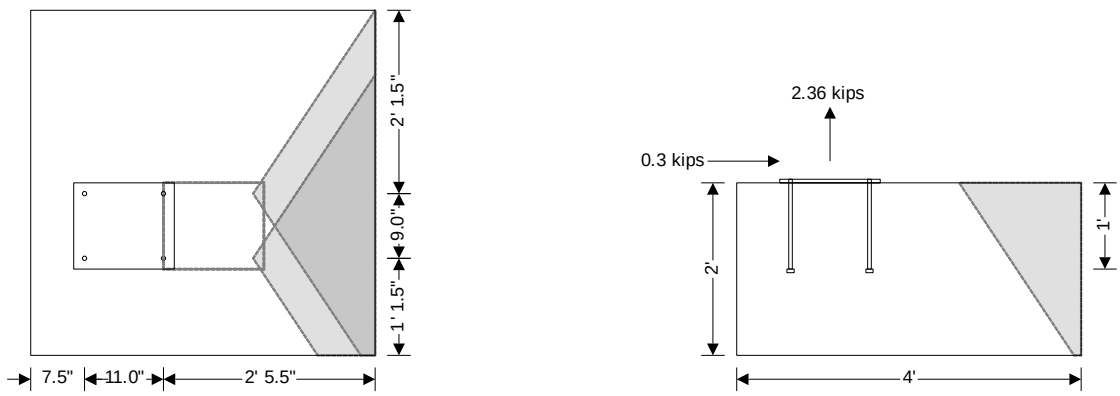

Plan on foundation

Section A-A

Concrete breakout - shear

The anchors are influenced by three or more edges where any edge distance is less than 1.5c_{a1} so value of c_{a1} is limited to c'_{a1} (17.5.2.4).

Bolt offset for limiting shear	$x_{V,f}$ = **12.50** in
Limiting edge distance	c'_{a1} = **17** in
Applied shear	$V_{app} = V$ = **0.30** kips
Edge distance x for shear near corner	c_{a1} = **29.5** in
Edge distance y for shear near corner	$c_{a2} = \min(y_{ce1}, y_{ce2}) - (((N_{bolty} - 1)/2) \times s_{bolty})$ = **13.5** in
Load bearing length of anchor	$l_e = \min(h_{ef}, 8 \times d_a)$ = **4** in
Basic concrete breakout strength	$V_{b1} = 7 \times (l_e / d_a)^{0.2} \times \sqrt{(d_a)} \times \lambda_a \times \sqrt{(f'_c \times 1psi)} \times (c'_{a1})^{1.5}$ = **28.80** kips
	$V_{b2} = 9 \times \lambda_a \times \sqrt{(f'_c \times 1psi \times 1\ in)} \times (c'_{a1})^{1.5}$ = **34.55** kips
Basic concrete breakout strength	$V_b = \mathrm{Min}(V_{b1}, V_{b2})$ = **28.80** kips
Projected area of a single anchor	$A_{Vco} = 4.5 \times c'^2_{a1}$ = **1300.5** in^2
Projected area of a group of anchors	A_{Vc} = **1152** in^2
Mod factor for edge effect	$\psi_{ed,V} = 0.7 + 0.3 \times c_{a2} / (1.5 \times c'_{a1})$ = **0.859**
Eccentricity of loading	e'_V = **0** in
Modification factor of eccentric loading	$\psi_{ec,V} = \min(1, 1 / (1 + ((2 \times e'_V) / (3 \times c'_{a1})))$ = **1.000**
Modification factor for cracking	$\psi_{c,V}$ = **1.000**
Modification factor for edge distance	$\psi_{h,V} = \max(\sqrt{(1.5 \times c'_{a1} / h_a)}, 1)$ = **1.031**
Nominal concrete break out strength in shear	$V_{cbg} = A_{Vc} / A_{Vco} \times \psi_{ec,V} \times \psi_{ed,V} \times \psi_{c,V} \times \psi_{h,V} \times V_b$ = **22.59** kips
Concrete break out strength in shear	$\phi V_{cbg} = \phi_{v,c} \times V_{cbg}$ = **15.81** kips

PASS - Shear breakout perpendicular to edge strength exceeds shear in bolts

Concrete breakout strength in shear parallel to edge - Case 2. All shear resisted by rear bolts (parallel to edge - Case 2. All shear resisted by rear bolts)

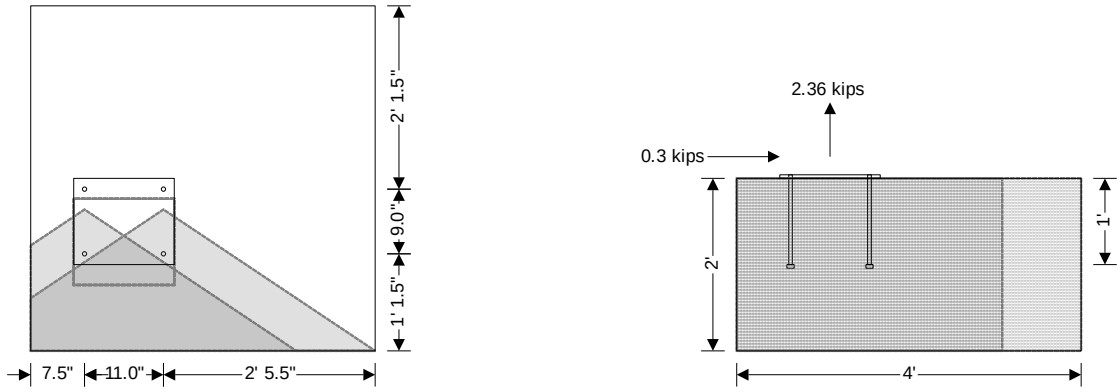

Plan on foundation

Section A-A

Concrete breakout - side shear

The anchors are influenced by three or more edges where any edge distance is less than $1.5c_{a1,p}$ so value of $c_{a1,p}$ is limited to $c'_{a1,p}$

Bolt offset for limiting shear	$y_{V,r,p}$ = **2.83** in
Limiting edge distance	$c'_{a1,p}$ = **19.67** in
Applied shear	$V_{app} = V$ = **0.30** kips
Edge distance x for shear near corner	$c_{a1,p}$ = **22.5** in
Edge distance y for shear near corner	$c_{a2,p} = \min(x_{ce1}, x_{ce2}) - (((N_{boltx} - 1)/2) \times s_{boltx})$ = **7.5** in
Load bearing length of anchor	$l_e = \min(h_{ef}, 8 \times d_a)$ = **4** in
Basic concrete breakout strength	$V_{b,p1} = 7 \times (l_e / d_a)^{0.2} \times \sqrt{(d_a)} \times \lambda_a \times \sqrt{(f'_c \times 1psi)} \times (c'_{a1,p})^{1.5}$ = **35.84** kips
	$V_{b,p2} = 9 \times \lambda_a \times \sqrt{(f'_c \times 1psi \times 1in)} \times (c'_{a1,p})^{1.5}$ = **42.99** kips
Basic concrete breakout strength	$V_{b,p} = \mathrm{Min}(V_{b,p1}, V_{b,p2})$ = **35.84** kips
Projected area of a single anchor	$A_{Vco,p} = 4.5 \times c'^2_{a1,p}$ = **1740.5** in^2
Projected area of a group of anchors	$A_{Vc,p}$ = **1152** in^2
Mod factor for edge effect	$\psi_{ed,V,p}$ = **1.000**
Eccentricity of loading	$e'_{V,p}$ = **0** in
Modification factor of eccentric loading	$\psi_{ec,V,p} = \min(1, 1 / (1 + ((2 \times e'_{V,p}) / (3 \times c'_{a1,p}))))$ = **1.000**
Modification factor for cracking	$\psi_{c,V}$ = **1.000**
Modification factor for edge distance	$\psi_{h,V,p} = \max(\sqrt{(1.5 \times c'_{a1,p} / h_a)}, 1)$ = **1.109**
Nominal concrete break out strength in shear	$V_{cbg,p} = 2 \times A_{Vc,p} / A_{Vco,p} \times \psi_{ec,V,p} \times \psi_{ed,V,p} \times \psi_{c,V} \times \psi_{h,V,p} \times V_{b,p}$ = **52.60** kips
Concrete break out strength in shear	$\phi V_{cbg,p} = \phi_{v,c} \times V_{cbg,p}$ = **36.82** kips

PASS - Shear breakout strength parallel to edge exceeds shear in bolts

Concrete breakout strength in shear parallel to edge - Case 3. All shear resisted by front bolts (parallel to edge - Case 3. All shear resisted by front bolts)

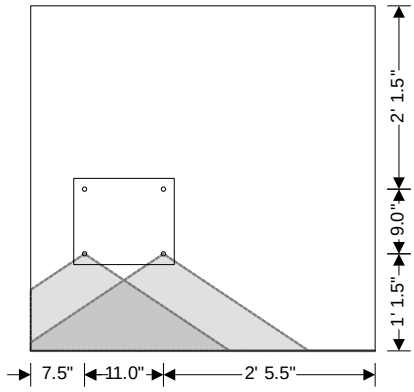

Plan on foundation

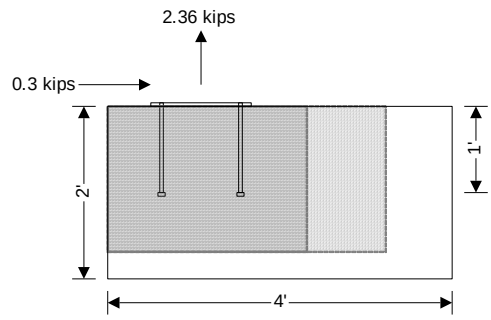

Section A-A

Concrete breakout - side shear

Applied shear	$V_{app} = V =$ **0.30** kips
Edge distance x for shear near corner	$c_{a1,p} =$ **13.5** in
Edge distance y for shear near corner	$c_{a2,p} = \min(x_{ce1}, x_{ce2}) - (((N_{boltx} - 1)/2) \times s_{boltx}) =$ **7.5** in
Load bearing length of anchor	$l_e = \min(h_{ef}, 8 \times d_a) =$ **4** in
Basic concrete breakout strength	$V_{b,p1} = 7 \times (l_e / d_a)^{0.2} \times \sqrt{(d_a)} \times \lambda_a \times \sqrt{(f'_c \times 1psi)} \times (c_{a1,p})^{1.5} =$ **20.38** kips
	$V_{b,p2} = 9 \times \lambda_a \times \sqrt{(f'_c \times 1psi \times 1in)} \times (c_{a1,p})^{1.5} =$ **24.45** kips
Basic concrete breakout strength	$V_{b,p} = \mathrm{Min}(V_{b,p1}, V_{b,p2}) =$ **20.38** kips
Projected area of a single anchor	$A_{Vco,p} = 4.5 \times c_{a1,p}^2 =$ **820.1** in^2
Projected area of a group of anchors	$A_{Vc,p} =$ **784.7** in^2
Mod factor for edge effect	$\psi_{ed,V,p} =$ **1.000**
Eccentricity of loading	$e'_{V,p} =$ **0** in
Modification factor of eccentric loading	$\psi_{ec,V,p} = \min(1, 1 / (1 + ((2 \times e'_{V,p}) / (3 \times c_{a1,p})))) =$ **1.000**
Modification factor for cracking	$\psi_{c,V} =$ **1.000**
Modification factor for edge distance	$\psi_{h,V,p} = 1.0 =$ **1.000**
Nominal concrete break out strength in shear	$V_{cbg,p} = 2 \times A_{Vc,p} / A_{Vco,p} \times \psi_{ec,V,p} \times \psi_{ed,V,p} \times \psi_{c,V} \times \psi_{h,V,p} \times V_{b,p} =$ **39.00** kips
Concrete break out strength in shear	$\phi V_{cbg,p} = \phi_{v,c} \times V_{cbg,p} =$ **27.30** kips
	PASS - Shear breakout strength parallel to edge exceeds shear in bolts

Pryout strength of anchor in shear (17.5.3)

Coefficient of pryout strength	$k_{cp} =$ **2.0**
Nominal pryout strength of anchor in shear	$V_{cpg} = k_{cp} \times N_{cbg} =$ **72.48** kips
Pryout strength of anchor in shear	$\phi V_{cpg} = \phi_{v,cB} \times V_{cpg} =$ **50.73** kips
	PASS - Pryout strength of anchor exceeds shear in bolts

Interaction of tensile and shear forces

Critical design strength in tension	$\phi N_n = \phi N_{pn} =$ **3.36** kips
Critical applied tensile force	$N_{ua} = N_{max,s} =$ **1.18** kips
	$N_{ua} / \phi N_n =$ **0.352**
Critical design strength in shear	$\phi V_n = \phi V_{sa} =$ **6.42** kips
Critical applied shear force	$V_{ua} = \mathrm{abs}(V) =$ **0.30** kips

$V_{ua} / \phi V_n$ = **0.047**

As $V_{ua} / \phi V_n$ <= 0.2,Full strength in tension is permitted

Pass - Applied tension is less than tension capacity

A. GENERAL

1. STRUCTURE IS DESIGNED TO ACT AS A STRUCTURAL UNIT UPON COMPLETION. CONTRACTOR SHALL DESIGN AND PROVIDE NECESSARY BRACING, TEMPORARY SUPPORTS, AND SHORING TO RESIST FORCES ON THE STRUCTURES DURING CONSTRUCTION AND ERECTION.
2. CONTRACTOR SHALL SUBMIT SHOP DRAWINGS FOR THE STRUCTURE TO THE ENGINEER FOR REVIEW AND APPROVAL. SHOP DRAWINGS SHALL CLEARLY SHOW THE COORDINATION AND INTERFACE BETWEEN THE INDIVIDUAL COMPONENTS.
3. SHOP DRAWINGS SHALL INDICATE INSTALLATION PROCEDURES TO INSTALL AND PROTECT THE STRUCTURE AS REQUIRED DURING SITE WORK CONSTRUCTION ACTIVITIES BY OTHERS.

B. DESIGN CRITERIA

1. BUILDING CODE

A. DESIGN . . . . . 2018 INTERNATIONAL BUILDING CODE WITH CITY OF PRESCOTT AMENDMENTS
B. CONSTRUCTION . . . . . MARICOPA ASSOCIATION OF GOVERNMENTS (MAG) UNIFORM STANDARD SPECIFICATIONS FOR PUBLIC WORKS CONSTRUCTION AND CITY OF PRESCOTT SUPPLEMENT.

2. SOIL INFORMATION (BASED ON VALUES PROVIDED IN 2018 IBC).

a. DEAD LOAD – WEIGHT OF BACKFILL = 120pcf
b. ALLOWABLE BEARING PRESSURE = 1,500psf

3. DESIGN LOADS

A. LIVE LOAD. . . . . N/A

B. WIND LOAD
a. BASIC WIND SPEED . . . . . 115 MPH
b. IMPORTANCE FACTOR 1.00
c. EXPOSURE CATEGORY . . . . . B

C. SEISMIC LOAD
a. OCCUPANCY CATEGORY II
b. SPECTRAL RESPONSE (S_{DS}) 0.314g
c. SPECTRAL RESPONSE (S_{D1}) 0.141g
d. SEISMIC DESIGN CATEGORY C
e. SITE CLASS . . . . . D
f. IMPORTANCE FACTOR 1.0
g. SEISMIC FORCE RESISTING SYSTEM:
CANTILEVERED COLUMN SYSTEMS DETAILED
TO CONFORM TO THE REQUIREMENTS FOR: "STEEL ORDINARY MOMENT FRAMES"
h. RESPONSE MODIFICATION FACTOR 3.50
i. DEFLECTION AMPLIFICATION FACTOR . . . 1.25
j. ANALYSIS PROCEDURE: EQUIVALENT LATERAL FORCE PROCEDURE

D. DESIGN DEAD LOADS
a. SELF WEIGHT OF MATERIAL

C. CONCRETE

ALL CONCRETE FOR STRUCTURES SHALL HAVE A MINIMUM COMPRESSIVE STRENGTH OF 4000 POUNDS PER SQUARE INCH AT 28 DAYS.

1. REINFORCING BARS SHALL BE NEW BILLET STEEL CONFORMING TO ASTM DESIGNATION A615, GRADE 60, DEFORMED. REINFORCING BARS SHOWN ON THE PLANS TO BE WELDED SHALL BE NEW BILLET STEEL CONFORMING TO ASTM DESIGNATION A706, GRADE 60, DEFORMED.
2. CONCRETE DESIGN IS IN CONFORMANCE WITH "BUILDING CODE REQUIREMENTS FOR REINFORCED CONCRETE" (ACI 318–14) AND 2018 IBC.
3. CONCRETE MIX TO HAVE 4%–7% AIR ENTRAINMENT.
4. DETAIL, FABRICATE AND ERECT REINFORCEMENT BARS, INCLUDING BAR SUPPORTS, SPACERS, ETC. IN ACCORDANCE WITH "DETAILS AND DETAILING OF CONCRETE REINFORCEMENT (ACI SP–66(04)).
5. CONCRETE COVER FOR REINFORCEMENT BARS SHALL CONFORM TO THE FOLLOWING, UNLESS INDICATED OTHERWISE ON THE DRAWINGS.
A. CONCRETE CAST AGAINST EARTH . . 3 INCHES
B. CONCRETE EXPOSED TO EARTH OR WEATHER . . . . . 2 INCHES
NOTE: CLEARANCES MAY BE REDUCED ½ INCH FOR STIRRUPS AND TIES.

D. STRUCTURAL STEEL

1. STRUCTURAL STEEL WIDE FLANGE COLUMNS SHALL CONFORM TO ASTM A588 GRADE 50W (WEATHERING STEEL) UNLESS NOTED OTHERWISE.
2. STRUCTURAL STEEL HSS MEMBERS SHALL CONFORM TO ASTM A847 GRADE 50W (WEATHERING STEEL) UNLESS NOTED OTHERWISE.
3. ALL OTHER STRUCTURAL STEEL SHALL CONFORM TO ASTM A588 GRADE 50W (WEATHERING STEEL) GRADE 50 UNLESS NOTED OTHERWISE.
4. PLATES, BARS, CHANNELS AND ANGLES SHALL CONFORM TO ASTM A588 GRADE 50W (WEATHERING STEEL) UNLESS NOTED OTHERWISE.
5. DESIGN, FABRICATION AND ERECTION OF STRUCTURAL STEEL SHALL CONFORM TO THE LATEST AISC CODES AND SPECIFICATIONS. INCLUDING THE AISC CODE OF STANDARD PRACTICE FOR STEEL BUILDINGS.
6. EXPOSED OR PARTIALLY EXPOSED STRUCTURAL STEEL SHALL BE FABRICATED AND INSTALLED PER THE "ARCHITECTURALLY EXPOSED STRUCTURAL STEEL" SECTION OF THE AISC MANUAL AND THE AISC CODE OF STANDARD PRACTICE FOR STEEL BUILDINGS. STEEL NOT CONFORMING TO THESE TOLERANCES WILL BE REJECTED AND REFRABRICATED AT NO EXPENSE TO THE OWNER.
7. SHOP CONNECTIONS SHALL BE MADE WITH HIGH–STRENGTH BOLTS OR BY WELDING AS SHOWN ON THE PLANS. FIELD CONNECTIONS SHALL BE MADE WITH HIGH–STRENGTH BOLTS, EXCEPT WHERE WELDING IS INDICATED ON THE DRAWINGS. HIGH–STRENGTH BOLTS SHALL CONFORM TO ASTM DESIGNATION A325. BOLTED CONNECTIONS SHALL BE CONSIDERED AS SNUG–TIGHTENED JOINTS WITH THREADS INCLUDED IN SHEAR PLANE UNLESS NOTED OTHERWISE. ALL BOLTS SHALL BE ⅝ INCH DIAMETER UNLESS NOTED OTHERWISE.
8. HIGH–STRENGTH BOLTS SPECIFIED ON THE PLANS AS STAINLESS STEEL SHALL CONFORM TO ASTM F593. ANCHOR BOLTS AND ALL–THREADED ROD STEEL SHALL CONFORM TO ASTM A193 GRADE B8M.
9. ALL WELD SIZES, NOT INDICATED SHALL COMPLY WITH THE LATEST AWS D1.1 BUT IN NO CASE SHALL WELD SIZE BE LESS THAN 3⁄16 INCH. WELDING OF STAINLESS STEEL MEMBERS SHALL COMPLY WITH THE LATEST AWS D1.6.
10. NATURAL MILL CAMBER OF BEAMS SHALL BE PLACED UP.
11. THE STRUCTURAL BEAMS ARE NOT DESIGNED FOR USE AS LIFT BEAMS.
12. ADEQUATE TEMPORARY BRACING SHALL BE PROVIDED DURING CONSTRUCTION AND ERECTION OF PERGOLA.
13. MINIMUM THICKNESS OF STRUCTURAL STEEL SHALL BE ¼ INCH UNLESS NOTED OTHERWISE.

DIMENSIONS

DIMENSIONS SHALL NOT BE SCALED FROM DRAWINGS.

SPECIAL INSPECTIONS:

SPECIAL INSPECTION IS REQUIRED DURING THE FOLLOWING OPERATIONS PER I.B.C. SECTION 1704:

STRUCTURAL CONCRETE AS REQUIRED BY THE PROJECT SPECIFICATION AND SPECIAL INSPECTION TABLES.
SOILS AS REQUIRED BY THE PROJECT SPECIFICATION AND SPECIAL INSPECTION TABLES.
STRUCTURAL STEEL AS REQUIRED BY IBC SECTION 1705.2.1.

DUTIES AND RESPONSIBILITIES OF THE SPECIAL INSPECTOR:

1. THE SPECIAL INSPECTOR SHALL OBSERVE THE WORKED ASSIGNED TO BE CERTAIN IT CONFORMS WITH THE APPROVED DESIGN DRAWINGS AND SPECIFICATIONS.
2. THE SPECIAL INSPECTOR SHALL FURNISH INSPECTION REPORTS TO THE ENGINEER OF RECORD, AND OWNER. ALL DISCREPANCIES SHALL BE BROUGHT TO THE IMMEDIATE ATTENTION OF THE CONTRACTOR FOR CORRECTION, THEN, IF UNCORRECTED, TO THE DESIGN AUTHORITY.
3. UPON COMPLETION OF THE ASSIGNED WORK, THE ENGINEER SHALL COMPLETE AND SIGN A FINAL REPORT CERTIFYING THAT TO THE BEST OF HIS KNOWLEDGE, THE WORK IS IN CONFORMANCE WITH THE APPROVED PLANS AND SPECIFICATIONS, AND THE APPLICABLE WORKMANSHIP PROVISIONS OF THE CODE.
4. INSPECTIONS SHALL BE PERFORMED BY AN ICC CERTIFIED INSPECTOR APPROVED BY CLARK COUNTY EMPLOYED BY THE OWNER/DEVELOPER.

DUTIES AND RESPONSIBILITIES OF THE CONTRACTOR:

1. FOR INSPECTION OF CONCRETE, BOLTS IN CONCRETE, REINFORCING STEEL, EXPANSION BOLTS, AND ADHESIVE ANCHORS NOTIFY THE SPECIAL INSPECTOR THAT WORK IS READY FOR INSPECTION AT LEAST ONE WORKING DAY (24 HOURS MINIMUM) BEFORE SUCH INSPECTION IS REQUIRED.
2. ALL WORK REQUIRING SPECIAL STRUCTURAL INSPECTION SHALL REMAIN ACCESSIBLE AND EXPOSED UNTIL IT IS OBSERVED BY THE SPECIAL STRUCTURAL INSPECTOR.

REQUIRED SPECIAL INSPECTIONS AND TESTS OF CONCRETE CONSTRUCTION

TYPE	CONTINUOUS SPECIAL INSPECTION	PERIODIC SPECIAL INSPECTION	REFERENCED STANDARD	IBC REFERENCE
INSPECT REINFORCEMENT AND VERIFY PLACEMENT.	–	X	ACI 318: CH. 20, 25.2, 25.3, 26.6.1–26.6.3	1908.4
REINFORCING BAR WELDING: A. VERIFY WELDABILITY OF REINFORCING BARS OTHER THAN ASTM A706 B. INSPECT SINGLE–PASS FILLET WELDS, MXIMUM 5⁄16" C. INSPECT ALL OTHER WELDS	– – X	X X	AWS D1.4 ACI 318: 26.6.4	–
INSPECT ANCHORS CAST IN CONCRETE.	–	X	ACI 318: 17.8.2	–
INSPECT ANCHORS POST–INSTALLED IN HARDENED CONCRETE MEMBERS. A. ADHESIVE ANCHORS INSTALLED IN HORIZONTALLY OR UPWARDLY INCLINED ORIENTATIONS TO RESIST SUSTAINED TENSION LOADS. B. MECHANICAL ANCHORS AND ADHESIVE ANCHORS NOT DEFINED IN 4.A.	X –	– X	ACI 318:17.8.2.4 ACI 318: 17.8.2	–
VERIFY USE OF REQUIRED DESIGN MIX.	–	X	ACI 318: CH. 19, 26.4.3, 26.4.4	1904.1, 1904.2, 1908.2, 1908.3
PRIOR TO CONCRETE PLACEMENT, FABRICATE SPECIMENS FOR STRENGTH TESTS, PERFORM SLUMP AND AIR CONTENT TESTS, AND DETERMINED THE TEMPERATURE OF THE CONCRETE.	X	–	ASTM C172, ASTM C31, ACI 318: 26.5, 26.12	1908.10
INSPECT CONCRETE AND SHOTCRETE PLACEMENT FOR PROPER APPLICATION TECHNIQUES.	X	–	ACI 318: 26.5	1908.6, 1908.7, 1908.8
VERIFY MAINTENANCE OF SPECIFIED CURING TEMPERATURE AND TECHNIQUES.	–	X	ACI 318: 26.5.3–26.5.5	1908.9
VERIFY IN–SITU CONCRETE STRENGTH, PRIOR TO STRESSING OF TENDONS IN POST–TENSIONED CONCRETE AND PRIOR TO REMOVAL OF SHORES AND FORMS FROM BEAMS AND STRUCTURAL SLABS.	–	X	ACI 318: 26.11.2	–
INSPECT FORMWORK FOR SHAPE, LOCATION AND DIMENSIONS OF THE CONCRETE MEMBER BEING FORMED.	–	X	ACI 318: 26.11.1.2(b)	–

NOTES:

FREQUENCY REFERS TO THE FREQUENCY OF INSPECTION, WHICH MAY BE CONTINUOUS DURING THE TASK LISTED OR PERIODICALLY DURING THE LISTED TASK, AS DEFINED IN THE TABLE.

Call at least two full working days before you begin excavation.
ARIZONA 811
Arizona Blue Stake, Inc.
Dial 8-1-1 or 1-800-STAKE-IT (782-5348)
In Maricopa County: (602) 263-1100

CITY OF PRESCOTT PUBLIC WORKS

WHISKEY ROW SIGN GENERAL NOTES

DWG. NO.
DATE 11/11/2019
SHEET NO. **S1.01**
1 OF 4

CITY OF PRESCOTT Everybody's Hometown

PREPARED BY MR | CHECKED BY CHG | FOR: COP

Registered Professional Engineer (Civil) CERTIFICATE NO. 36184 DAVID J. LEISTIKO Date Signed 11/11/19 ARIZONA, U.S.A.

Kimley»Horn
© 2018 KIMLEY–HORN & ASSOCIATES, INC.
201 N. MONTEZUMA, SUITE 206
PRESCOTT, ARIZONA, 86301
PHONE: 928-458-7121
WWW.KIMLEY-HORN.COM

NO.	BY	DATE	REVISIONS	APPRV	DATE
				CITY	

ENGINEER

FILE NAME&PATH: K:\PHX_STRUCTURE\000000000-WHISKEY ROW SIGN\CADD\DESIGN FILES\GENERAL NOTES.DWG

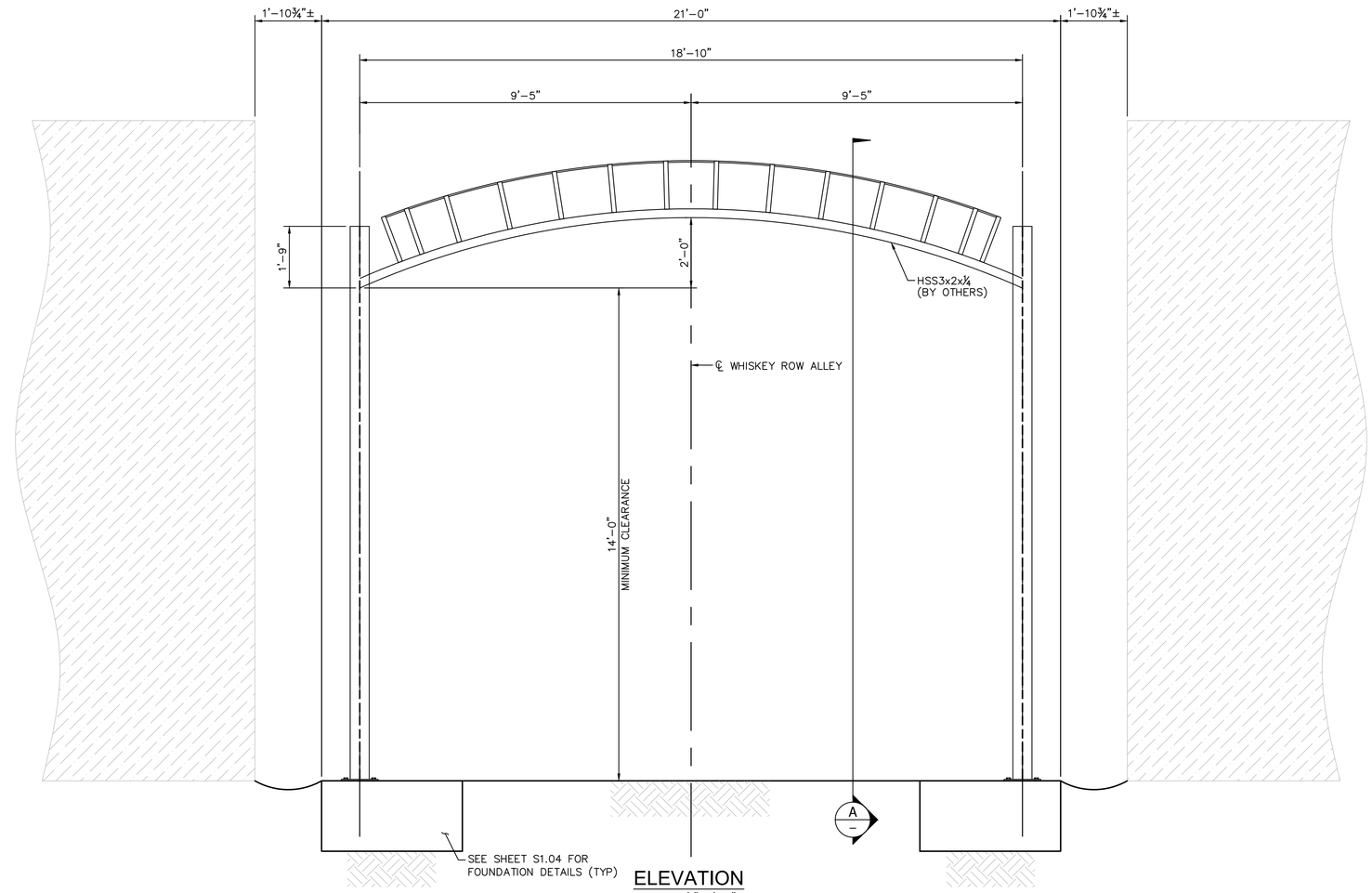

ELEVATION

SCALE: ½"=1'-0"

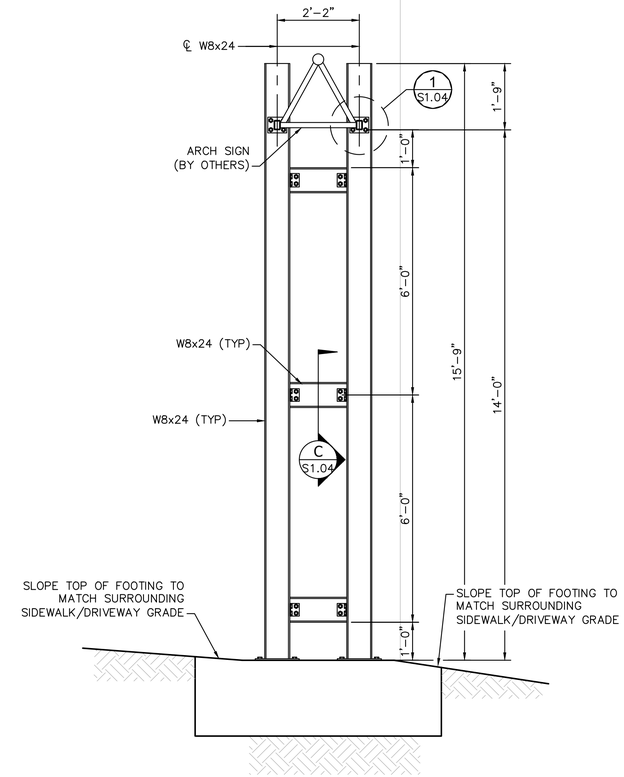

A
–
SECTION

SCALE: ½"=1'-0"

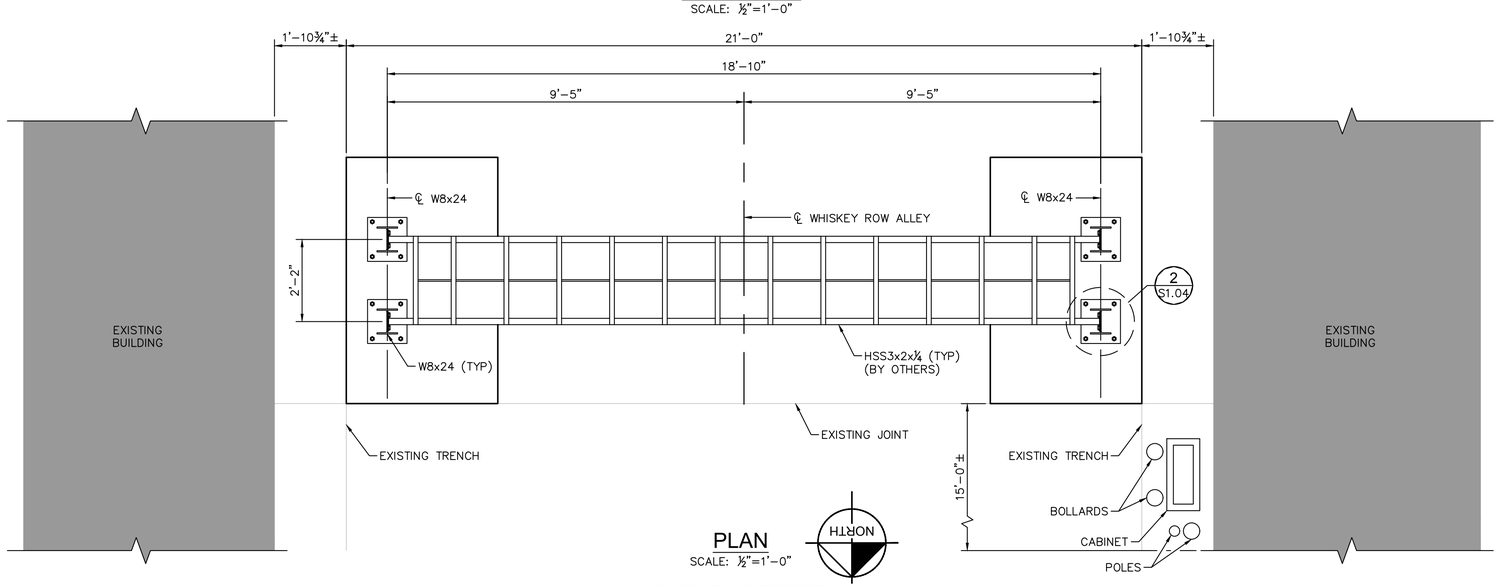

PLAN

SCALE: ½"=1'-0"

GURLEY STREET

Call at least two full working days before you begin excavation.
ARIZONA 811
Arizona Blue Stake, Inc.
Dial 8-1-1 or 1-800-STAKE-IT (782-5348)
In Maricopa County: (602) 263-1100

CITY OF PRESCOTT PUBLIC WORKS

WHISKEY ROW SIGN
PLAN & ELEVATION (NORTH SIGN)

DWG. NO. S1.02
DATE 11/11/2019
SHEET NO. 2 OF 4

CITY OF PRESCOTT
Everybody's Hometown

PREPARED BY MR | CHECKED BY CHG | FOR: COP

Registered Professional Engineer (Civil)
CERTIFICATE NO. 36197
DAVID J. LEISTIKO
Date Signed 11/11/19
ARIZONA, U.S.A.

Kimley»Horn
© 2018 KIMLEY-HORN & ASSOCIATES, INC.
201 N. MONTEZUMA, SUITE 206
PRESCOTT, ARIZONA 86301
PHONE: 928-458-7121
WWW.KIMLEY-HORN.COM

NO.	BY	DATE	REVISIONS	APPRV	DATE
				CITY	

ENGINEER

FILE NAME&PATH: K:\PHX_STRUCTURE\000000000-WHISKEY ROW SIGN\CADD\DESIGN FILES\X09134501 4_ST.DWG

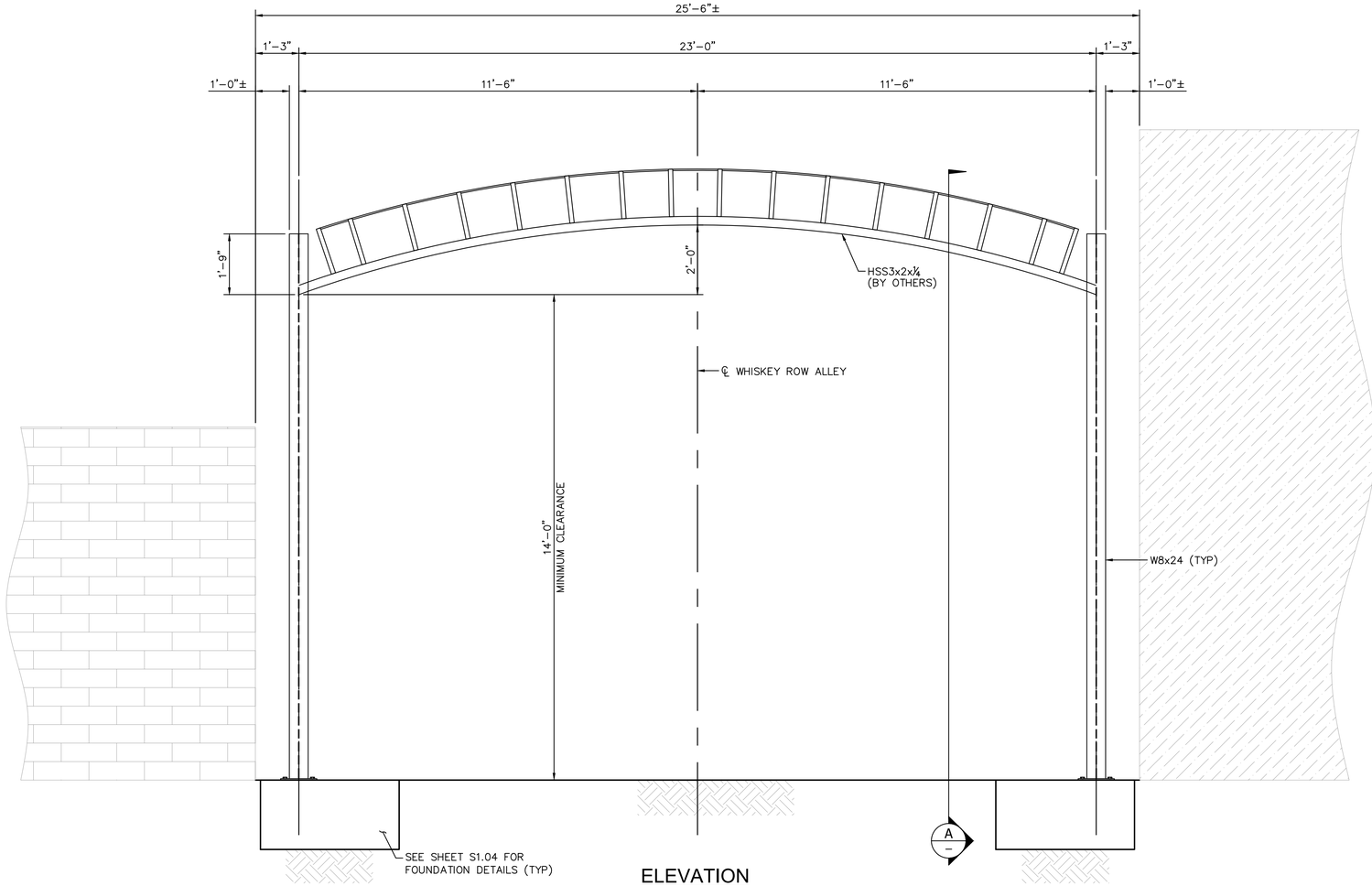

ELEVATION
SCALE: ½"=1'-0"

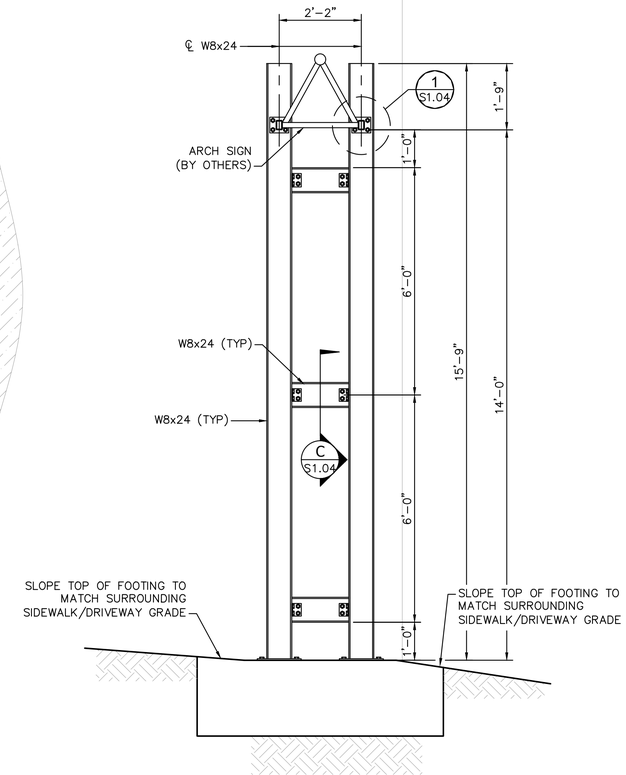

A
–
SECTION
SCALE: ½"=1'-0"

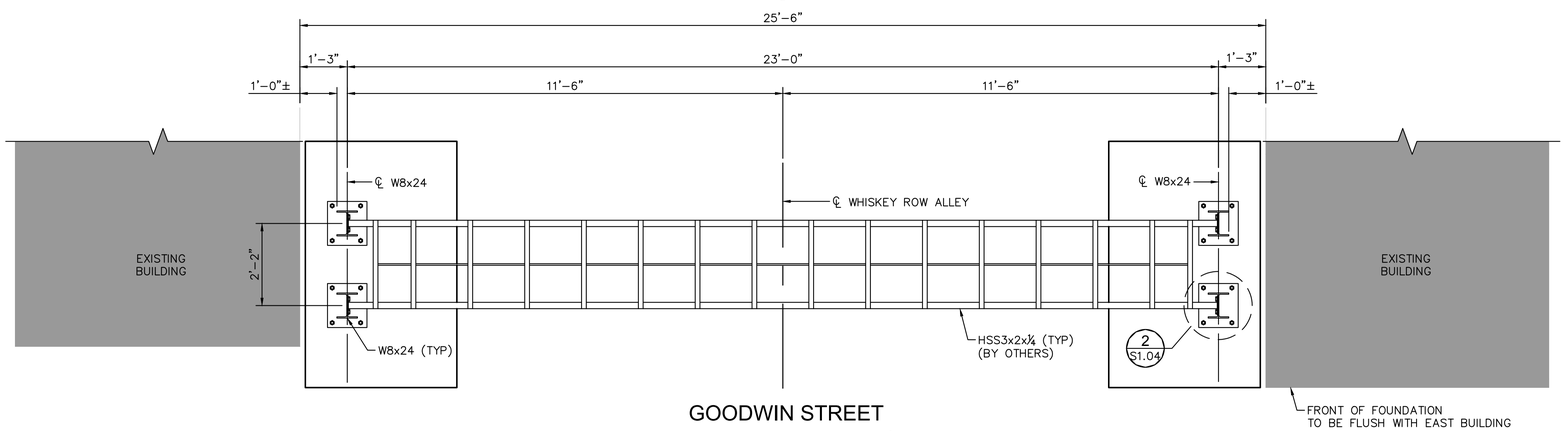

PLAN
SCALE: ½"=1'-0"

Call at least two full working days before you begin excavation.
ARIZONA 811
Arizona Blue Stake, Inc.
Dial 8-1-1 or 1-800-STAKE-IT (782-5348)
In Maricopa County: (602) 263-1100

DWG. NO.
DATE 11/11/2019
SHEET NO. S1.03
3 OF 4

CITY OF PRESCOTT PUBLIC WORKS

WHISKEY ROW SIGN
PLAN & ELEVATION (SOUTH SIGN)

CITY OF PRESCOTT
Everybody's Hometown

PREPARED BY MR | CHECKED BY CHG | FOR: COP

Registered Professional Engineer (Civil)
CERTIFICATE NO. 36197
DAVID J. LEISTIKO
Date Signed 11/11/19
ARIZONA, U.S.A.

Kimley»Horn
© 2018 KIMLEY-HORN & ASSOCIATES, INC.
201 N. VIRGINIA, SUITE 206
PRESCOTT, ARIZONA 86301
PHONE: 928-458-7121
WWW.KIMLEY-HORN.COM

NO.	BY	DATE	REVISIONS	APPRV	DATE
				CITY	

ENGINEER

FILE NAME&PATH: K:\PHX_STRUCTURE\000000000-WHISKEY ROW SIGN\CADD\DESIGN FILES\X09134501 4_ST.DWG

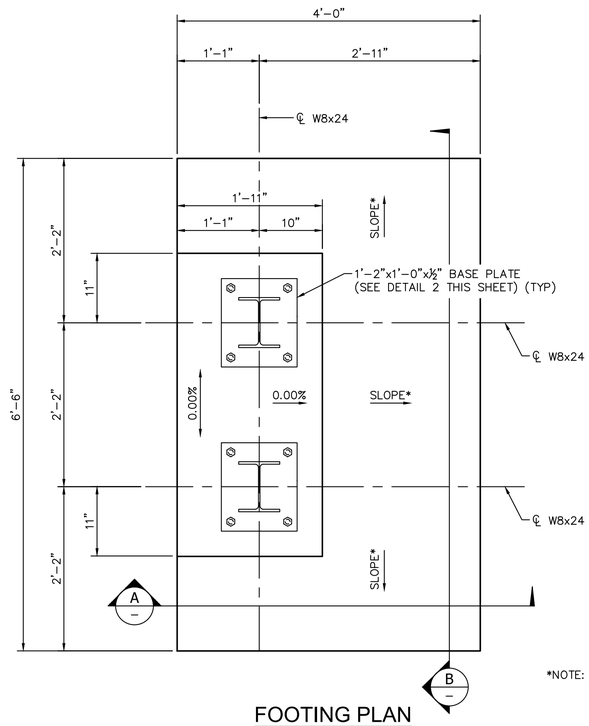

*NOTE: SLOPE TOP OF FOOTING TO MATCH SURROUNDING SIDEWALK/DRIVEWAY GRADE

FOOTING PLAN
SCALE: 1"=1'-0"

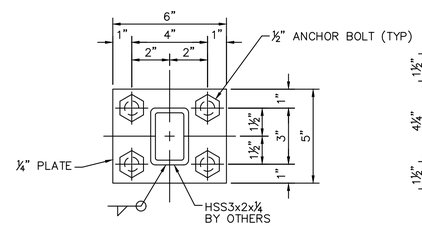

1 S1.02 / 1 S1.03 DETAIL
SCALE: 3"=1'-0"

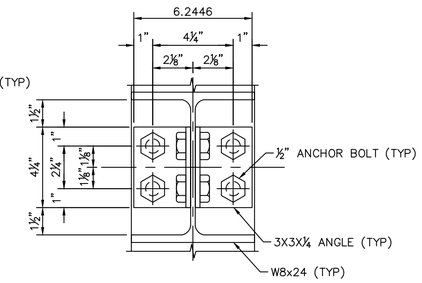

C S1.02 / C S1.03 SECTION
SCALE: 3"=1'-0"

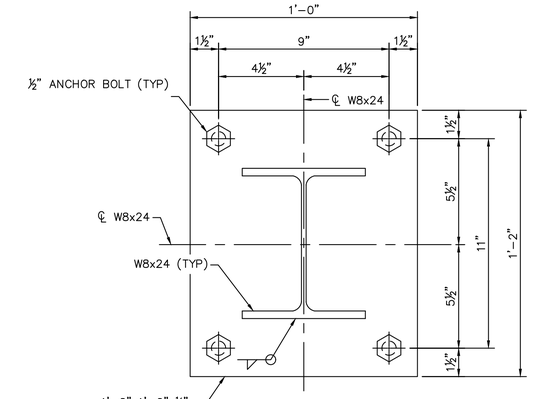

2 S1.02 / 2 S1.03 DETAIL
SCALE: 3"=1'-0"

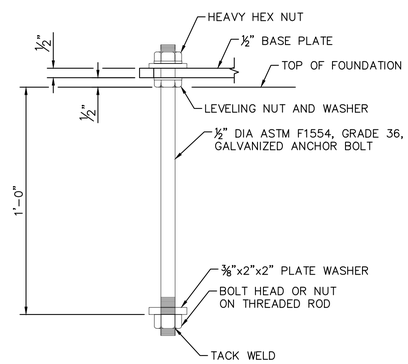

3 ANCHOR BOLT DETAIL
SCALE: 3" = 1'-0"

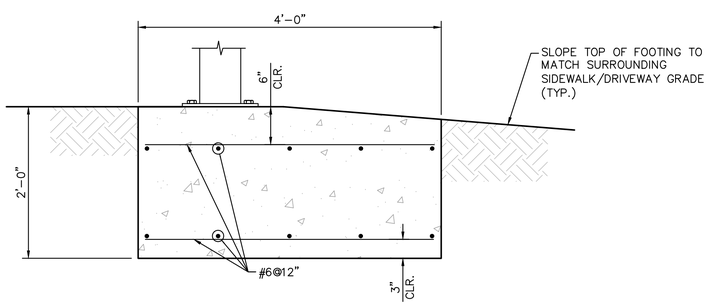

A FOOTING TYPICAL SECTION
SCALE: 1"=1'-0"

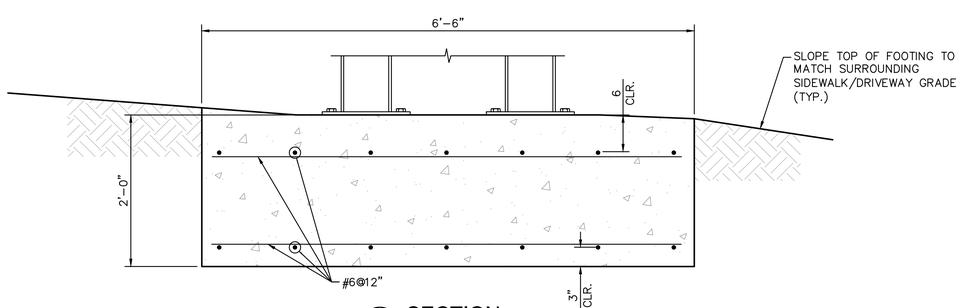

B SECTION
SCALE: 1"=1'-0"

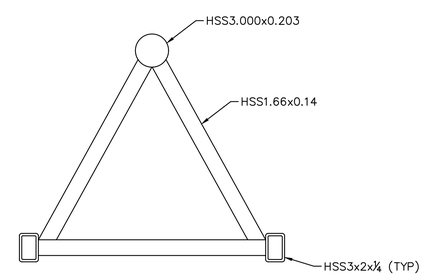

4 CONCEPTUAL ARCH DETAIL
SCALE: 1½" = 1'-0"

Call at least two full working days before you begin excavation.
ARIZONA 811
Arizona Blue Stake, Inc.
Dial 8-1-1 or 1-800-STAKE-IT (782-5348)
In Maricopa County: (602) 263-1100

CITY OF PRESCOTT PUBLIC WORKS

WHISKEY ROW SIGN
FOUNDATION & CONNECTION
DETAILS

DWG. NO.
DATE 11/11/2019
SHEET NO. **S1.04**
4 OF 4

CITY OF PRESCOTT
Everybody's Hometown

PREPARED BY MR | CHECKED BY CHG | FOR: COP

Registered Professional Engineer (Civil)
Certificate No. 36-[illegible]
DAVID J. LEISTIKO
Date Signed 11/11/19
ARIZONA, U.S.A.

Kimley»Horn
© 2018 KIMLEY-HORN & ASSOCIATES, INC.
201 N. MONTEZUMA, SUITE 206
PRESCOTT, ARIZONA 86301
PHONE: 928-458-7121
WWW.KIMLEY-HORN.COM

NO.	BY	DATE	REVISIONS	APPRV	DATE
				CITY	
				ENGINEER	

FILE NAME&PATH: K:\PHX_STRUCTURE\000000000-WHISKEY ROW SIGN\CADD\DESIGN FILES\X09134501 4_ST.DWG

WHISKEY ROW ALLEY
A NAPOLETANA