CITY OF PRESCOTT

PEAVINE TRAIL CROSSING DESIGN ALTERNATIVES FOR GRANITE DELLS ESTATES PROPOSED ROAD 39

PREPARED FOR:
City of Prescott
P.O. Box 2059
Prescott, AZ 86302
(928) 777-1130

SCOTT A. LYON, P.E.
Registered Professional Engineer (Civil)
CERTIFICATE NO. 35898
SCOTT A. LYON
Date Signed 12/8/09
ARIZONA, U.S.A.
EXPIRES 3-31-10

DESIGN: Scott A. Lyon, P.E., R.L.S.
DATE: December 8, 2009

LYON ENGINEERING
Civil Engineers • Land Surveyors

3623 Crossings Drive ● Prescott, AZ 86305 ● 928-776-1750 ● Fax: 928-776-0605

TABLE OF CONTENTS **PAGE**

1. Introduction 4
2. Background 4
3. Existing Condition 4
    Longitudinal Slope 5
    Cross Slope 5
    Clear Width 6
    Vertical Clearance 6
    Trail Embankment 7
    Surface Type 7
    User Type 7
    Number of Users 7
    Conclusion 8
4. Design Criteria 9
    Longitudinal Slope 9
    Cross Slope 9
    Clear Width 10
    Vertical Clearance 10
    Horizontal Clearance/Span 10
    Change in Level/Tread Obstacles 10
    Handrail Height 10
    Handrail Diameter 11
    Design Speed 11
    Sight Distance 11
    Traffic Volumes 11
5. Evaluation of Crossings 11
  5.1 At-Grade 12
    Key Components 12
    Geotechnical and Structural Components 13
    Drainage 13
    Impacts 13
    Advantages/Disadvantages 13
  5.2 Grade Separated-Peavine Overpass 14
    Key Components 15
    Geotechnical and Structural Components 15
    Drainage 15
    Impacts 16
    Phasing 16
    Advantages/Disadvantages 16
  5.3 Grade Separated-Peavine Underpass-Road 39 at an Elevated Grade 16
    Key Components 18
    Geotechnical and Structural Components 18
    Drainage 18
    Impacts 18
    Phasing 19
    Advantages/Disadvantages 19

5.4 Grade Separated-Alternate Location-Peavine Underpass-Road 39 at an Elevated Grade 19
Key Components 21
Geotechnical and Structural Components 22
Drainage 22
Impacts 22
Phasing 22
Advantages/Disadvantages 23
5.5 Grade Separated-Peavine Underpass-Road 39 at Designed Grade 23
Key Components 24
Geotechnical and Structural Components 25
Drainage 25
Impacts 25
Phasing 26
Advantages/Disadvantages 26
6.0 Conclusions and Recommendations 26
Maintenance 26
Cost Estimates 26
Alternate Matrix 27
Preferred Crossing Solution 29
7.0 References 31

APPENDICIES

Appendix A – Trail User Data
Appendix B – Sight Distance Calculations
Appendix C – Conceptual Site Drawings
Appendix D – Weighted Decision Matrix
Appendix E – Structure Schematics
Appendix F – Cost Estimates
Appendix G – Manual on Uniform Traffic Control Devices Exhibit
Appendix H – Road 39 Traffic Volumes
Appendix I – Geotechnical Analysis
Appendix J – Highway Capacity Manual – Level of Service Calculation
Appendix K – Federal Highway Administration Chart
Appendix L – Location Map for Photographs
Appendix M – Public Response and Summary

1. Introduction

The City of Prescott has retained the services of Lyon Engineering to evaluate a proposed crossing of the Peavine Trail. The location of the specific crossing will be at the intersection of the Peavine Trail and "Road 39" at the western boundary of the proposed Granite Dells Estates subdivision. The exhibit at right shows the area of the evaluation. The types of crossings to be evaluated include at-grade, above grade (overpass) and below grade (underpass).

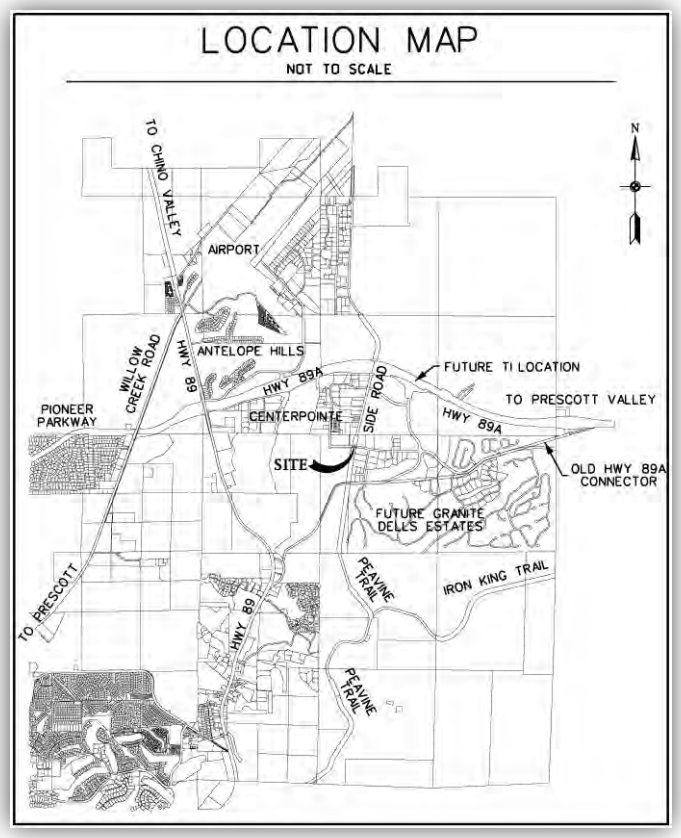

This report will discuss five topics; existing conditions, location of potential crossings, design criteria for new crossings, evaluation of crossings and recommendations.

2. Background

The Peavine Trail is a rails-to-trails facility that follows the alignment of the Santa Fe Railway originally built in 1893. The Peavine has been listed as a National Recreation Trail and provides views of Granite Dells and Watson Lake. The trail provides access for pedestrian, equestrian and bicycle users, and runs from the Sundog trailhead near Prescott Lakes Parkway and Sundog Ranch Road to a proposed trailhead near State Route 89A and Side Road. The trail also provides connectivity to the Iron King Trail that continues to Prescott Valley. Amenities along the trail include picnic tables, informative signage, trailhead markers, and portable toilets.

3. Existing Condition

Being a historic rail bed, the trail features a gentle gradient with a hard-packed crushed cinder surface. The trail characteristics vary along the entire trail. For the purpose of this report, the trail characteristics have been generalized using information gathered from topographic data and field research that occurred on July 31, 2009. See Appendix L for a location map of photographs used in this report. There was one existing at-grade vehicle crossing encountered during the field visit at the intersection with Storm Ranch Road. The crossing was posted with stop signs for trail users and vehicular users, and it contained removable bollards to prevent vehicular traffic from entering the trail off of Storm Ranch Road.

Overall, the trail traffic that was encountered was light to moderate and the trail width provided adequate space to pass other users. The data was sampled from an area in the immediate vicinity of the proposed Road 39 crossing. The table below summarizes the existing characteristics that were assumed based on field observations and research. These characteristics are discussed throughout this report.

Characteristic	**Parameter**
Longitudinal Slope (%)	0% - 3%
Cross Slope (%)	0.0% - 1.5%
Clear Width (ft)	6' – 12'
Vertical Clearance (ft)	12' – Box Culvert Under SR89A
Trail Embankment (H:V)	1.5:1 (H:V)
Surface Type	Hard Packed Crushed Rock and Cinders
Users Type	Pedestrian, Bicycle, Equestrian
Average Number of Users Per Day*	77-158

*See Appendix A for calculation

Longitudinal Slope

Longitudinal slope is defined as the slope parallel to the direction of travel. Measurements were taken at random locations to determine the longitudinal slope. The longitudinal slope was measured using a "smart tool". The "smart tool" was placed on the trail, in locations void of rocks, and a measurement was recorded. Longitudinal slopes of 0.0 to 3.0 percent were observed from the Sundog trailhead to the SR89A trailhead.

Cross Slope

Cross slope is defined as the slope measured perpendicular to the direction of travel. Measurements were taken perpendicular to the trail centerline at random locations to determine the cross slope. The cross slope was measured using a "smart tool". The "smart tool" was placed on the trail, in locations void of rocks, and a measurement was recorded. Super-elevated cross slopes of 0.0 to 1.5 percent were observed from the Sundog trailhead to the SR89A trailhead. However, an area between the SR89A trailhead and the SR89A parking lot had cross slopes of approximately 17%. It is anticipated that this area will be modified during or after the construction of the

Cross slope and width measurements.
See Appendix L for photo location map.

Granite Dells Parkway Traffic Interchange project to provide slopes that are consistent with user expectations.

Clear Width

Clear width is defined as the trail width that is free from obstructions. Measurements were taken perpendicular to the trail centerline at random locations, handrails, fencing, and bollards to determine the clear width. The clear width was measured using a measuring tape. Clear widths varied from 9 to 12-feet along the trail. In locations where handrails are present the clear width was a consistent 12.5-feet. The existing at-grade crossing at Storm Ranch Road and the Peavine Trail utilizes bollards to limit access. The clear width between the bollards shown in the picture above was approximately 6-feet.

Existing at-grade crossing. Looking northeast. See Appendix L for photo location map.

Vertical Clearance

Vertical clearance is the minimum unobstructed vertical passage space along the trail. The vertical clearance along the Peavine Trail from the Sundog trailhead to the SR89A trailhead was observed to be in excess of 15 to 20-feet. The only existing vertical obstacle was overhanging tree limbs.

The vertical clearance along the Peavine Trail from the SR89A trailhead to the north side of SR89A is 12-feet. This existing vertical obstacle is the reinforced concrete box culvert under SR89A that is scheduled to be improved with the SR-89A Granite Dells Parkway plans by Parsons Engineering.

Trail Embankment

Trail embankment is defined as the cut/fill slope resulting from the railroad improvements. Measurements were taken perpendicular to the trail centerline at random locations to determine the trail embankment slopes. Trail embankment slopes were measured using a "smart tool". The "smart tool" was placed on the cut/fill slopes and a measurement was recorded. Trail embankment slopes were consistently around 33° (1.5:1). It is assumed that this was the criteria that the Santa Fe Railway used when the railroad was built. Many slopes were over 20' high, and no fall protection was present along the trail.

Surface Type

The surface type was classified based on field observations. A majority of the trail consists of hard packed crushed cinders. The hard packed crushed cinders provide a firm and stable surface for trail users.

A small portion of the trail has pockets of sand or thick cinders which cause difficultly for users. These areas have most likely been caused by drainage being routed over the trail resulting in deposition of material.

User Type

The users observed during the site investigation were pedestrians and bicyclists. No equestrian or wheelchair users were observed during the site investigation.

Number of Users

Appendix A contains 2008 usage data provided by the City of Prescott Parks, Recreation and Library Department. The data was generated by an optical counter located near the Sundog trailhead. The data assumes that the users arrive and depart from the Sundog trailhead. Therefore the data needs to be divided by two to reflect the actual users. The handwritten corrections in Appendix A were provided by the City of Prescott Parks and Recreation Department.

The trail data shows that the two busiest days occurs on the weekends (138 and 158 average users per day). The traffic on Road 39 will be at a minimum on the weekend due

to the nature of the commercial/industrial businesses. Therefore vehicular and trail peak usage will most likely not coincide on the same day.

The SR89A trailhead, as shown in the Parsons Engineering plans for the SR89A-Granite Dells Parkway improvement plans provides 56 standard parking stalls. The data provided by the City of Prescott for the Sundog trailhead has 85 standard parking stalls. Therefore, it is anticipated that the north portion of the trial near SR89A will get less use than is reflected on the usage data gathered at the Sundog trailhead.

Conclusion

Based on field investigations, portions of the trail do not currently meet the Americans with Disabilities Act (ADA) standards. More specifically there are sections that have eroded resulting in abrupt cross slopes. However, the existing trail characteristics at the proposed Road 39 crossing do meet ADA standards for width, cross slope and longitudinal slopes.

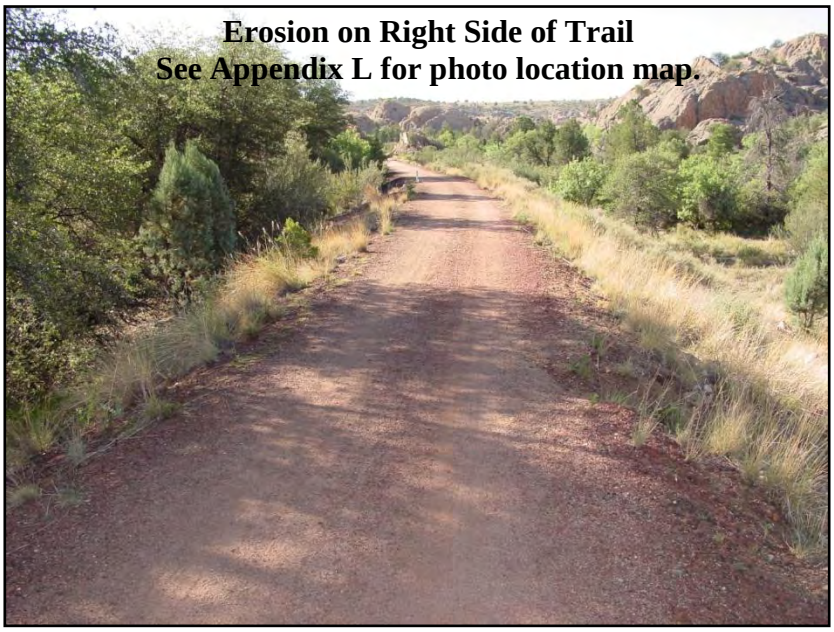

Erosion on Right Side of Trail
See Appendix L for photo location map.

A proposed trailhead has been designed as part of the SR89A-Granite Dells Parkway project by Parsons Engineering. This trailhead will provide the most direct access to the subject trail crossing. The proposed trailhead does provide curb ramps and sidewalks that meet ADA standards.

Cross Slope Exceeding ADA Standards at North Trailhead
See Appendix L for photo location map.

4. Design Criteria

The ADA states that newly designed facilities are required to be accessible, and the City of Prescott has made this a design requirement. A set of criteria was established based on the ADA, American Association of State Highway and Transportation Officials (AASHTO) and existing site conditions. The table summarizes the criteria that must be met:

Criteria	Parameter	Source for Criteria
Longitudinal Slope (%) w/ landings	8.33	ADA
Longitudinal Slope (%) w/o landings	5.00	ADA
Cross Slope (%)	2.0 max.	ADA
Clear Width (ft)	3.0 min.	ADA
Vertical Clearance for overpass (ft)	17	AASHTO
Vertical Clearance for underpass (ft)	12	SR89A and Peavine crossing
Horizontal Clearance/Span (ft)	100	Dictated by right of way and slopes
Change in Level/Tread Obstacles (in)	0.25 max.	ADA
Handrail Height (in)	36	ADA
Handrail Height (in)	42	FHWA (shared use path)
Handrail Diameter (in)	1.25-1.50	ADA
Speed Limit (mph)	35	Granite Dells Estates Traffic Report
Sight Distance (ft) – Eastbound	360	AASHTO
Sight Distance (ft) – Westbound	400	AASHTO
Traffic Volumes (Road 39 2-way vpd)	2,300	Traffic Report - Granite Dells Estates

The following sections summarize how these design constraints were incorporated into the design.

Longitudinal Slope

The 8.33-percent grade with 5-foot landings was not incorporated in the design. The transition/grade break from the 8.33-percent to the 5-foot flat landings would require recurring maintenance, especially with the amount of traffic that is anticipated on the trail. This option would be feasible only if the proposed ramp surface was concrete or asphaltic concrete.

The 5-percent grade option was used in the design. A 5-percent grade is slightly steeper than user expectations, however it meets ADA requirements and is not considered a ramp. A flatter approach could be used, but would result in an increase in the length of the approaches.

Cross Slope

The designed trail section has a 1-percent cross slope towards the low (east) side. The 1-percent slope will allow water to drain off the trail while maintaining compatibility with ADA criteria.

Clear Width
The clear width of the bridge and approaches is 12-feet. This is the distance from the inside edge of the handrails or usable surface. In order to achieve the 12-foot clear distance on the approaches, the width needed to be 16-feet to incorporate 2-foot shoulders for the handrail footings.

Vertical Clearance
The AASHTO recommended vertical clearance for the bridge is 17-feet. Due to the existing slope of the terrain, the bridge low chord varied from the 17-foot minimum to approximately 18-feet.

The vertical clearance for the underpass options were based off of the existing underpass at State Route 89A and the Peavine rail. This existing reinforced concrete box culvert is 12-feet tall. It was assumed that this underpass should match the existing underpass to maintain a consistent experience for trail users.

Horizontal Clearance/Span
The 100-foot bridge span will provide adequate clearance for the Road 39 pavement, curb, gutter, sidewalk and abutments. The benefit of placing the abutments well behind the sidewalk is the space it creates for sloping and/or terracing of walls resulting from the abutment. It also allows for adequate sight distance for approaching drivers.

Change in Level/Tread Obstacles
The recommended surface type is crushed rock to match the existing condition. This surface shall contain a wide gradation of material to provide a level surface. Special attention needs to be provided in the final improvement plans at the interface of any grade separated crossings and the trail. The contractor needs to ensure that a smooth transition is provided to avoid abrupt changes in level.

Handrail Height
The overall recommended handrail height is 54-inches based off of specifications provided by bridge manufacturers. One consistent height should be used on the bridge and on the approaches. An intermediate railing should be placed 34- to 38-inches above the ground to satisfy ADA requirements while the total rail height has to be at least 42-inches to satisfy Federal Highway Administration (FHWA) requirements.

Handrail Diameter
A handrail diameter of 1.25- to 1.50-inches should be implemented to meet ADA requirements.

Design Speed
The traffic report prepared for the Granite Dells Estates subdivision has been drawn on to determine the design speed for Road 39. The speed limit is 35 miles per hour (mph). The design speed was derived by adding 10 mph to the proposed posted speed limit.

Sight Distance
The sight distance has been determined using AASHTO guidelines. Based on the design speed and the longitudinal road grade, a sight distance of 360-feet (eastbound) and 400-feet (westbound) has been determined. Appendix B contains the sight distance calculation.

Traffic Volumes
Traffic volumes for Road 39 have been projected in a traffic study performed by CTE Inc. dated January 22, 2009. Based on the intended land uses, the 2030 projected traffic for Road 39 is 6190 daily 2-way trips per day. Based on the anticipated turn movements on Road 39 as shown in CTE's report, an average daily traffic volume at the Peavine Trail crossing was estimated to be 1,945 2-way trips. Adding a 20% contingency to the 1,945 trips provides an estimated daily 2-way trip volume of 2,300 as shown in Appendix H.

5. Evaluation of Crossings

The following paragraphs will discuss the crossing types; at-grade, above grade (Peavine overpass), and below grade (Peavine underpass). The below grade option will have two alternatives; Road 39 at designed grade and Road 39 at an elevated grade. The final option is a below grade (Peavine underpass) at an alternate location. Conceptual drawings of these crossings are located in Appendix C.

The proposed location of the crossing as shown in the at-risk grading plans by Lyon Engineering dated July 29, 2009 show the crossing at the interface of the Granite Dells Ranch and Granite Dells Estates property. The crossings are presented in the order of recommendations, from high to low.

5.1 Option 1 - At-Grade

The at-grade crossing will consist of the trail and Road 39 being built at the same grade, and at the same location proposed in the Granite Dells Estates Phase 1A planset. This crossing will require trail users and vehicular traffic to cross paths and use good judgment to avoid conflicts at the crossing location. A detailed conceptual drawing of the crossing is located in Appendix C1. A simplified exhibit is shown below.

Plan View: At-Grade Crossing

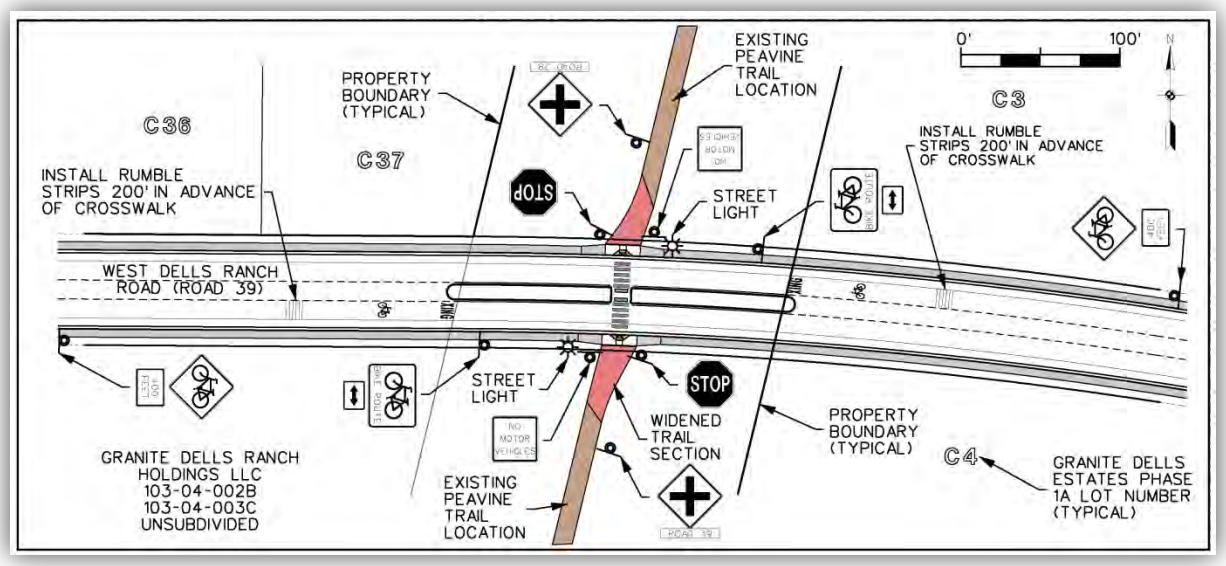

Key Components

The key components of the at-grade crossing will be appropriately designed curb ramps, clear/concise signage and traffic calming for both Road 39 vehicular traffic as well as trail users. The curb ramps will need to incorporate appropriate grades and detectable warnings to ensure ADA compliance.

Appropriate signage and striping at the crossing will be vital for the success of the at-grade crossing. At a minimum, signage and pavement markings should be per Figure 9B-3 in the Manual on Uniform Traffic Control Devices (MUTCD). A copy of this figure has been provided in Appendix G. In addition to the recommended signage and pavement markings, the following are also recommend:

- All signs shall consist of highly reflective material.
- A supplemental plaque with the words “400 Feet” is used in conjunction with the bicycle crossing warning sign.
- Rumble strips be installed to increase driver senses that a crossing is ahead.

The traffic calming measures should include a 10-foot wide raised center island located along the centerline that will provide a safe refuge for trail users. A longer island and curvilinear approach was contemplated in the initial design stage, however access management issues could be created within adjacent parcels that eliminated this option as

a possibility. It is also recommended that a raised crosswalk should also be implemented to increase driver awareness.

Geotechnical and Structural Components

Geotechnical and structural components will not be an issue since construction of the at-grade crossing will be consistent with general roadway construction improvements.

Drainage

The drainage for this crossing has been designed with the Granite Dells Estates Phase 1A plans. In the post developed condition, approximately 120 cubic feet per second (cfs) exits Granite Dells Estates at this location during the 100-year rainfall event. This drainage has been designed to flow diagonally across and beneath the crossing through three, thirty-six inch culverts.

Impacts

The physical impacts of the at-grade option are minimal. The at-grade crossing will not require retaining walls or cause additional cut/fill slopes. There will not be any additional right of way acquisition required to construct or maintain the crossing. Trail users will be required to stop and look both directions before proceeding, similar to the Storm Ranch Road at-grade crossing.

Advantages/Disadvantages

The advantages and disadvantages are relative based on different perspectives (i.e. from the viewpoint of the City, users, land owners, etc.). The following is a list of advantages and disadvantages. The alternatives matrix located in Appendix D provides an analytical tool for evaluating the advantages and disadvantages.

- Advantages
    - Relatively low construction cost.
    - No negative impact to adjacent property owners.
    - Does not create scaring of the land via cut/fill slopes.
    - Maintains the historic longitudinal slope of trail.
    - Consistent with the proposed Granite Dells Estates Phase 1A improvements.
    - Does not impact the proposed drainage plan. No additional costs.
- Disadvantages
    - May receive substantial public opposition.
    - Increases the potential of a vehicular/trail user conflict.
    - Trail users will need a higher level of awareness.
    - Does not meet some trail user expectation based on public comment.

5.2 Option 2 - Grade Separated-Peavine Overpass

The grade separated overpass option consists of the trail passing over Road 39. This crossing will eliminate interaction between the pedestrian/bicycle trail users and vehicular traffic. Equestrian traffic will be given the option to use an at-grade crossing at Road 39. The bypass will also allow access to Road 39 from the Peavine for all users. This crossing option will eliminate the need for forced interaction between the trail users and vehicular traffic. A detailed conceptual drawing of the crossing is located in Appendix C2. A simplified version of the exhibit is shown below.

Plan View: Grade Separated-Peavine Overpass

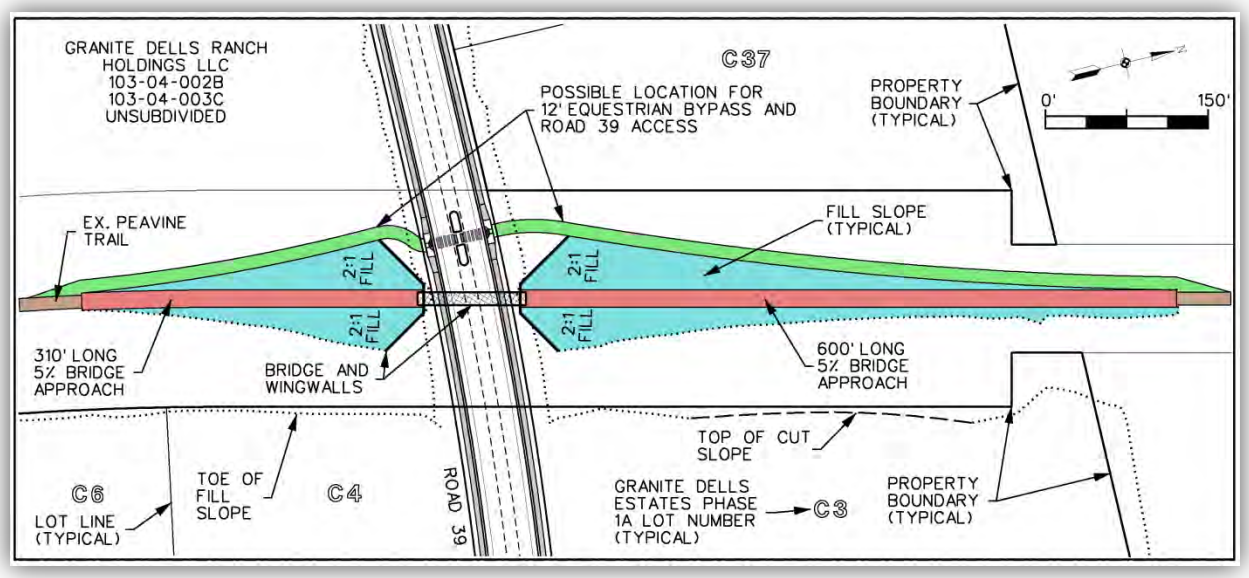

Profile View: Grade Separated-Peavine Overpass

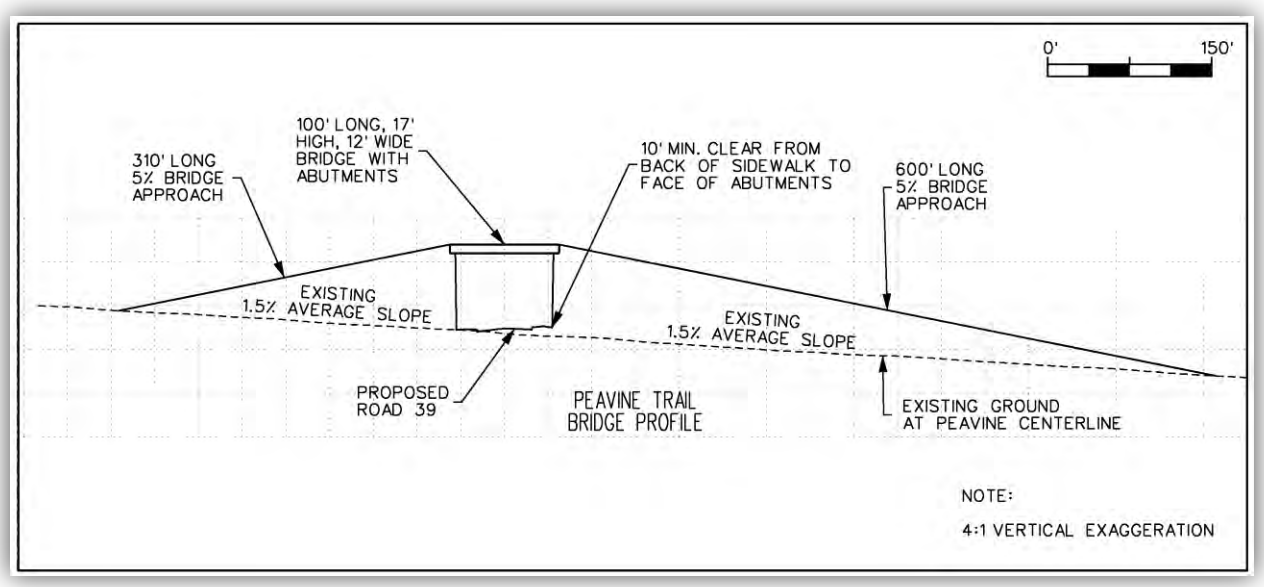

Key Components

The key components of the grade separated overpass will be a bypass road, signage/striping, bridge and its associated appurtenances and approach grades.

The bridge is capable of supporting maintenance vehicles. However, in order to provide connectivity to Road 39, a separate bypass trail had to be included in the design. The bypass trail will allow maintenance/emergency vehicles an additional access point to the trail. This bypass road can also be utilized by equestrian users to promote a safe environment for all users. The signage and striping for the bypass road will be consistent with the at-grade crossing alternative.

The bridge will be free span (no piers) and shall incorporate handrails per ADA requirements. Additional fall protection on the bridge (i.e. chain link fence) has not been provided since a majority of the bridges in the area also do not incorporate this feature. Per the City of Prescott requirements, the bridge must be able to support loads equivalent to a compact pick-up truck. Lighting under the bridge shall be incorporated to deter vandalism and provide increased driver awareness during periods of low light. Bridge schematics and corresponding documentation for potential solutions are located in Appendix E.

The approach grades shall conform to ADA requirements. Handrail has been provided on the shoulders of the approaches. The length of the 5-percent approach grades are 310-foot and 600-foot northbound and southbound respectively. The resulting fill slopes shall conform to the City of Prescott Land Development Code (LDC) requirements regarding slopes, permanent erosion control, benches, height, etc.

Geotechnical and Structural Components

Geotechnical and structural components will be a major element. The soils for the approach ramps could possibly come from adjacent areas. The geotechnical analysis by ETC states that the native soils are satisfactory for support of foundations and box culvert structures. Appendix I contains the geotechnical analysis. The soils for the approach ramps also need to be tested once they are placed to ensure adequate compaction. The structural component will consist of the abutments and wing walls. Proper design of these elements will be crucial for safety and the life cycle of the overpass.

Drainage

In the post developed condition approximately 120 cfs exits Granite Dells Estates at this location. This drainage has been designed to flow diagonally across and beneath the crossing through three, thirty-six inch culverts. The drainage for this crossing can utilize a similar designed as shown in Granite Dells Estates Phase 1A plans. The notable difference in the drainage design will be the increase in pipe length to move the inlet/outlet away from the wingwalls. For this crossing alternate, the culverts and associated headwalls will need to be coordinated with the proposed wingwalls, head-walls and abutments to avoid conflicts. A small area east of the outlet headwall will need to be filled to prevent ponding water as shown in Appendix C2.

Impacts
The physical impacts of the bridge will be extensive and obvious to trail users and adjacent property owners. The fill slopes resulting from the approaches will be approximately 20-feet high. The fill slopes will need to be a maximum of 2H:1V based on the geotechnical report to minimize erosion and avoid hard armoring. This embankment will result in a maximum 40-foot horizontal slope extending perpendicular away from the edge of approaches. The bridge itself can be "dressed-up" with a variety of options to reduce the aesthetic impact. These options include concrete/wood deck, weathered steel, painting, etc., but will add to the overall cost depending on the desired look. Bridge options and corresponding documentation are located in Appendix E.

The bridge option will provide the trail users with an experience that eliminates vehicular conflicts for users. However, the lengthy approach grades will exceed any other existing longitudinal slope on the trail, and may challenge certain trail users.

Phasing
Phasing could be incorporated to build an at-grade crossing now and implement the bridge at a future date to provide a higher level of service. The bridge and abutments could be built in the future without negatively impacting the functionality of Road 39. The cost of implementing the bridge in the future will not require the removal of any Road 39 infrastructure. However, a bypass road will need to be built at the time of bridge construction. Based on recommendations from the Highway Capacity Manual and the GDE 2030 projected traffic volumes and capacity analysis, a grade separated crossing is not currently warranted.

Advantages/Disadvantages
The advantages and disadvantages are relative based on different entities (i.e. from the viewpoint of the City, users, land owners, etc…). The following is a list of advantages and disadvantages. The alternatives matrix located in Appendix D provides an analytical tool for evaluating the advantages and disadvantages.

- Advantages
    - Eliminates pedestrian and vehicular conflicts.
    - No substantial improvements are required regarding property encroachments, drainage, and right-of-way.
    - Allows access to/from Road 39 via bypass road.
- Disadvantages
    - Moderate to high construction cost.
    - Creates scaring of land via fill slopes and large amount of earthwork involved.
    - 5-percent approach grades change the difficulty level of the trail.
    - Poor sight distance for trail users as they approach the bridge.

5.3 Option 3 - Grade Separated - Peavine Underpass - Road 39 Elevated
The grade separated underpass will consist of the trail passing under Road 39. This option raises the Road 39 design grade and maintains the historic grade of the Peavine Trail. This crossing will eliminate the need for forced interaction between the trail users

and vehicular traffic. This option does not propose connectivity between the Peavine Trail and Road 39. A detailed conceptual drawing of the crossing is located in Appendix C3. A simplified version of the exhibit is shown below.

Plan View: Grade Separated-Peavine Underpass-Road 39 at an Elevated Grade

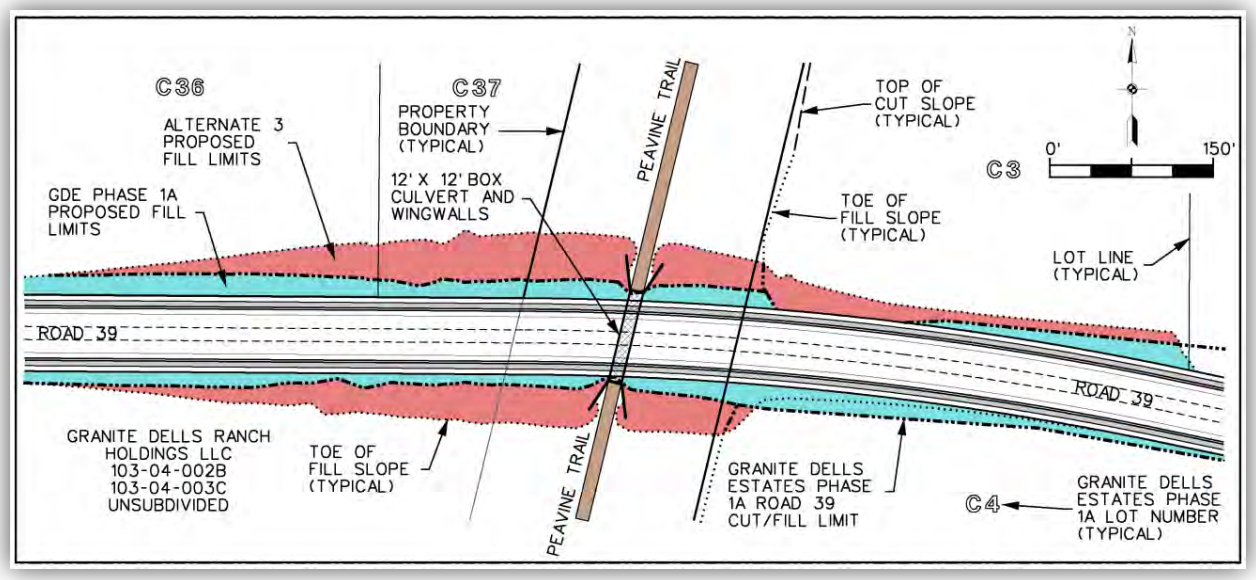

Profile View: Grade Separated-Peavine Underpass-Road 39 at an Elevated Grade

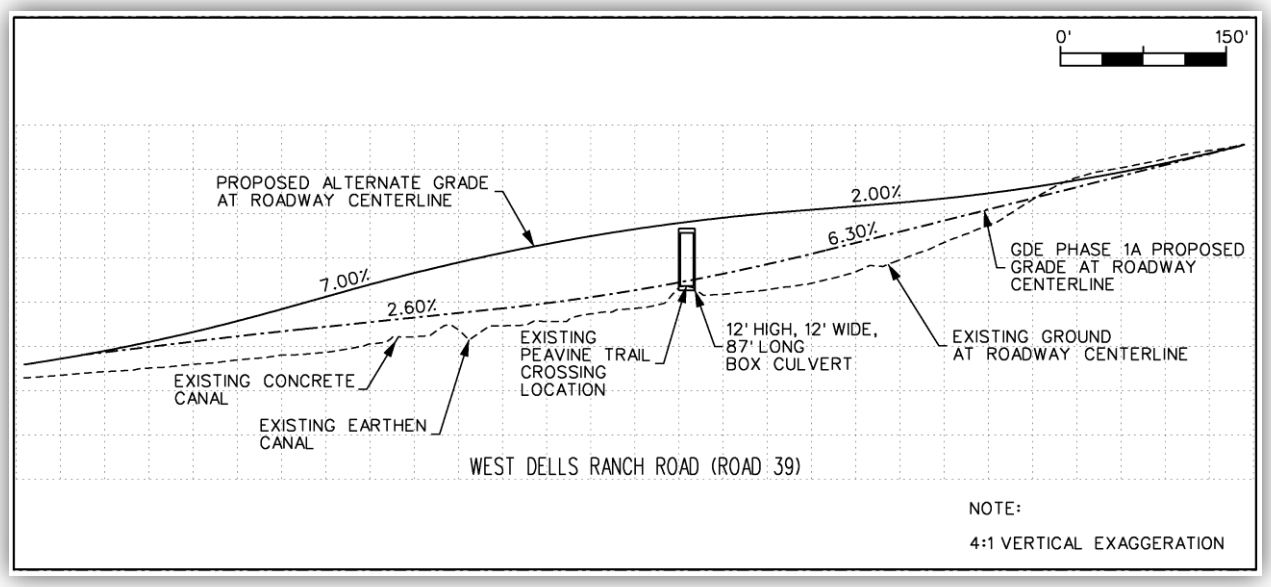

Key Components

The key components of the grade separated underpass will be a box culvert and the fill slopes resulting from the elevated Road 39. Approach grades are not an issue since the trail grade remains unchanged.

The underpass will be required to have adequate vertical clearance to accommodate all users (i.e. equestrian, bicycle). Lighting may be an issue due to the length of the underpass. Underpass schematics and corresponding documentation for potential solutions are located in Appendix E.

The underpass has limited height to allow the passage of maintenance/emergency vehicles. Due to the 3:1 side slopes and height requirements, this option is not proposing access and connectivity to Road 39. A bypass road could be incorporated in the final design but will require retaining walls and lengthy approach grades. The underpass is shown with minimal cover. Utilities will need to be routed around the structure to provide access.

Geotechnical and Structural Components

Geotechnical and structural components will be a major element. The quantity of soil material required for Road 39 is greater than what is shown on the Granite Dells Estates Phase 1A plans, creating the need to import fill material to construct the embankments. The structural component will consist of the box and wing walls. Proper design of these elements will be crucial for safety and the life cycle of the underpass.

Drainage

In the post developed condition, approximately 120 cfs exits Granite Dells Estates at this location. The original drainage design for this crossing has been designed to flow diagonally across and underneath the crossing through three, thirty-six inch culverts. However, this option would result in the drainage pipes being buried approximately 19-feet deep beneath Road 39 and the box culvert. This will make any future maintenance difficult if not impossible. A recommended alternate is to route the drainage westerly across the Peavine trail and then northerly across Road 39. This multiple pipe crossings will add cost to the alternative, but would make future maintenance of the pipes possible.

Impacts

The physical impacts of the underpass will be extensive and obvious to trail users and adjacent property owners. The fill slopes resulting from Road 39 will be approximately 14-feet high. The fill slopes will need to be a maximum of 2H:1V based on the geotechnical report to minimize erosion and avoid hard armoring. The proposed slopes are 3:1 to match the proposed slopes in the Granite Dells Estates Phase 1A improvement plans. This embankment will result in an approximate 42-foot horizontal slope extending perpendicular away from the edge of shoulder. Acquisition of land will be necessary for this design to be feasible. Approximately 0.71 acres will be required above and beyond what was already impacted by the Granite Dells Estates Phase 1A plans. However, the physical trail characteristics will remain unaffected since the vertical alignment of the Peavine trail is unchanged.

The underpass may create an impassable or uncomfortable trail section for equestrian users whose horses are not trained to go through tunnels. According to the FHWA Equestrian Design Guidebook for Trails, Trailheads, and Campgrounds, horses may hesitate if the lighting is inadequate (eye adjustment), tread surface changes, or vertical clearance is reduced.

Phasing

Phasing could be incorporated to build an at-grade crossing now and implement the underpass at a future warranted date with extreme costs. It would require Road 39 to be closed to install the underpass. Curb, sidewalk, pavement would need to be sawcut and removed. Utilities will need to be shut-off, removed and relocated during the underpass construction. Realistically, this alternate requires all improvements to be built at once, and should not be phased.

Advantages/Disadvantages

The advantages and disadvantages are relative based on different entities (i.e. from the viewpoint of the City, users, land owners, etc.). The following is a list of advantages and disadvantages. The alternatives matrix located in Appendix D provides an analytical tool for evaluating the advantages and disadvantages.

- Advantages
    - Eliminates trail user and vehicular traffic conflicts.
    - No change to the vertical alignment of the trail. No approach grades.
- Disadvantages
    - Utilities and drainage structures would be located to route around the underpass. This would increase the cost due to the increased amount of material.
    - The amount of fill required cannot be generated from nearby City owned property. The material would need to be hauled in resulting in increased construction cost.
    - The Granite Dells Estates Phase 1A subdivision would need to be redesigned to accommodate the raised Road 39. The cost and time delay required to complete the redesign will probably not be well received by the Granite Dells Estates developer.
    - Creates scaring of land via fill slopes and large amount of earthwork involved.
    - Property acquisition and/or retaining walls will add cost to the alternative.
    - Provides no connectivity to Granite Dells Estates and Road 39.

5.4 – Option 4 - Grade Separated-Alternate Location-Peavine Underpass-Road 39 at an Elevated Grade

The City of Prescott has requested an evaluation of an alternate location for a proposed underpass crossing. An exhibit showing both the proposed and alternate location of the crossings is located in the exhibit on the following page. A culvert was selected for this alternative because the cost would be less than a bridge structure, abutments, and required appurtenances.

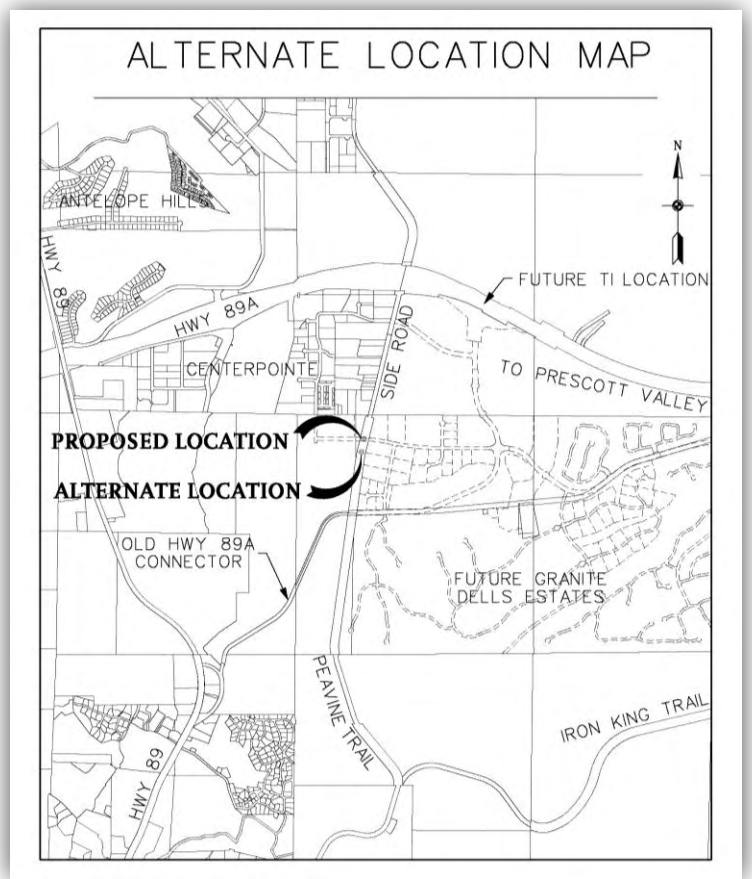

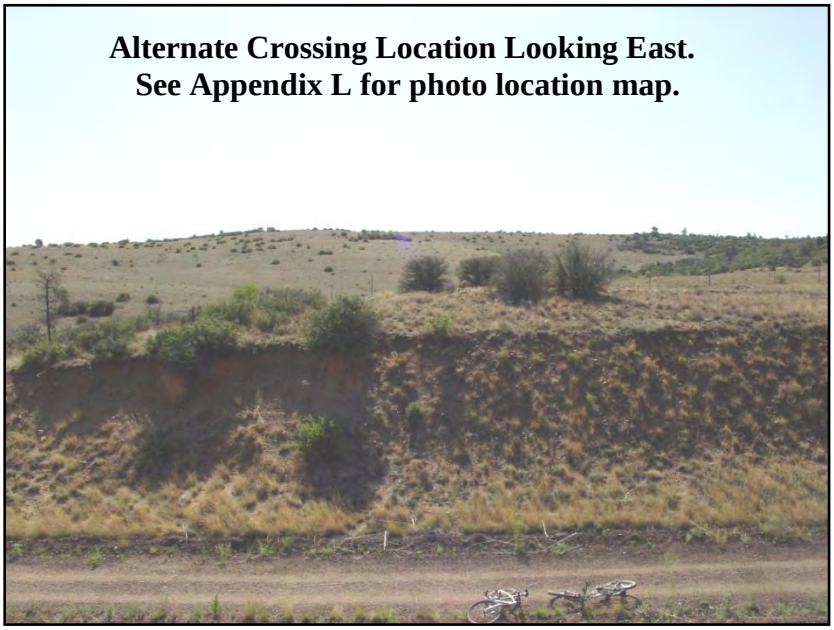

The alternate location of the crossing is south of the location as shown in the at-risk grading plans by Lyon Engineering dated August 12, 2009. The alternate location is situated in an area where the trail is in an approximate 14-foot cut. This crossing will eliminate the need for forced interaction between the trail users and vehicular traffic. A detailed conceptual drawing of the crossing is located in Appendix C4. A simplified version of the exhibit is shown on the following page.

Plan View: Grade Separated-Alternate Location-Peavine Underpass-Road 39 at an Elevated Grade

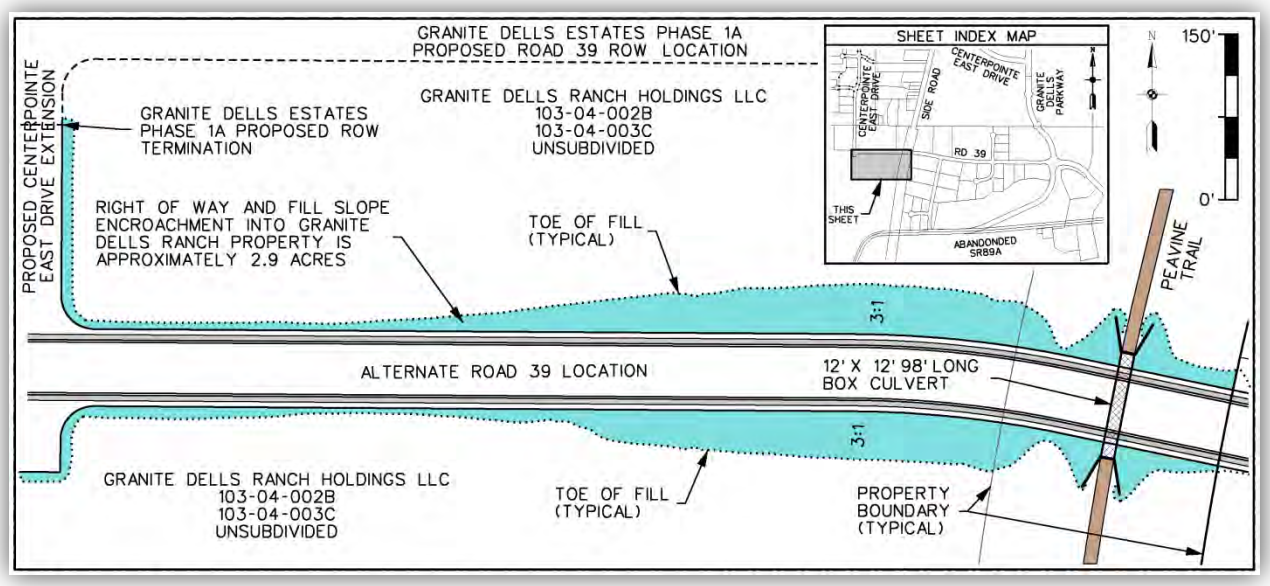

Profile View: Grade Separated-Alternate Location-Peavine Underpass-Road 39 at an Elevated Grade

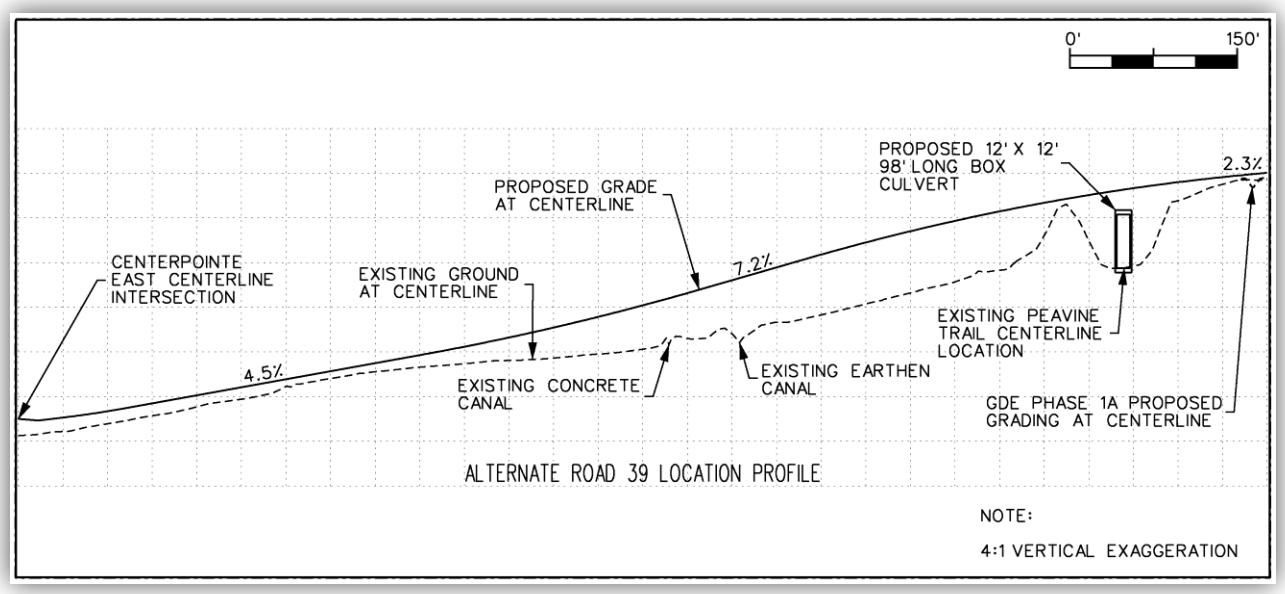

<u>Key Components</u>

The key components of the alternate location grade separated underpass will be a box culvert and the resulting fill slopes on Granite Dells Ranch property from Road 39. Approach grades are not an issue since the trail grade remains unchanged.

The alternate location underpass will be required to have adequate vertical clearance to accommodate all users (i.e. equestrian, bicycle). Lighting may be an issue due to the underpass' length. Underpass schematics and corresponding documentation for potential solutions are located in Appendix E.

The fill slopes from Road 39 encompass a swath approximately 160-foot wide at the widest point. Right-of-way will need to be purchased from the Granite Dells Ranch owner to make this option feasible. The resulting fill slopes shall conform to the City of Prescott Land Development Code (LDC) requirements regarding slopes, permanent erosion control, benches, height, etc. Due to the 3:1 side slopes and height, this option is not proposing access and connectivity to Road 39. A bypass road could be incorporated in the final design but will require retaining walls and lengthy approach grades.

Geotechnical and Structural Components

Geotechnical and structural components will be a major element. The soils for the approach ramps could possibly come from adjacent areas based on the recommendation in the geotechnical analysis. Appendix I contains the geotechnical analysis. The soils for the approach ramps also need to be tested once they are placed to ensure adequate compaction. The structural component will consist of the abutments and wing walls. Proper design of these elements will be crucial for safety and the life cycle of the underpass.

Drainage

From a drainage standpoint the underpass alternative functions best at this alternate location. Draining water from the inside of the underpass can be achieved since the underpass is at grade. In addition, this alternate location is not located in a historic drainageway therefore eliminating pipes.

Impacts

The physical impacts of the alternate location underpass will be severe. The fill slopes extending onto the Granite Dells Ranch property will be highly visible. A redesign of Granite Dells Estates will impact the developer by causing a redesign of Road 39, numerous commercial pads and drainage facilities.

The underpass may create an impassible or uncomfortable trail section for equestrian users whose horses are not trained to go through tunnels. According to the FHWA Equestrian Design Guidebook for Trails, Trailheads, and Campgrounds, horses may hesitate if the lighting is inadequate (eye adjustment), tread surface changes or vertical clearance reduces.

Phasing

Phasing of this option is not feasible. If the at-grade alternate was to be built first at the existing location, it would not be feasible to relocate Road 39 at a later date as shown in this option.

Advantages/Disadvantages

The advantages and disadvantages are relative based on different entities (i.e. from the viewpoint of the City, users, land owners, etc.). The following is a list of advantages and disadvantages. The alternatives matrix located in Appendix D provides an analytical tool for evaluating the advantages and disadvantages.

- Advantages
  - Eliminates the potential for vehicular and trail user conflict.
  - It will make the below grade crossing (underpass) more feasible since it is not located in a historic drainage low point.
  - Eliminates three, thirty-six inch culverts at the Road 39 and Peavine crossing.
- Disadvantages
  - It will further negatively impact the Granite Dells Ranch property by bisecting the parcel.
  - The fill slope resulting from the Road 39 western approach would require a right-of-way acquisition from the Granite Dells Ranch property owner.
  - The Granite Dells Estates Commercial subdivision would need to be redesigned.
  - Centerpointe East Drive would need to be extended approximately 315-feet south to provide connectivity to Road 39.
  - Road 39 west of the Peavine trail would be within the county and may be more difficult to annex since it has no frontage to City property.
  - Fill slopes falling outside of the 70-foot right of way would need to be retained or the entire width would need to be acquired.
  - Does not provide connectivity to Granite Dells Estates or Road 39.

5.5 Option 5 - Grade Separated-Peavine Underpass-Road 39 at Designed Grade

The grade separated underpass will consist of the trail passing under Road 39. This option maintains the Road 39 design grade and lowers the grade of the Peavine Trail. This crossing will eliminate the need for forced interaction between the trail users and vehicular traffic. A detailed drawing of the crossing is located in Appendix C5. A stripped down exhibit is shown on the following page.

Plan View: Grade Separated-Peavine Underpass-Road 39 at Designed Grade

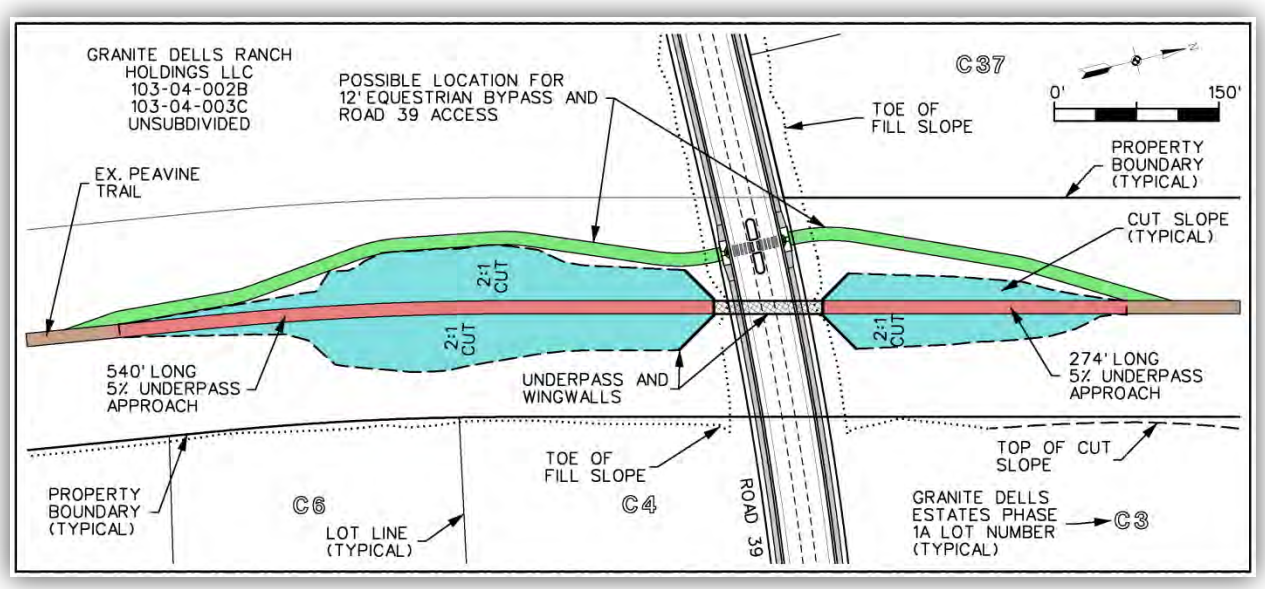

Profile View: Grade Separated-Peavine Underpass-Road 39 at Designed Grade

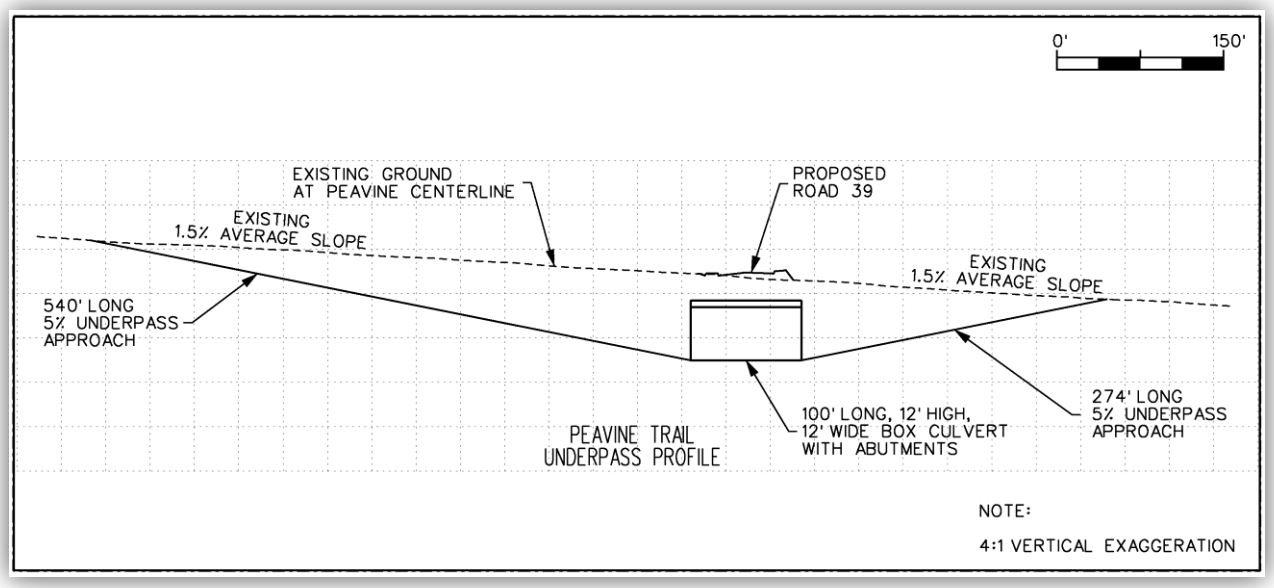

<u>Key Components</u>

The key components of the grade separated underpass will be the drainage, a box culvert, its associated appurtenances, and approach grades. Equestrian traffic will be given the option to use the at-grade crossing at Road 39.

The underpass will be required to have adequate vertical clearance to accommodate all users (i.e. equestrian, bicycle). Lighting may be an issue due to the underpass' length.

Underpass schematics and corresponding documentation for potential solutions are located in Appendix E.

The underpass has limited height to allow the passage of maintenance/emergency vehicles. However, in order to provide connectivity to Road 39 a separate bypass road was included in the design. The bypass road will allow maintenance/emergency vehicles an additional access point to the trail. This bypass road can also be utilized by all users when the box is flooded with water during a rainfall event. The signage and striping for the bypass road will be consistent with the at-grade crossing alternative.

The approach grades shall conform to ADA requirements. The length of the 5-percent approach grades are 540-foot and 274-foot northbound and southbound respectively. The resulting fill slopes shall conform to the City of Prescott Land Development Code (LDC) requirements regarding slopes, permanent erosion control, benches, height, etc.

Geotechnical and Structural Components

Geotechnical and structural components will be a major concern. The excess soils from the approach ramps need to be placed in nearby areas to reduce construction costs. These soils need to be tested once they are placed to ensure adequate compaction. Appendix I contains the geotechnical analysis. The structural component will consist of the box and wing walls. Proper design of these elements will be crucial for safety and the life cycle of the underpass.

Drainage

The drainage for this crossing will need to incorporate a pumping system. This location falls in a historic drainageway that carries 120 cfs in the 100-year event (53,860 gallons per minute) and 17 cfs in the 2-year event (7,630 gallons per minute) in the post developed condition from Granite Dells Estates. The underpass structure makes it impossible to covey the drainage diagonally across Road 39. Draining water from the inside and east of the underpass can only be accomplished with the use of a wet well, pump and piping. There is inadequate grade or City owned land to “daylight” a pipe to natural grade within a reasonable distance. The cost of the pumping system increases the cost of this alternative significantly.

Impacts

The physical impacts of the underpass will be highly visible. The cut slopes resulting from the approaches will be visible from nearby residences/businesses.

The underpass may create an impassable or uncomfortable trail section for equestrian users whose horses are not trained to go through underpasses. According to the FHWA Equestrian Design Guidebook for Trails, Trailheads, and Campgrounds, horses may hesitate if the lighting is inadequate (eye adjustment), tread surface changes or vertical clearance reduces.

Phasing

Phasing can be incorporated to build an at-grade crossing now and implement the underpass at a future warranted date with extreme costs. It will require Road 39 to be closed to install the underpass. Curb, sidewalk, pavement will need to be sawcut and removed. Utilities will need to be shut-off, isolated, removed and relocated during the underpass construction. Realistically, this alternate requires all improvements to be built at once.

Advantages/Disadvantages

The advantages and disadvantages are relative based on different entities (i.e. from the viewpoint of the City, users, land owners, etc.). The following is a list of advantages and disadvantages. The alternatives matrix located in Appendix D provides an analytical tool for evaluating the advantages and disadvantages.

- Advantages
  - Minimal modification to Granite Dells Estates Phase 1A layout.
  - No land acquisition needed.
  - Eliminates pedestrian and vehicular traffic conflicts.
- Disadvantages
  - Extensive operation, maintenance and construction cost.
  - Creates sump condition with nowhere to drain.
  - It is located in a historic low point. Requires 7,630 gallon per minute pumps to discharge 2-year rainfall event.
  - May reduce the user experience via dim tunnel.
  - 5-percent approach grades are different than historic grades and could present some difficulty to certain trail users.

6.0 Conclusions and Recommendations

Maintenance

Regular trail maintenance should be completed to ensure that the trail provides a safe environment for all users. Routine maintenance by city crews is imperative to maintaining a trail that is ADA compliant and meets the needs of all users. In addition to regular trail maintenance the following items should specifically be addressed:

- Maintain trail to repair eroded sections. These sections will only worsen over time. These sections pose hazards for users of all types.
- Improve area between trail and trailhead to ensure ADA compliance.
- Improve loose material in select areas. These areas are sporadic and could be remedied with common city owned construction equipment.

Cost Estimates

A cost estimate for all crossing types has been provided in Appendix F. Material costs were provided by manufacturers and local contractors. Land values costs were obtained from public records of recent land sales of comparable land. The value of the impacted land as it exists today was estimated at $40,000 per acre.

Lyon Engineering has no control over the cost of labor, materials, equipment, land, or services furnished by others, or over the contractor's methods of determining prices, or other competitive bidding or market conditions, practices, or bidding strategies. Cost estimates are Lyon Engineering's opinion based on experience and judgment. Lyon Engineering cannot and does not guarantee that proposals, bids, or actual project construction costs will not vary from cost estimates prepared by Lyon Engineering.

The cost estimates are based on the conceptual drawings, and therefore only take into account the level of detail provided in the drawings. Every attempt has been made to encompass all significant features that will impact the cost of the alternatives. A summary of estimated costs is shown in the table below.

Cost Estimate Summary Table:

Option Number - Description	Cost
1 – At-Grade Crossing – Road 39 Unchanged Grade and Location	$46,225
2 – Peavine Overpass – Road 39 Unchanged Location	$353,215
3 – Peavine Underpass – Road 39 Elevated at Same Location	$383,906
4 – Peavine Underpass – Road 39 Alternate Location	$422,477
5 – Peavine Underpass – Road 39 Unchanged Location	$597,811

Alternate Matrix

An alternate matrix encompassing all five crossing options is provided in Appendix D. The matrix categories were weighted based on the importance of the criteria listed, and percentage values were assigned to each category. The percentage weights assigned to each category add up to 100%. Furthermore, each category contains items used to rate each option. Each item weight under the respective category adds up to the total category weight. Assuming an option received a "10 out of 10" score for each item and category, the best possible score an option could receive would be "100".

For options scoring less than 10 out of 10 for a particular item, a proportional (adjusted weight) was calculated by multiplying the score/10 by the individual item weight. The adjusted weights were then added up to provide a total percentage score for each option. The matrix was used to assist in determining the recommended crossing solution. The option with the highest score would be more preferable than the other options. The following describes how the matrix was weighted.

- "Safety" was weighted at 30% because the health and safety of trail users is paramount.
- "Aesthetics" was weighted at 5% since the crossing will be in a highly developed area consisting of commercial/industrial businesses. None of the crossings will impact cultural, religious, historic or significant natural features.
- "Usability and Convenience" was weighted at 30% since the crossings is irrelevant unless users continue to use the trail. Bicyclists and pedestrians encompass two-thirds of the category since they encompass the majority of the users. The remaining third of users are equestrian and maintenance vehicles.
- "Cost" was weighted at 25% due to the fact that there are currently not any identified revenue source(s) for the city fund major improvements to the trail.

Any alternate that requires a redesign of adjacent development plans currently submitted to the city was rated according to the estimated cost for redesign.

- "Adjacent Property Owner Impact" was weighted at 10% since the land owners have a vested interest in the land and its potential value.

The values assigned to the matrix were derived from the advantages/disadvantages sections, Section 5.1-5.5, for each crossing. Additionally, the *general* rationale behind the values is presented below.

- The below grade underpass was assigned the lowest scores.
    - The reason for the low score for the underpass is due to the sump drainage condition that would likely create public health and safety concerns and could be an operational liability for the city. The sump condition will create an area of ponding water encompassing an underpass that will likely result in seasonal trail closures in this area. Seasonal maintenance of mud removal will result in temporary closure and on-going cost. The cost associated with purchasing, maintaining and operating the pumps make this option undesirable.
- The grade separated crossings were assigned the lowest scores in regards to cut/fill and earthwork since all alternatives encompass grading activities.
    - The scores correspond to the height/length of the cut/fill slope and quantity of material associated with each alternative.
- The grade separated crossings were assigned the lowest scores in regards to cost since all alternatives encompass costly structures.
    - The scores correspond to the estimated installed cost of the structures.
- The at-grade crossing was assigned a lower score in regards to usability.
    - The users will have to wait for a gap in traffic and have an increased level of awareness.
- Aesthetics were based on the perspective of the adjacent land owners.
    - The-at grade crossing was assigned the highest score since it will blend in with the surrounding roadways. Only signage will be visible.
    - The grade separated crossings were assigned lower scores based on the visual impact resulting from the cut/fill slopes and the crossing structure.

A graphic copy of the matrix results graph is shown on the following page.

Peavine Trail Alternative Matrix Graphical Results:

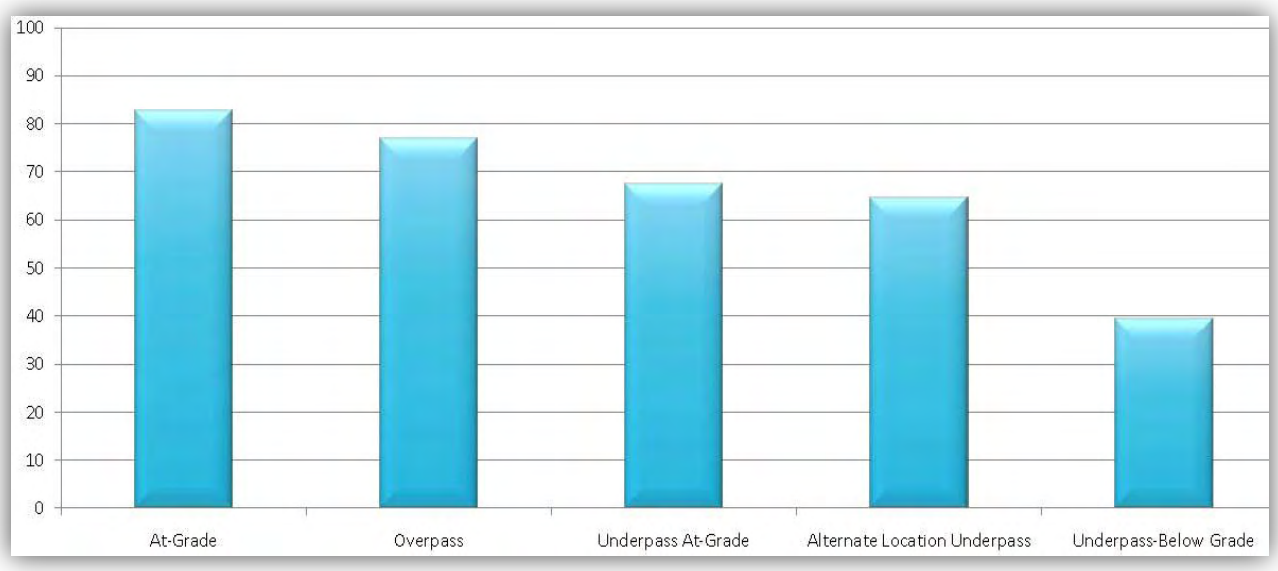

Preferred Crossing Solution

An at-grade crossing is the recommended solution at this location. This determination is based on two references that specifically address trigger points at unsignalized crossings.

- United States Department of Transportation-Federal Highway Administration, Safety Effects of Marked Versus Unmarked Crosswalks at Uncontrolled Locations, September 2005
    - Based on the design speed and the vehicular traffic on Road 39 the reference suggests that this location is a candidate site for a marked crosswalk (i.e. at-grade crossing).
        - A figure from this reference is located in Appendix K.
- Transportation Research Board, National Research Council, Highway Capacity Manual, HCM2000
    - Based on the vehicular traffic, length of crosswalk and pedestrian walking speed a level of service was determined. The level of service is a measure of effectiveness to determine the quality of service of the crossing.
    - The level of service for the at-grade crossing is 'B' based on the projected traffic volumes in year 2030. A level of service 'B' is qualified as the likelihood of a pedestrian taking a *low to moderate* risk taking behavior. The risk taking behavior in this instance is the ability of the pedestrian to judge the gap in vehicular traffic and determine if there is adequate gap to cross.
        - Figures and supporting calculations from this reference are located in Appendix J.

Shown on the following page is Exhibit 18-13 from the Highway Capacity Manual that illustrates the level of service rating system used in this analysis.

Highway Capacity Manual Exhibit 18-13

EXHIBIT 18-13. LOS CRITERIA FOR PEDESTRIANS AT UNSIGNALIZED INTERSECTIONS

LOS	Average Delay/Pedestrian (s)	Likelihood of Risk-Taking Behavior[a]
A	< 5	Low
B	≥ 5–10	
C	> 10–20	Moderate
D	> 20–30	
E	> 30–45	High
F	> 45	Very High

Note:
a. Likelihood of acceptance of short gaps.

In addition to the two references, the decision matrix was used to confirm the preferred solution. The decision matrix accounts for all aspects of the project including safety, aesthetics, usability/convenience, cost and adjacent property owner impact.

Future crossings and/or existing crossings should be evaluated using national Highway Capacity Manual and FHWA standards to determine the timing for the implementation of grade separated crossings unless a higher level of service is determined to be preferable by the city policy makers. At such a time the level of service warrants are met, an analysis of crossing alternatives shall be performed to determine an appropriate solution. It is Lyon Engineering's recommendation that the City of Prescott implement a phased approach for a separated grade crossing at the Road 39 location. A grade separated crossing should be implemented when the traffic and/or trail characteristics increase to a level of service D to E in accordance with national standards. A level of service of D to E would equate to pedestrian high risk behavior (i.e. attempting to cross with inadequate gap in vehicular traffic in accordance with the Highway Capacity Manual) resulting in an increased likelihood of vehicle and pedestrian conflicts.

7.0 References

American Association of State Highway and Transportation Officials, A Policy on Geometric Design of Highways and Streets, Fourth Edition, 2001

American Association of State Highway and Transportation Officials, Guide for the Development of Bicycle Facilities, 2001

City of Prescott, Trails, Prescott Peavine National Recreation Trail, http://www.cityofprescott.net/services/parks/traisl/?id=40

Department of Justice, 28 CFR Part 36, ADA Standards for Accessible Design, Revised July 1, 1994

National Trails Training Partnership, Accessible Trails-The Americans with Disabilities Act and Trails, http://www.americantrails.org/resources/accessible/ada.html

National Trails Training Partnership, Accessible Trails-Rulemaking on Outdoor Recreation Sites and Rights-of-Way Progress, http://www.americantrails.org/resources/accessible/accessboardnews2-09.html

Transportation Research Board, National Research Council, Highway Capacity Manual, HCM2000

United States Department of Transportation-Federal Highway Administration, Designing Sidewalks and Trails for Access Part 1 of 2 : Review of Existing Guidelines and Practices, July 1999

United States Department of Transportation-Federal Highway Administration, Designing Sidewalks and Trails for Access Part 2 of 2 : Best Practices Design Guide, September 2001

United States Department of Transportation-Federal Highway Administration, Equestrian Design Guidebook for Trails, Trailheads, and Campgrounds

United States Department of Transportation-Federal Highway Administration, Safety Effects of Marked Versus Unmarked Crosswalks at Uncontrolled Locations, September 2005

United States Department of Transportation, MUTCD 2000, Manual of Uniform Traffic Control Devices, December 2000

APPENDIX A

TRAIL USER DATA

- ORIGINAL DATA PROVIDED BY ERIC SMITH, CITY OF PRESCOTT, PARKS, RECREATION AND LIBRARY DEPARTMENT
- HANDWRITTEN COMMENTS PROVIDED BY ERIC SMITH, CITY OF PRESCOTT, PARKS, RECREATION AND LIBRARY DEPARTMENT

TTC#10250138 Charts For Data From: 11:00 - 04/01/2008 To: 21:59 - 12/31/2008

ADT By Day of Week (all lanes)

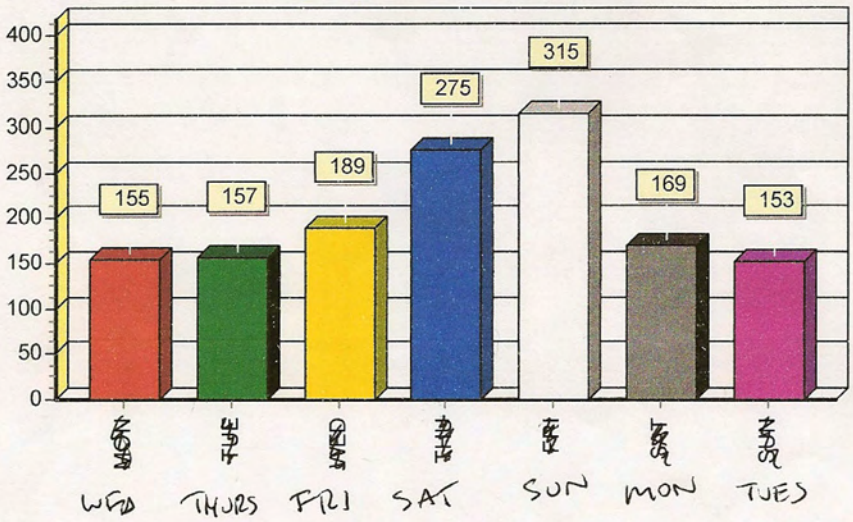

DAY	ADT	TOTAL	# DAYS
Mon	155	5571	36.0
Tue	157	5651	36.0
Wed	189	6816	36.0
Thu	275	9910	36.0
Fri	315	11332	36.0
Sat	169	6069	36.0
Sun	153	5510	36.0

Percent of Totals by Day of Week

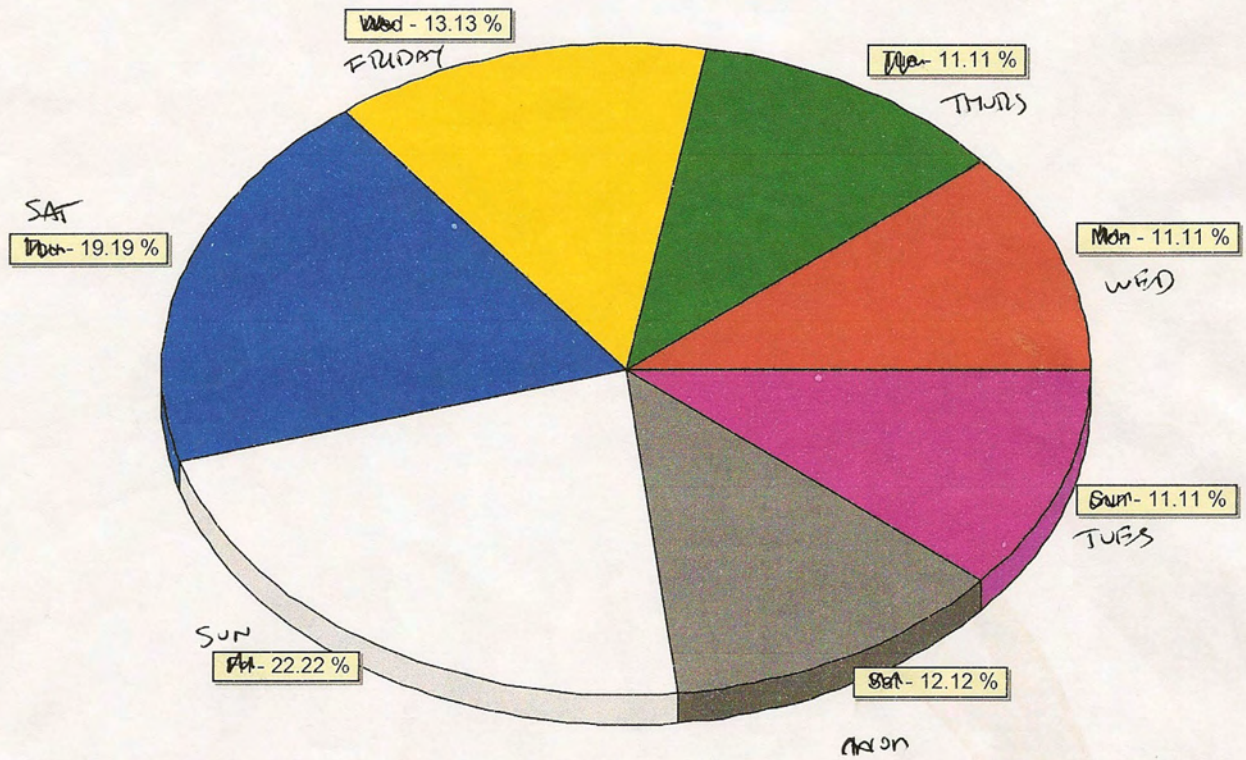

TTC#10250138 Charts For Data From: 11:00 - 04/01/2008 To: 21:59 - 12/31/2008

ADT Volume vs. Time (all lanes combined)

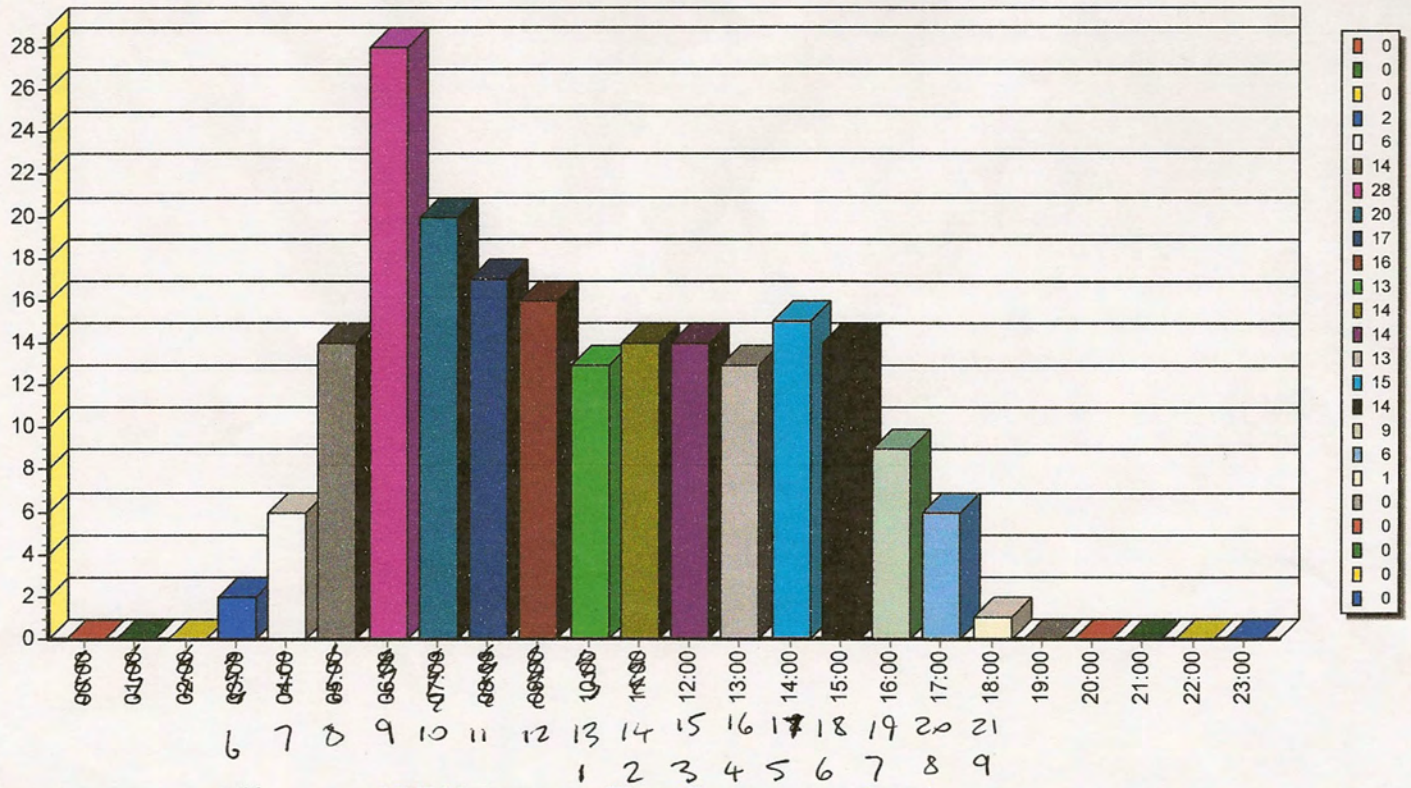

ADT Volume vs. Time (lane comparison)

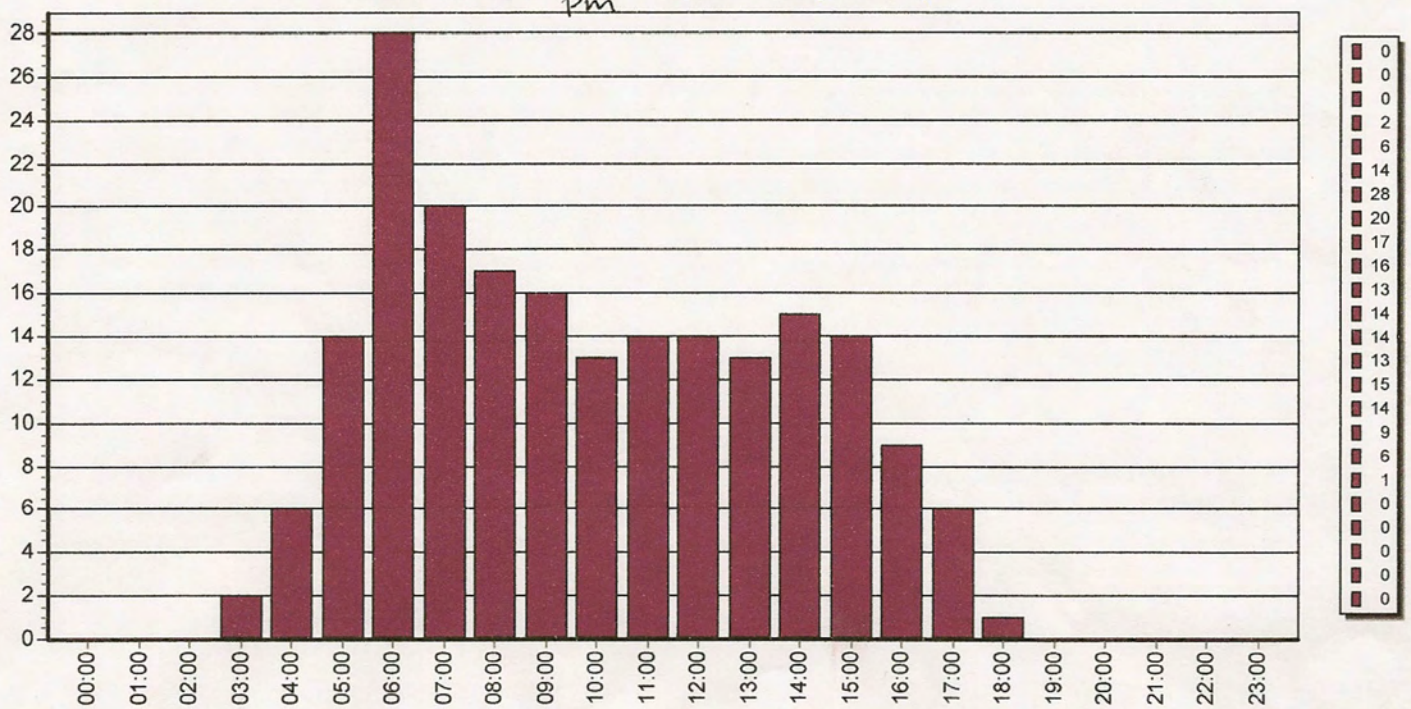

Basic Volume Report: TTC#10250138

Station ID : TTC#10250138
Info Line 1 : Peavine Trail
Info Line 2 : (TTC#10250138)
GPS Lat/Lon :
DB File : TTC#10250138.DB

Last Connected Device Type : TTC442X
Version Number : 1.00
Serial Number :
Number of Lanes : 1
Posted Speed Limit :

Lane #1 Configuration

#	Dir.	Information	Volume Mode	Volume Sensors	Divide By 2	Comment
1.			Normal	Pres	No	÷ 2

Lane #1 Basic Volume Data From: 11:00 - 04/01/2008 To: 21:59 - 12/31/2008

9.00

5/9/08

39 DAYS BEHIND

Date	DW	0000	0100	0200	0300	0400	0500	0600	0700	0800	0900	1000	1100	1200	1300	1400	1500	1600	1700	1800	1900	2000	2100	2200	2300	Total
040108	T												11	10	5	13	12	4	5	0	0	0	0	0	0	60
040208	W	0	0	0	0	2	7	40	18	15	20	16	2	10	4	5	16	14	1	0	0	0	0	0	0	170
040308	T	0	0	0	0	9	12	40	32	36	36	27	28	26	22	22	11	30	3	0	0	0	0	0	0	334
040408	F	0	0	0	0	1	15	31	25	36	35	26	24	21	60	36	21	11	3	1	0	0	0	0	0	346
040508	S	0	0	0	0	3	4	20	18	8	12	3	7	11	3	7	8	5	0	0	0	0	0	0	0	109
040608	S	0	0	0	0	0	1	6	8	6	2	1	3	1	2	0	7	6	5	1	0	0	0	0	0	49
040708	M	0	0	0	4	2	8	28	24	32	6	10	5	21	16	16	12	8	2	2	0	0	0	0	0	196
040808	T	0	0	0	1	1	6	24	19	18	21	14	15	4	9	7	9	1	1	0	0	0	0	0	0	150
040908	W	0	0	0	1	3	5	39	41	57	8	7	17	13	7	14	12	9	1	0	0	0	0	0	0	234
041008	T	0	0	0	0	10	19	27	20	40	55	22	14	19	10	15	12	16	4	0	0	0	0	0	0	283
041108	F	0	0	0	1	15	11	33	52	21	32	20	20	13	21	20	14	6	7	0	0	0	0	0	0	286
041208	S	0	0	0	2	1	9	10	20	16	14	5	2	3	3	12	9	15	9	0	0	0	0	0	0	130
041308	S	0	0	0	4	3	9	23	5	4	4	6	3	1	6	11	21	35	5	0	0	0	0	0	0	140
041408	M	0	0	0	0	0	4	26	14	1	10	6	14	5	5	5	19	10	2	0	0	0	0	0	0	121
041508	T	0	0	0	1	2	10	11	5	0	4	11	10	1	2	11	6	2	1	0	0	0	0	0	0	77
041608	W	0	0	0	0	1	2	30	13	8	5	4	9	7	2	1	2	2	1	0	0	0	0	0	0	87
041708	T	0	0	0	0	0	0	24	15	12	43	22	10	16	0	7	8	1	0	0	0	0	0	0	0	158
041808	F	0	0	0	0	2	11	29	51	38	33	30	23	48	32	27	12	5	9	3	0	0	0	0	0	353
041908	S	0	0	0	1	4	25	48	43	47	40	48	65	40	43	18	17	5	1	0	0	0	0	0	0	445
042008	S	0	0	0	3	2	8	39	59	18	19	13	13	23	30	16	22	12	2	1	0	0	0	0	0	280
042108	M	0	0	0	1	4	8	45	33	19	21	9	4	4	9	11	11	20	7	0	0	0	0	0	0	206
042208	T	0	0	1	0	0	2	25	27	14	20	14	14	4	5	16	16	16	4	0	0	0	0	0	0	178
042308	W	0	0	0	1	4	15	36	34	25	9	4	16	7	4	8	7	12	6	5	0	0	0	0	0	193
042408	T	0	0	0	1	13	25	38	23	35	28	24	19	15	7	23	11	13	7	0	0	0	0	0	0	282
042508	F	0	0	0	3	9	22	42	31	36	40	10	27	13	29	25	13	23	11	0	0	0	0	0	0	334
042608	S	0	0	0	2	9	12	35	14	15	12	10	0	3	3	5	13	3	4	1	0	0	2	0	0	143
042708	S	0	0	0	0	2	7	18	21	22	20	9	7	8	4	4	21	17	9	1	0	0	0	0	0	170
042808	M	0	0	0	2	9	11	30	12	5	7	2	3	1	12	12	9	4	1	0	0	0	0	0	0	120
042908	T	0	0	0	2	2	14	22	9	22	12	11	5	4	10	14	14	17	3	0	0	0	0	0	0	161
043008	W	0	0	2	2	5	6	26	31	36	19	8	8	4	5	6	13	14	7	0	0	0	0	0	0	192
Month Total :		0	0	3	32	118	288	845	717	642	587	392	398	356	370	387	378	336	121	15	0	0	2	0	0	5987
Percent :		0%	0%	0%	1%	2%	5%	14%	12%	11%	10%	7%	7%	6%	6%	6%	6%	6%	2%	0%	0%	0%	0%	0%	0%	
ADT :		0	0	0	1	4	10	29	25	22	20	14	13	12	12	13	13	11	4	1	0	0	0	0	0	204

	Sun	Mon	Tue	Wed	~~Thu~~ SAT	~~Fri~~ SUN	Sat
DW Totals :	639	643	626	876	1057	1319	827
# Days :	4.0	4.0	4.5	5.0	4.0	4.0	4.0
ADT :	160	161	138	175	264	330	207
Percent :	11%	11%	10%	15%	18%	22%	14%

	Total	Percent
Weekday (Mon-Fri) :	4521	76%
ADT :	210	
Weekend (Sat-Sun) :	1466	24%
ADT :	183	

Date	DW	0000	0100	0200	0300	0400	0500	0600	0700	0800	0900	1000	1100	1200	1300	1400	1500	1600	1700	1800	1900	2000	2100	2200	2300	Total
050108	T	0	0	1	1	8	25	46	22	21	37	24	14	20	15	6	13	12	1	3	0	0	0	0	0	269
050208	F	0	0	0	0	14	19	35	41	41	13	12	20	6	15	7	18	12	3	2	0	0	0	0	0	258
050308	S	0	0	0	2	5	14	28	24	16	7	12	12	9	7	7	17	11	13	2	0	0	0	0	0	186
050408	S	0	0	0	0	2	17	39	25	18	8	2	2	5	7	8	2	3	9	2	0	0	0	0	0	149
050508	M	0	0	0	6	9	10	30	21	14	7	8	7	9	8	8	8	10	11	0	2	0	1	0	0	169
050608	T	0	0	1	2	4	14	34	26	14	10	10	3	4	9	13	12	5	9	0	0	0	0	0	0	170
050708	W	0	0	0	3	18	14	22	24	26	10	2	3	2	4	3	9	12	12	1	2	0	0	0	0	167
050808	T	0	0	0	4	3	19	47	23	15	11	11	9	2	4	1	4	8	11	0	0	0	0	0	0	172
050908	F	0	0	0	2	13	34	39	23	21	26	6	12	2	13	6	8	9	13	1	0	0	0	0	0	228
051008	S	0	0	0	2	3	13	34	14	12	3	1	5	2	1	3	6	15	21	3	0	0	0	0	0	138
051108	S	0	0	0	4	5	15	25	39	23	3	2	3	4	3	13	16	15	6	0	0	2	0	0	0	178
051208	M	0	0	0	4	3	13	28	11	5	9	5	6	2	4	11	15	25	12	1	1	0	2	0	0	157
051308	T	0	0	0	3	16	10	34	19	9	4	4	1	2	3	5	5	20	12	2	0	0	0	0	0	149
051408	W	0	0	1	8	16	20	41	22	2	9	2	5	4	7	8	13	12	13	3	0	0	0	0	0	186
051508	T	0	0	0	3	13	21	47	17	21	14	10	5	4	16	13	17	14	13	7	0	0	0	0	0	235
051608	F	0	0	1	5	12	23	35	23	10	13	5	3	2	6	9	12	27	35	2	0	0	0	0	0	223
051708	S	0	0	2	4	8	19	25	16	8	5	0	1	6	6	6	8	16	16	0	1	0	0	0	0	147
051808	S	0	0	0	9	10	22	30	12	4	1	0	0	3	4	7	10	11	9	3	0	0	0	0	0	135
051908	M	0	0	0	7	12	10	22	18	9	2	2	4	2	8	6	13	9	4	2	0	0	0	0	0	130
052008	T	0	0	0	8	17	19	40	8	8	2	2	0	5	7	9	17	12	5	0	0	0	0	0	0	159
052108	W	0	0	0	1	7	26	16	10	12	5	3	1	2	5	4	4	12	11	2	0	0	0	0	0	121
052208	T	0	1	1	5	18	19	23	26	13	17	13	12	4	4	4	9	15	16	3	0	0	0	0	0	203
052308	F	0	0	0	8	20	26	34	29	15	14	11	11	1	4	38	10	17	16	1	0	0	0	0	0	255
052408	S	0	0	0	3	8	14	20	16	13	1	2	4	2	8	5	8	7	23	1	0	0	0	0	0	135
052508	S	0	0	0	2	5	8	29	13	3	1	3	3	1	3	0	7	7	9	0	0	0	0	0	0	94
052608	M	0	0	0	5	10	14	18	16	3	9	4	2	5	7	3	9	9	12	3	0	0	0	0	0	129
052708	T	0	0	0	7	20	19	28	8	5	4	4	5	2	0	3	10	14	7	0	0	0	0	0	0	136
052808	W	0	0	0	2	24	33	41	35	25	16	3	7	2	14	15	1	0	2	0	2	0	0	0	0	222
052908	T	0	0	0	7	9	15	23	17	20	28	17	7	12	3	14	4	40	9	1	0	0	0	0	0	226
053008	F	0	0	0	6	26	25	28	45	13	20	9	1	1	2	9	11	13	15	1	0	0	0	0	0	225
053108	S	0	0	0	2	13	16	25	15	29	17	3	4	4	5	8	3	9	8	0	0	0	0	0	0	161
Month Total :		0	1	7	125	351	566	966	658	448	326	192	172	131	202	252	299	401	356	46	8	2	3	0	0	5512
Percent :		0%	0%	0%	2%	6%	10%	18%	12%	8%	6%	3%	3%	2%	4%	5%	5%	7%	6%	1%	0%	0%	0%	0%	0%	
ADT :		0	0	0	4	11	18	31	21	14	11	6	6	4	7	8	10	13	11	1	0	0	0	0	0	176

	Sun	Mon	Tue	Wed	Thu	Fri	Sat
DW Totals :	556	585	614	696	1105	1189	767
# Days :	4.0	4.0	4.0	4.0	5.0	5.0	5.0
ADT :	139	146	154	174	221	238	153
Percent :	10%	11%	11%	13%	20%	22%	14%

	Total	Percent
Weekday (Mon-Fri) :	4189	76%
ADT :	190	
Weekend (Sat-Sun) :	1323	24%
ADT :	147	

Date	DW	0000	0100	0200	0300	0400	0500	0600	0700	0800	0900	1000	1100	1200	1300	1400	1500	1600	1700	1800	1900	2000	2100	2200	2300	Total
060108	S	0	0	1	4	9	21	28	12	12	5	13	6	8	6	5	7	14	15	0	0	0	0	0	0	166
060208	M	0	0	0	6	12	20	22	15	6	5	9	2	5	5	9	7	21	12	0	0	0	0	0	0	156
060308	T	0	0	0	7	16	16	29	15	9	1	0	4	1	1	4	0	0	0	0	0	0	0	0	0	103
060408	W	0	0	0	2	8	22	42	24	9	18	1	1	3	2	0	14	11	5	0	0	0	0	0	0	162
060508	T	0	0	0	2	19	25	36	32	6	22	7	11	7	9	2	2	8	7	0	0	0	0	0	0	195
060608	F	0	0	0	4	8	37	54	40	23	26	29	10	12	16	14	19	7	5	2	0	0	0	0	0	306
060708	S	0	0	0	1	8	16	35	18	11	7	8	8	10	4	0	6	11	7	0	0	0	0	0	0	150
060808	S	0	0	0	0	7	15	35	32	22	11	10	5	2	5	8	10	6	9	2	0	0	0	0	0	179
060908	M	0	0	0	6	4	18	31	10	11	10	4	3	5	4	7	11	12	12	0	0	0	0	0	0	148
061008	T	0	0	2	5	4	16	21	6	6	5	2	7	9	18	10	12	4	2	13	0	0	0	0	0	142
061108	W	0	0	0	5	10	69	92	21	10	19	12	0	3	4	16	25	13	6	0	0	0	0	0	0	305
061208	T	0	0	0	6	5	22	32	30	11	14	2	3	11	12	13	18	13	8	1	0	0	0	0	0	201
061308	F	0	0	0	2	6	10	20	6	4	16	9	21	24	18	10	7	6	5	1	0	0	0	0	0	165
061408	S	0	0	1	3	8	13	31	20	13	7	7	1	2	3	15	18	12	7	1	0	0	0	0	0	162
061508	S	0	0	0	5	7	8	17	15	23	18	7	6	9	10	9	21	8	3	0	0	0	1	0	0	167
061608	M	0	0	0	2	4	7	34	13	17	9	6	2	3	4	6	11	10	14	0	0	0	0	0	0	142
061708	T	0	0	0	9	13	16	22	8	9	6	9	3	9	19	9	8	9	15	2	58	17	0	0	0	241
061808	W	0	0	0	3	11	13	30	11	6	7	3	8	3	1	2	8	610	139	0	1	0	0	0	0	856
061908	T	0	0	1	6	6	22	40	26	34	25	8	9	5	4	10	21	5	9	1	0	2	0	0	0	234
062008	F	0	0	0	6	17	36	41	38	26	33	15	4	14	11	4	10	22	12	0	2	1	1	0	0	293
062108	S	0	0	1	3	11	16	32	22	16	8	3	4	0	8	1	8	18	21	0	0	0	0	0	0	172
062208	S	0	0	1	4	8	22	14	10	6	9	2	2	4	8	10	15	25	17	0	0	0	0	0	0	157
062308	M	0	0	1	8	11	17	35	14	11	2	8	1	3	5	18	19	31	10	0	0	1	0	0	0	195
062408	T	0	0	1	7	17	13	29	14	3	2	11	6	2	5	7	4	13	212	2	0	0	0	0	0	348
062508	W	0	0	5	9	12	23	27	14	9	4	3	2	6	8	11	35	5	154	12	0	0	0	0	0	339
062608	T	0	0	0	8	15	40	34	37	33	16	37	462	504	46	144	21	20	7	0	0	0	0	0	0	1424
062708	F	0	0	0	2	15	42	57	42	19	27	27	19	13	17	484	972	9	53	34	0	0	1	0	0	1833
062808	S	0	0	0	1	7	14	44	13	11	12	3	4	4	3	2	13	12	2	1	1	0	0	0	0	147
062908	S	0	0	0	2	6	13	22	14	14	10	40	7	19	9	9	9	22	7	0	0	0	0	0	0	203
063008	M	0	0	1	4	14	32	56	24	20	3	12	7	4	5	7	7	16	7	0	2	0	0	0	0	221
Month Total :		0	0	15	132	298	654	1042	596	410	357	307	628	704	270	846	1338	973	782	72	64	21	3	0	0	9512
Percent :		0%	0%	0%	1%	3%	7%	11%	6%	4%	4%	3%	7%	7%	3%	9%	14%	10%	8%	1%	1%	0%	0%	0%	0%	
ADT :		0	0	1	4	10	22	35	20	14	12	10	21	23	9	28	45	32	26	2	2	1	0	0	0	317

SPECIAL EVENT? 1ST WEEKEND IN AUGUST.

	Sun	Mon	Tue	Wed	Thu	Fri	Sat
DW Totals :	872	862	834	1662	2054	2597	631
# Days :	5.0	5.0	4.0	4.0	4.0	4.0	4.0
ADT :	174	172	209	416	514	649	158
Percent :	9%	9%	9%	17%	22%	27%	7%

	Total	Percent
Weekday (Mon-Fri) :	8009	84%
ADT :	381	
Weekend (Sat-Sun) :	1503	16%
ADT :	167	

Date	DW	0000	0100	0200	0300	0400	0500	0600	0700	0800	0900	1000	1100	1200	1300	1400	1500	1600	1700	1800	1900	2000	2100	2200	2300	Total
070108	T	0	0	0	1	10	23	22	10	18	12	12	3	3	8	5	7	9	6	0	0	0	0	0	0	149
070208	W	0	0	1	3	11	13	37	23	14	10	7	3	3	10	0	11	4	5	0	0	0	0	0	0	155
070308	T	0	0	0	3	17	39	54	18	22	35	22	26	3	15	17	22	14	5	1	0	0	0	0	0	313
070408	F	0	0	0	4	8	41	28	24	19	33	22	12	9	7	19	16	12	12	0	0	0	0	0	0	266
070508	S	0	0	0	2	15	33	42	28	9	7	1	11	5	11	4	23	19	9	0	0	0	0	0	0	219
070608	S	0	0	1	5	18	28	35	23	3	3	4	3	5	13	9	16	25	11	1	0	0	0	0	0	203
070708	M	0	0	1	3	23	21	35	7	7	2	4	1	4	6	7	18	20	4	0	0	0	0	0	0	163
070808	T	0	0	0	0	13	19	27	18	8	6	1	5	9	1	4	8	2	3	0	0	1	1	0	0	126
070908	W	0	0	0	2	10	17	29	28	4	7	12	4	6	1	8	12	10	4	0	0	0	0	0	0	154
071008	T	0	0	0	8	21	33	33	29	20	24	13	13	13	8	7	14	10	12	0	0	0	0	0	0	258
071108	F	1	0	0	2	14	29	30	27	22	38	22	14	9	15	14	18	13	9	4	0	0	0	0	0	281
071208	S	0	0	0	1	6	11	38	7	8	4	4	4	3	5	3	12	7	2	0	0	0	0	0	0	115
071308	S	0	0	1	3	9	12	35	26	5	12	7	2	2	2	7	13	17	1	0	0	0	0	0	0	154
071408	M	0	0	0	0	9	24	30	12	4	5	4	6	1	2	9	20	12	7	0	0	0	0	0	0	145
071508	T	0	0	0	0	7	13	18	10	5	11	4	2	3	3	9	11	19	4	0	0	0	0	0	0	119
071608	W	0	0	0	0	7	6	27	19	7	10	7	5	3	6	5	11	8	6	0	0	0	0	0	0	127
071708	T	0	0	0	4	19	27	40	33	25	33	12	1	4	8	12	15	12	2	0	0	0	0	0	0	247
071808	F	0	0	0	2	12	35	32	21	13	32	13	13	10	9	18	12	4	1	0	0	0	0	0	0	227
071908	S	0	0	1	5	11	20	18	11	10	7	8	9	5	7	6	13	8	2	0	0	0	0	0	0	141
072008	S	0	0	0	4	6	5	18	9	9	8	2	6	7	6	7	6	32	5	0	0	0	0	0	0	130
072108	M	0	0	0	3	13	14	25	15	4	7	3	3	0	5	9	10	9	2	0	1	0	0	0	0	123
072208	T	0	0	0	2	10	24	16	16	5	1	2	16	8	2	12	6	9	5	0	0	0	0	0	0	134
072308	W	0	0	0	2	11	18	33	25	8	9	7	2	3	15	3	8	5	5	0	0	0	0	1	1	156
072408	T	0	0	1	7	28	29	40	28	27	25	25	8	7	8	11	8	7	5	0	0	0	0	0	0	264
072508	F	0	0	0	2	12	23	36	32	36	43	18	13	28	40	28	11	6	2	0	0	0	0	0	0	330
072608	S	0	0	1	4	19	26	51	53	38	48	25	25	21	29	25	33	17	11	2	0	0	0	0	0	428
072708	S	0	0	0	2	10	18	28	8	1	3	12	8	4	8	15	29	14	3	0	0	0	0	1	0	164
072808	M	0	0	0	2	7	11	19	16	11	8	8	4	5	5	7	25	11	0	0	0	0	0	0	0	139
072908	T	0	0	0	4	6	10	27	11	6	4	7	1	2	3	8	15	11	0	0	0	0	0	0	0	115
073008	W	0	0	0	1	3	15	53	59	9	2	7	1	0	11	9	20	13	1	0	0	0	0	0	0	204
073108	T	0	0	1	6	13	26	39	24	26	24	8	4	13	17	23	15	27	12	0	0	0	0	0	0	278
Month Total :		1	0	8	87	378	663	995	670	403	473	303	228	198	286	320	458	386	156	8	1	1	1	2	1	6027
Percent :		0%	0%	0%	1%	6%	11%	17%	11%	7%	8%	5%	4%	3%	5%	5%	8%	6%	3%	0%	0%	0%	0%	0%	0%	
ADT :		0	0	0	3	12	21	32	22	13	15	10	7	6	9	10	15	12	5	0	0	0	0	0	0	192

	Sun	Mon	Tue	Wed	Thu	Fri	Sat
DW Totals :	651	570	643	796	1360	1104	903
# Days :	4.0	4.0	5.0	5.0	5.0	4.0	4.0
ADT :	163	143	129	159	272	276	226
Percent :	11%	9%	11%	13%	23%	18%	15%

	Total	Percent
Weekday (Mon-Fri) :	4473	74%
ADT :	194	
Weekend (Sat-Sun) :	1554	26%
ADT :	194	

Date	DW	0000	0100	0200	0300	0400	0500	0600	0700	0800	0900	1000	1100	1200	1300	1400	1500	1600	1700	1800	1900	2000	2100	2200	2300	Total
080108	F	0	0	0	2	6	13	40	33	24	17	5	4	10	17	17	10	12	1	0	0	0	0	0	0	211
080208	S	0	0	0	4	13	23	27	22	7	5	3	5	7	12	11	15	3	0	0	0	0	0	0	0	157
080308	S	0	0	0	1	3	14	18	6	11	12	6	2	0	19	16	4	1	0	0	0	0	0	0	0	113
080408	M	0	0	1	4	4	13	34	11	6	12	0	0	1	4	6	2	5	3	0	0	0	0	0	0	106
080508	T	0	0	0	1	8	16	33	19	11	18	8	22	7	17	9	12	6	1	0	0	0	0	0	0	188
080608	W	0	0	0	1	7	9	25	21	32	6	9	8	10	9	5	10	13	2	0	0	0	0	0	0	167
080708	T	0	0	0	2	6	21	39	25	25	16	6	12	19	9	21	11	13	0	6	1	0	0	2	0	234
080808	F	0	0	0	0	9	9	37	19	19	35	15	12	13	18	28	34	15	2	0	0	0	0	0	0	265
080908	S	0	0	0	2	4	12	38	28	17	1	3	4	5	3	14	26	9	2	0	1	1	0	0	0	170
081008	S	0	0	0	2	5	17	20	11	8	7	5	8	14	10	9	15	21	11	0	3	0	0	0	0	166
081108	M	0	0	0	2	7	21	22	18	29	9	8	2	3	7	12	12	16	2	0	0	0	0	0	0	170
081208	T	0	0	1	3	6	16	28	21	4	6	1	4	5	6	8	9	13	0	0	0	0	0	0	0	131
081308	W	0	0	1	1	5	8	29	18	24	15	11	5	6	11	20	16	5	0	0	0	0	1	0	0	176
081408	T	0	0	1	1	7	22	31	29	23	24	29	18	23	21	14	10	6	1	0	0	3	2	0	0	265
081508	F	0	0	0	0	13	37	46	52	22	17	14	20	27	21	34	17	3	0	0	0	0	0	0	0	323
081608	S	0	0	0	1	4	12	33	22	7	1	3	4	6	22	12	23	7	4	0	0	0	0	0	0	161
081708	S	0	0	1	0	6	10	42	31	13	2	10	1	2	12	10	7	9	0	0	0	0	0	0	0	156
081808	M	0	0	0	0	2	12	26	18	10	7	5	7	10	13	15	25	8	0	0	0	0	0	0	0	158
081908	T	0	0	1	3	3	7	47	19	12	4	10	6	6	6	9	7	6	1	0	1	0	0	0	0	148
082008	W	0	0	0	1	3	21	29	15	15	8	3	2	3	3	1	2	1	0	0	0	0	0	0	0	107
082108	T	0	0	0	3	11	17	38	36	29	27	16	16	12	12	8	7	0	0	0	0	0	0	0	0	232
082208	F	0	0	0	0	9	23	35	41	31	28	23	27	36	35	26	23	14	1	0	0	0	0	0	0	352
082308	S	0	0	0	0	5	13	41	25	10	13	3	5	5	4	10	10	3	0	1	0	0	0	0	0	148
082408	S	0	0	1	3	6	21	28	16	9	3	7	4	5	8	21	18	4	3	0	0	0	0	0	0	157
082508	M	0	0	2	3	2	10	32	28	20	6	5	6	17	22	18	27	12	0	0	0	0	0	0	0	210
082608	T	0	0	0	2	4	22	30	10	15	8	9	6	2	4	10	14	3	2	2	0	0	0	0	0	143
082708	W	0	0	0	0	9	15	40	25	6	5	8	8	9	7	12	10	13	0	0	0	0	0	0	0	167
082808	T	0	0	0	0	6	29	38	18	31	27	17	3	3	12	24	15	1	0	0	0	0	0	0	0	224
082908	F	0	0	0	0	5	23	38	39	47	53	26	35	42	57	29	15	7	0	0	0	0	0	0	0	416
083008	S	0	0	0	0	0	14	32	29	20	8	8	7	13	17	19	15	7	0	0	0	0	0	0	0	189
083108	S	0	0	0	1	4	10	24	10	12	21	20	7	7	14	21	10	3	2	1	2	0	0	0	0	169
Month Total :		0	0	9	43	182	510	1020	715	549	421	296	270	328	432	469	431	239	38	10	8	4	3	2	0	5979
Percent :		0%	0%	0%	1%	3%	9%	17%	12%	9%	7%	5%	5%	5%	7%	8%	7%	4%	1%	0%	0%	0%	0%	0%	0%	
ADT :		0	0	0	1	6	16	33	23	18	14	10	9	11	14	15	14	8	1	0	0	0	0	0	0	193

	Sun	Mon	Tue	Wed	Thu	Fri	Sat
DW Totals :	761	644	610	617	955	1567	825
# Days :	5.0	4.0	4.0	4.0	4.0	5.0	5.0
ADT :	152	161	153	154	239	313	165
Percent :	13%	11%	10%	10%	16%	26%	14%

	Total	Percent
Weekday (Mon-Fri) :	4393	73%
ADT :	209	
Weekend (Sat-Sun) :	1586	27%
ADT :	159	

Date	DW	0000	0100	0200	0300	0400	0500	0600	0700	0800	0900	1000	1100	1200	1300	1400	1500	1600	1700	1800	1900	2000	2100	2200	2300	Total
090108	M	0	0	0	1	1	14	23	18	12	2	8	4	6	11	28	19	2	0	0	0	0	0	0	0	149
090208	T	0	0	0	1	5	17	30	7	12	8	10	7	11	11	11	3	9	0	0	0	0	0	0	0	142
090308	W	0	0	0	0	0	19	32	17	6	9	19	11	9	17	14	12	2	0	0	0	0	0	0	0	167
090408	T	0	0	0	1	1	5	14	19	29	23	11	0	8	10	9	8	0	0	0	0	0	0	0	0	138
090508	F	0	0	0	0	4	10	29	36	30	39	53	17	26	29	20	4	2	2	0	0	0	0	0	0	301
090608	S	0	0	0	1	1	9	23	15	23	10	48	20	14	16	11	10	5	0	1	0	0	0	0	0	207
090708	S	0	0	0	0	0	10	18	19	10	8	10	9	21	17	20	16	1	0	0	0	0	0	0	0	159
090808	M	0	0	1	2	2	10	15	17	20	10	6	13	9	5	12	19	2	0	0	0	1	1	0	0	145
090908	T	0	0	0	0	0	15	29	20	13	12	7	6	19	22	19	10	2	0	0	0	0	0	0	0	174
091008	W	0	0	0	0	0	9	32	21	22	10	16	3	13	13	29	15	2	0	0	0	0	0	0	0	185
091108	T	0	0	0	0	1	12	43	25	36	31	17	50	18	34	11	10	5	0	0	0	0	0	0	0	293
091208	F	0	0	0	0	1	23	46	50	36	36	27	18	36	34	15	6	1	0	0	0	0	0	0	0	329
091308	S	0	0	0	1	1	22	34	16	12	9	5	12	13	15	27	21	0	0	0	0	0	0	0	0	188
091408	S	0	0	0	0	0	10	30	13	10	14	11	5	8	20	19	20	1	0	1	0	0	0	0	0	162
091508	M	0	0	0	1	2	9	29	18	15	10	9	16	8	10	18	13	0	0	0	0	0	0	0	0	158
091608	T	0	0	0	0	0	10	24	26	9	5	9	9	18	11	16	10	0	0	0	0	0	0	0	0	147
091708	W	0	0	0	1	3	24	29	28	11	19	14	12	15	21	12	5	0	0	0	0	0	0	0	0	194
091808	T	0	0	0	0	3	18	29	34	37	21	24	29	17	15	22	9	3	0	0	0	0	0	0	0	261
091908	F	0	0	0	0	2	11	26	20	23	24	16	18	29	39	42	14	1	0	0	0	0	0	0	0	265
092008	S	0	0	1	1	2	9	29	18	13	22	10	11	8	21	23	11	2	0	0	0	0	0	0	0	181
092108	S	0	0	0	2	2	20	40	13	8	17	24	12	10	21	34	19	0	0	0	0	0	0	0	0	222
092208	M	0	0	0	0	2	10	30	27	14	13	4	7	7	7	21	8	0	0	0	0	0	0	0	0	150
092308	T	0	0	0	0	2	11	18	27	16	4	8	11	10	14	27	12	0	0	0	0	0	0	0	0	160
092408	W	0	0	0	2	5	15	33	34	18	7	8	6	5	3	7	5	0	0	0	0	0	0	0	0	148
092508	T	0	1	0	3	1	17	48	38	29	39	14	18	16	28	18	12	0	0	0	0	0	0	0	0	282
092608	F	0	0	0	0	1	29	39	32	36	27	17	38	23	24	27	8	0	0	0	0	0	0	0	0	301
092708	S	0	0	0	0	0	14	34	27	29	7	4	12	7	11	17	4	0	0	0	0	0	1	0	0	167
092808	S	0	0	0	0	2	19	29	40	12	7	8	6	8	14	13	5	0	0	0	0	0	0	0	0	163
092908	M	0	0	0	0	1	16	30	18	11	10	14	7	9	12	17	8	1	0	0	0	0	0	0	0	154
093008	T	0	0	0	0	0	9	11	16	14	15	12	24	17	12	14	1	0	0	0	0	0	0	0	0	145
Month Total :		0	1	2	17	45	426	876	709	566	468	443	411	418	517	573	317	41	2	2	0	1	2	0	0	5837
Percent :		0%	0%	0%	0%	1%	7%	15%	12%	10%	8%	8%	7%	7%	9%	10%	5%	1%	0%	0%	0%	0%	0%	0%	0%	
ADT :		0	0	0	1	2	14	29	24	19	16	15	14	14	17	19	11	1	0	0	0	0	0	0	0	196

	Sun	Mon	Tue	Wed	Thu	Fri	Sat
DW Totals :	706	756	768	694	974	1196	743
# Days :	4.0	5.0	5.0	4.0	4.0	4.0	4.0
ADT :	177	151	154	174	244	299	186
Percent :	12%	13%	13%	12%	17%	20%	13%

	Total	Percent
Weekday (Mon-Fri) :	4388	75%
ADT :	199	
Weekend (Sat-Sun) :	1449	25%
ADT :	181	

Date	DW	0000	0100	0200	0300	0400	0500	0600	0700	0800	0900	1000	1100	1200	1300	1400	1500	1600	1700	1800	1900	2000	2100	2200	2300	Total
100108	W	0	0	0	0	0	16	21	26	23	20	12	9	11	14	15	5	0	0	0	0	0	0	0	0	172
100208	T	0	0	0	1	7	17	28	37	52	29	32	29	41	24	25	5	3	0	0	0	0	0	0	0	330
100308	F	0	0	0	0	2	8	34	14	12	14	12	9	4	3	4	1	0	0	0	0	0	0	0	0	117
100408	S	0	0	0	0	1	11	21	24	31	17	6	10	7	7	9	1	0	0	0	0	0	0	0	0	145
100508	S	0	0	0	0	3	12	39	29	12	17	19	8	14	15	17	1	0	0	0	0	0	0	0	0	186
100608	M	0	0	0	0	1	2	14	9	3	14	42	11	7	30	22	23	9	0	0	0	0	0	0	0	187
100708	T	0	0	0	0	3	8	17	20	20	23	10	19	12	15	17	5	0	0	0	0	0	0	0	0	169
100808	W	0	0	0	3	3	4	18	12	9	18	8	5	9	9	14	10	0	0	0	0	0	0	0	0	122
100908	T	0	0	0	0	9	16	37	22	38	37	25	46	32	33	28	1	0	0	0	0	0	0	0	0	324
101008	F	0	0	0	2	1	6	31	34	32	24	45	50	35	42	48	13	0	0	0	0	0	0	0	0	363
101108	S	0	0	0	1	0	1	11	18	19	9	13	10	15	19	23	5	0	0	0	0	0	0	0	0	144
101208	S	0	0	0	0	2	9	16	19	11	13	12	8	14	15	18	6	0	0	0	0	0	0	0	0	143
101308	M	0	0	0	0	0	8	28	19	6	14	14	13	15	7	17	7	0	0	0	0	0	0	0	0	148
101408	T	0	0	0	0	5	5	23	10	21	11	29	9	23	14	22	7	0	0	0	0	0	0	0	0	179
101508	W	0	0	0	0	0	5	17	20	24	17	9	16	10	14	17	3	0	0	0	0	0	0	0	0	152
101608	T	0	0	0	0	0	21	29	43	34	48	35	34	17	29	25	8	0	0	0	0	0	0	0	0	323
101708	F	0	0	0	3	0	8	31	41	36	43	30	47	62	66	27	3	0	0	0	0	0	0	0	0	397
101808	S	0	0	0	0	0	4	17	23	25	17	6	9	5	2	8	1	0	0	0	2	3	0	0	0	122
101908	S	0	0	0	0	0	7	25	9	9	3	5	3	2	15	15	1	0	0	0	0	0	0	0	0	94
102008	M	0	0	0	0	0	11	12	9	1	6	2	0	3	14	2	2	0	3	2	0	0	0	0	0	67
102108	T	0	0	0	1	2	7	5	11	32	29	21	18	11	8	20	3	0	0	0	0	0	0	0	0	168
102208	W	0	0	0	0	0	3	9	23	27	21	14	31	19	11	7	4	0	0	0	0	0	0	0	0	169
102308	T	0	0	0	0	0	8	8	20	35	45	36	35	50	31	20	16	0	0	0	0	0	0	0	0	304
102408	F	0	0	0	0	2	6	37	20	22	47	32	44	33	41	8	2	0	0	0	0	0	0	0	0	294
102508	S	0	0	0	0	0	4	22	17	15	15	16	20	20	9	19	2	0	0	0	0	0	0	0	0	159
102608	S	0	0	0	0	1	8	23	18	9	16	11	16	18	17	24	8	0	0	0	0	0	0	0	0	169
102708	M	0	0	0	0	0	1	28	11	3	8	7	29	13	7	8	6	0	0	0	0	0	0	0	0	121
102808	T	0	0	0	1	0	4	15	15	2	8	6	15	12	9	13	2	0	0	0	0	0	0	0	0	102
102908	W	0	0	0	0	0	6	24	11	7	12	11	10	14	12	11	1	0	0	0	0	0	0	0	0	119
103008	T	0	0	0	0	2	9	12	13	13	30	11	10	14	16	10	0	0	0	0	0	0	0	0	0	140
103108	F	0	0	0	0	0	7	13	16	22	17	14	22	10	9	5	2	0	0	0	0	0	0	0	0	137
Month Total :		0	0	0	12	44	242	665	613	605	642	545	595	552	557	518	154	12	3	2	2	3	0	0	0	5766
Percent :		0%	0%	0%	0%	1%	4%	12%	11%	10%	11%	9%	10%	10%	10%	9%	3%	0%	0%	0%	0%	0%	0%	0%	0%	
ADT :		0	0	0	0	1	8	21	20	20	21	18	19	18	18	17	5	0	0	0	0	0	0	0	0	186

	Sun	Mon	Tue	Wed	Thu	Fri	Sat
DW Totals :	592	523	618	734	1421	1308	570
# Days :	4.0	4.0	4.0	5.0	5.0	5.0	4.0
ADT :	148	131	155	147	284	262	143
Percent :	10%	9%	11%	13%	25%	23%	10%

	Total	Percent
Weekday (Mon-Fri) :	4604	80%
ADT :	200	
Weekend (Sat-Sun) :	1162	20%
ADT :	145	

Date	DW	0000	0100	0200	0300	0400	0500	0600	0700	0800	0900	1000	1100	1200	1300	1400	1500	1600	1700	1800	1900	2000	2100	2200	2300	Total
110108	S	0	0	0	0	0	3	8	14	9	10	5	3	2	5	1	1	0	0	0	0	0	0	0	0	61
110208	S	0	0	0	0	0	4	16	12	2	3	8	8	8	16	11	1	0	0	0	0	0	0	0	0	89
110308	M	0	0	0	0	0	9	29	5	3	20	8	17	7	10	12	7	0	0	0	0	0	0	0	0	127
110408	T	0	0	1	1	0	5	14	12	23	22	11	11	7	11	12	0	0	0	0	0	0	0	0	0	130
110508	W	0	0	0	0	0	6	19	17	14	17	9	7	11	10	5	0	0	0	0	0	0	0	0	0	115
110608	T	0	0	0	0	0	5	16	11	16	15	12	1	0	8	1	0	0	0	0	0	0	0	0	0	85
110708	F	0	0	0	0	0	5	18	5	37	15	10	14	13	5	1	1	0	0	0	0	0	0	1	0	125
110808	S	0	0	0	0	0	3	14	15	7	10	4	3	1	5	1	0	0	0	0	0	0	0	0	0	63
110908	S	0	0	0	0	0	2	0	0	0	2	0	2	0	0	0	0	0	0	0	0	0	0	0	0	6
111008	M	0	0	0	0	0	4	8	4	2	4	1	0	3	10	7	0	0	0	0	0	0	0	0	0	43
111108	T	0	0	0	0	0	0	1	1	5	2	5	4	0	3	2	1	0	0	0	0	0	0	0	0	24
111208	W	0	0	0	0	0	4	9	4	10	7	15	11	11	7	7	1	0	0	0	0	0	0	0	0	86
111308	T	0	0	0	0	0	6	19	18	10	15	15	19	29	16	21	2	0	0	0	0	0	0	0	0	170
111408	F	0	0	0	0	0	3	14	10	14	19	30	17	20	39	8	2	0	1	0	0	0	0	0	0	177
111508	S	0	0	0	0	1	5	19	12	12	10	6	2	5	3	3	1	0	0	0	0	0	0	0	0	79
111608	S	0	0	0	0	0	5	3	4	7	15	17	11	15	9	8	2	2	0	0	0	0	0	0	0	98
111708	M	0	0	0	0	0	5	41	7	9	33	9	17	22	3	2	0	0	0	0	0	0	0	0	0	148
111808	T	0	0	0	0	0	0	4	2	1	9	1	1	0	1	5	7	0	0	0	0	1	1	0	0	33
111908	W	0	0	0	0	0	0	14	9	8	14	11	17	20	15	0	3	0	0	0	0	0	0	0	0	111
112008	T	0	0	0	0	0	1	4	8	17	31	26	21	21	26	9	5	0	0	0	0	0	0	0	0	169
112108	F	0	0	0	0	1	4	5	11	8	20	20	54	67	33	29	2	0	0	0	0	0	0	0	0	254
112208	S	0	0	0	0	2	3	6	21	6	36	33	51	34	26	44	10	0	0	0	0	0	0	0	0	272
112308	S	0	0	0	0	0	5	7	4	4	7	52	27	53	42	20	7	1	0	0	0	0	0	0	0	229
112408	M	0	0	0	0	0	5	13	14	11	22	50	35	42	35	42	6	0	0	0	0	0	0	0	0	275
112508	T	0	0	0	0	0	2	23	17	29	35	60	77	112	54	26	7	0	0	0	0	0	0	0	0	442
112608	W	0	0	0	0	0	8	16	18	29	39	51	25	32	53	20	3	0	0	0	0	0	0	0	0	294
112708	T	0	0	0	1	1	5	27	26	15	26	29	38	20	12	9	1	0	0	0	0	0	0	0	0	210
112808	F	0	0	0	0	0	6	30	27	22	20	26	11	4	11	14	4	0	0	0	0	0	0	0	0	175
112908	S	0	0	0	0	0	4	13	6	35	9	21	7	16	19	4	5	0	0	0	0	0	0	0	0	139
113008	S	0	0	0	0	0	16	22	8	7	16	7	17	10	17	26	4	0	0	0	0	0	0	0	0	150
Month Total :		0	0	1	2	5	133	432	322	372	503	552	528	585	504	350	83	3	1	0	0	1	1	1	0	4379
Percent :		0%	0%	0%	0%	0%	3%	10%	7%	8%	11%	13%	12%	13%	12%	8%	2%	0%	0%	0%	0%	0%	0%	0%	0%	
ADT :		0	0	0	0	0	4	14	11	12	17	18	18	20	17	12	3	0	0	0	0	0	0	0	0	146

	Sun	Mon	Tue	Wed	Thu	Fri	Sat
DW Totals :	572	593	629	606	634	731	614
# Days :	5.0	4.0	4.0	4.0	4.0	4.0	5.0
ADT :	114	148	157	152	159	183	123
Percent :	13%	14%	14%	14%	14%	17%	14%

	Total	Percent
Weekday (Mon-Fri) :	3193	73%
ADT :	160	
Weekend (Sat-Sun) :	1186	27%
ADT :	119	

Date	DW	0000	0100	0200	0300	0400	0500	0600	0700	0800	0900	1000	1100	1200	1300	1400	1500	1600	1700	1800	1900	2000	2100	2200	2300	Total
120108	M	0	0	0	0	0	3	28	15	18	13	22	12	28	20	21	17	0	0	0	0	0	0	0	0	197
120208	T	0	0	0	0	0	6	10	12	11	17	23	19	26	26	34	7	1	0	0	0	0	0	0	0	192
120308	W	0	0	0	0	0	1	25	11	19	20	14	13	12	7	7	5	0	0	1	0	0	0	0	0	135
120408	T	0	0	0	2	1	13	24	23	40	31	47	46	66	38	16	1	1	0	0	0	1	0	0	0	350
120508	F	0	0	0	0	1	6	16	11	30	34	48	43	55	41	33	3	0	0	0	0	0	0	0	0	321
120608	S	0	0	0	2	0	5	10	11	14	14	22	18	31	38	14	10	0	0	0	0	0	0	0	0	189
120708	S	0	0	0	0	0	3	6	11	20	13	19	13	13	31	20	12	0	0	0	0	0	0	0	0	161
120808	M	0	0	0	2	0	8	18	22	19	22	19	20	19	17	28	4	0	0	0	0	0	0	0	0	198
1/15/09 120908	T	0	0	0	0	0	8	27	15	45	22															117
Month Total :		0	0	0	6	2	53	164	131	216	186	214	184	250	218	173	59	2	0	1	0	1	0	0	0	1860
Percent :		0%	0%	0%	0%	0%	3%	9%	7%	12%	10%	12%	10%	13%	12%	9%	3%	0%	0%	0%	0%	0%	0%	0%	0%	
ADT :		0	0	0	1	0	6	18	15	24	21	27	23	31	27	22	7	0	0	0	0	0	0	0	0	222

OFF BY 39 DAYS

	Sun	Mon	Tue	Wed	Thu	Fri	Sat
DW Totals :	161	395	309	135	350	321	189
# Days :	1.0	2.0	1.4	1.0	1.0	1.0	1.0
ADT :	161	198	218	135	350	321	189
Percent :	9%	21%	17%	7%	19%	17%	10%

	Total	Percent
Weekday (Mon-Fri) :	1510	81%
ADT :	235	
Weekend (Sat-Sun) :	350	19%
ADT :	175	

Basic Volume Summary: TTC#10250138

Grand Total For Data From: 11:00 - 04/01/2008 To: 21:59 - 12/31/2008

Total Count	0000	0100	0200	0300	0400	0500	0600	0700	0800	0900	1000	1100	1200	1300	1400	1500	1600	1700	1800	1900	2000	2100	2200	2300	Total
Lane #1	1	2	45	456	1423	3535	7005	5131	4211	3963	3244	3414	3522	3356	3888	3517	2393	1459	156	83	34	15	5	1	50859
TOTAL	1	2	45	456	1423	3535	7005	5131	4211	3963	3244	3414	3522	3356	3888	3517	2393	1459	156	83	34	15	5	1	50859

Percents:	0000	0100	0200	0300	0400	0500	0600	0700	0800	0900	1000	1100	1200	1300	1400	1500	1600	1700	1800	1900	2000	2100	2200	2300
Lane #1	0%	0%	0%	1%	3%	7%	14%	10%	8%	8%	6%	7%	7%	7%	8%	7%	5%	3%	0%	0%	0%	0%	0%	0%
TOTAL	0%	0%	0%	1%	3%	7%	14%	10%	8%	8%	6%	7%	7%	7%	8%	7%	5%	3%	0%	0%	0%	0%	0%	0%

ADT:	0000	0100	0200	0300	0400	0500	0600	0700	0800	0900	1000	1100	1200	1300	1400	1500	1600	1700	1800	1900	2000	2100	2200	2300	Total
Lane #1	0	0	0	2	6	14	28	20	17	16	13	14	14	13	15	14	9	6	1	0	0	0	0	0	202
TOTAL	0	0	0	2	6	14	28	20	17	16	13	14	14	13	15	14	9	6	1	0	0	0	0	0	202

LANE #1

	Sun	Mon	Tue	Wed	Thu	Fri	Sat
DW Totals :	5510	5571	5651	6816	9910	11332	6069
# Days :	36.0	36.0	36.0	36.0	36.0	36.0	36.0
ADT :	153	155	157	189	275	315	169
Percent :	11%	11%	11%	13%	19%	22%	12%

	Total	Percent
Weekday (Mon-Fri) :	39280	77%
ADT :	218	
Weekend (Sat-Sun) :	11579	23%
ADT :	161	

ALL LANES

	Sun	Mon	Tue	Wed	Thu	Fri	Sat
DW Totals :	5510	5571	5651	6816	9910	11332	6069
# Days :	36.0	36.0	36.0	36.0	36.0	36.0	36.0
ADT :	153	155	157	189	275	315	169
Percent :	11%	11%	11%	13%	19%	22%	12%

	Total	Percent
Weekday (Mon-Fri) :	39280	77%
ADT :	218	
Weekend (Sat-Sun) :	11579	23%
ADT :	161	

APPENDIX B

SIGHT DISTANCE CALCULATION

Metric					US Customary				
Design speed (km/h)	Brake reaction distance (m)	Braking distance on level (m)	Stopping sight distance Calculated (m)	Stopping sight distance Design (m)	Design speed (mph)	Brake reaction distance (ft)	Braking distance on level (ft)	Stopping sight distance Calculated (ft)	Stopping sight distance Design (ft)
20	13.9	4.6	18.5	20	15	55.1	21.6	76.7	80
30	20.9	10.3	31.2	35	20	73.5	38.4	111.9	115
40	27.8	18.4	46.2	50	25	91.9	60.0	151.9	155
50	34.8	28.7	63.5	65	30	110.3	86.4	196.7	200
60	41.7	41.3	83.0	85	35	128.6	117.6	246.2	250
70	48.7	56.2	104.9	105	40	147.0	153.6	300.6	305
80	55.6	73.4	129.0	130	45	165.4	194.4	359.8	360
90	62.6	92.9	155.5	160	50	183.8	240.0	423.8	425
100	69.5	114.7	184.2	185	55	202.1	290.3	492.4	495
110	76.5	138.8	215.3	220	60	220.5	345.5	566.0	570
120	83.4	165.2	248.6	250	65	238.9	405.5	644.4	645
130	90.4	193.8	284.2	285	70	257.3	470.3	727.6	730
					75	275.6	539.9	815.5	820
					80	294.0	614.3	908.3	910

Note: Brake reaction distance predicated on a time of 2.5 s; deceleration rate of 3.4 m/s^2 [11.2 ft/s^2] used to determine calculated sight distance.

Exhibit 3-1. Stopping Sight Distance

Metric							US Customary						
Design speed (km/h)	Stopping sight distance (m)						Design speed (mph)	Stopping sight distance (ft)					
	Downgrades			Upgrades				Downgrades			Upgrades		
	3%	6%	9%	3%	6%	9%		3%	6%	9%	3%	6%	9%
20	20	20	20	19	18	18	15	80	82	85	75	74	73
30	32	35	35	31	30	29	20	116	120	126	109	107	104
40	50	50	53	45	44	43	25	158	165	173	147	143	140
50	66	70	74	61	59	58	30	205	215	227	200	184	179
60	87	92	97	80	77	75	35	257	271	287	237	229	222
70	110	116	124	100	97	93	40	315	333	354	289	278	269
80	136	144	154	123	118	114	45	378	400	427	344	331	320
90	164	174	187	148	141	136	50	446	474	507	405	388	375
100	194	207	223	174	167	160	55	520	553	593	469	450	433
110	227	243	262	203	194	186	60	598	638	686	538	515	495
120	263	281	304	234	223	214	65	682	728	785	612	584	561
130	302	323	350	267	254	243	70	771	825	891	690	658	631
							75	866	927	1003	772	736	704
							80	965	1035	1121	859	817	782

Exhibit 3-2. Stopping Sight Distance on Grades

Decision Sight Distance

Stopping sight distances are usually sufficient to allow reasonably competent and alert drivers to come to a hurried stop under ordinary circumstances. However, these distances are often inadequate when drivers must make complex or instantaneous decisions, when information is difficult to perceive or when unexpected or unusual maneuvers are required. Limiting sight distances to those needed for stopping may preclude drivers from performing evasive maneuvers, which often involve less risk and are otherwise preferable to stopping. Even with an appropriate complement of standard traffic control devices in accordance with the MUTCD (**6**), stopping sight distances may not provide sufficient visibility distances for drivers to corroborate advance warning and to perform the appropriate maneuvers. It is evident that there are many locations where it would be prudent to provide longer sight distances. In these circumstances, decision sight distance provides the greater visibility distance that drivers need.

Decision sight distance is the distance needed for a driver to detect an unexpected or otherwise difficult-to-perceive information source or condition in a roadway environment that may be visually cluttered, recognize the condition or its potential threat, select an appropriate speed and path, and initiate and complete the maneuver safely and efficiently (**7**). Because decision sight distance offers drivers additional margin for error and affords them sufficient length to maneuver their vehicles at the same or reduced speed, rather than to just stop, its values are substantially greater than stopping sight distance.

Drivers need decision sight distances whenever there is a likelihood for error in either information reception, decision-making, or control actions (**8**). Examples of critical locations where these kinds of errors are likely to occur, and where it is desirable to provide decision sight distance include interchange and intersection locations where unusual or unexpected maneuvers are required, changes in cross section such as toll plazas and lane drops, and areas of concentrated

APPENDIX C

CONCEPTUAL SITE DRAWINGS

C1: AT-GRADE CROSSING
C2: OVERPASS CROSSING
C3: UNDERPASS CROSSING ROAD 39 AT ELEVATED GRADE
C4: UNDERPASS CROSSING – ALTERNATE LOCATION
C5: UNDERPASS CROSSING-ROAD 39 AT DESIGNED GRADE

APPENDIX C1

AT-GRADE CROSSING

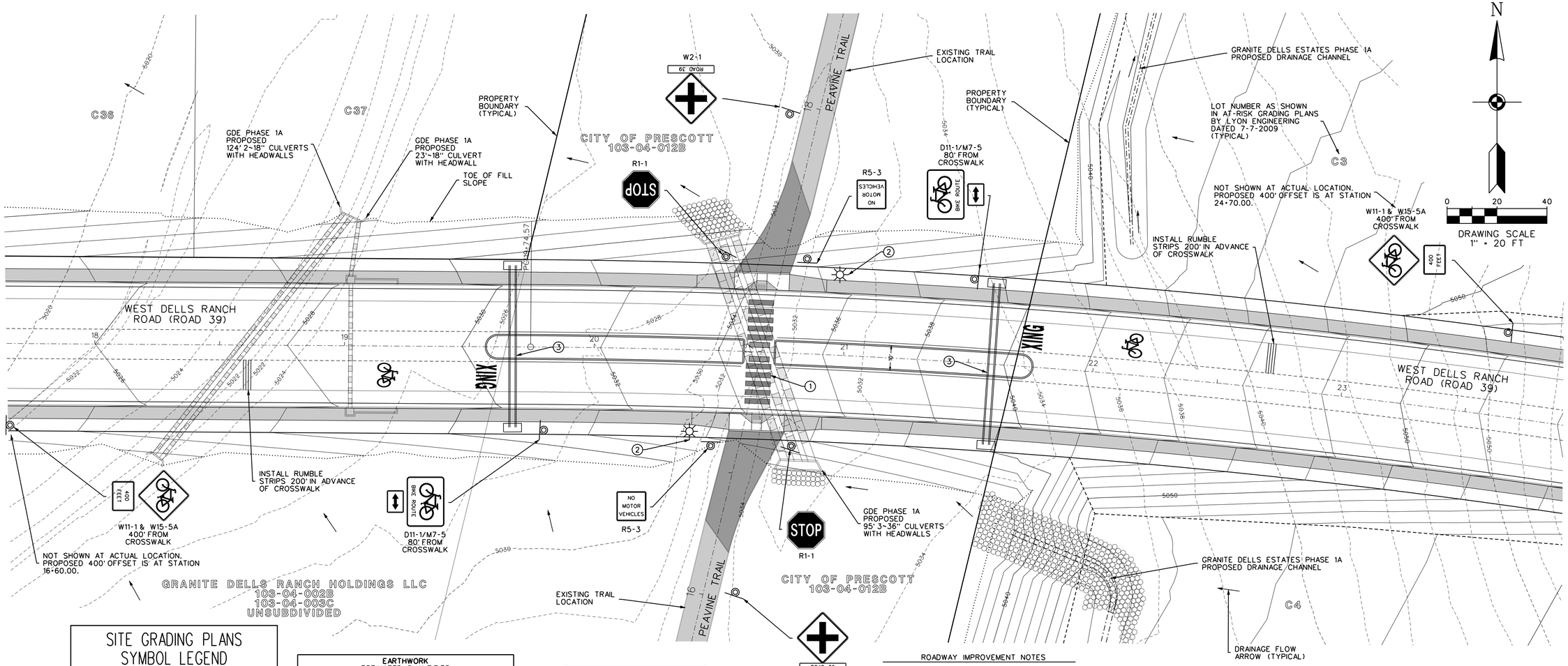

SITE GRADING PLANS SYMBOL LEGEND

5000	EXISTING 2' CONTOUR
5000	PROPOSED 2' CONTOUR
	TOP OF CUT SLOPE
	TOE OF FILL SLOPE
	ROAD CENTERLINE
	DRAINAGE FLOW LINE
	TOP OF BERM OR SHOULDER LINE
	LIMITS OF PAD GRADING
428	LOT NUMBER

EARTHWORK ESTIMATED QUANTITIES

(ALL VOLUMES ACCOUNT FOR A 6% SHRINK FACTOR AND A 2" GROUND LOSS. VOLUMES DO NOT INCLUDE SPOILS FROM UTILITY TRENCHES)

CUT (CY)	0
FILL (CY)	31
BALANCE (CY)	31

NOTES:

1. THE ENGINEER MAKES NO REPRESENTATION OR GUARANTEE REGARDING EARTHWORK QUANTITIES OR THAT THE EARTHWORK FOR THIS PROJECT WILL BALANCE DUE TO THE VARYING FIELD CONDITIONS, CHANGING SOIL TYPES, ALLOWABLE CONSTRUCTION TOLERANCES AND CONSTRUCTION METHODS THAT ARE BEYOND THE CONTROL OF THE ENGINEER.
2. PRIOR TO BIDDING THE WORK, THE CONTRACTOR SHALL THOROUGHLY SATISFY HIMSELF AS TO THE ACTUAL CONDITIONS, EARTHWORK QUANTITIES, AND REQUIREMENTS OF WORK AND EXCESS OR DEFICIENCY IN EARTHWORK QUANTITIES. IF ANY, NO CLAIM SHALL BE MADE AGAINST THE OWNER/DEVELOPER OR ENGINEER FOR ANY EXCESS OR DEFICIENCY THEREIN, ACTUAL OR RELATIVE.

SHEET INDEX MAP

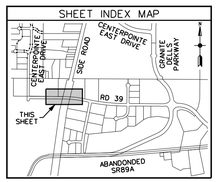

ROADWAY IMPROVEMENT NOTES

1. INSTALL RAISED CROSSWALK WITH 12' WIDE AREA WITH 2% CROSS SLOPE. ROAD TRANSITION, DRAINAGE, AND STRIPING DESIGN TO BE DETERMINED DURING FINAL DESIGN STAGE. CROSSING TO MEET ADA STANDARDS.
2. INSTALL STREET LIGHT PER CITY OF PRESCOTT REQUIREMENT
3. INSTALL LOCKABLE PULL BOX, CONDUIT, AND STUB FOR FUTURE LIGHTING REQUIREMENTS

NOTE:

SIGNAGE AND STRIPING LOCATIONS PER 2000 MUTCD FIGURE 9B-3

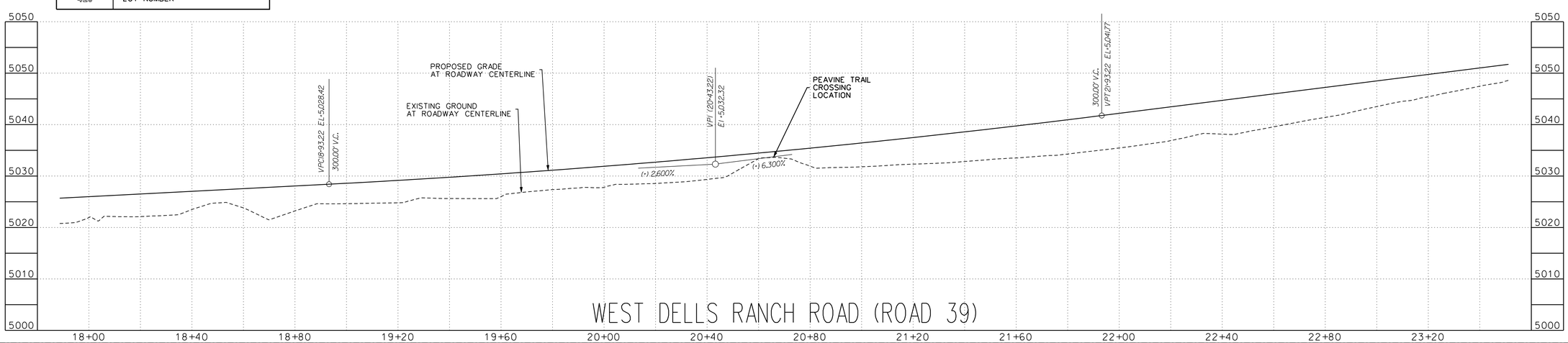

CALL TWO WORKING DAYS BEFORE YOU DIG
BLUESTAKE
DIAL 811

NO.	DATE	REVISIONS

LYON ENGINEERING
Civil Engineers • Land Surveyors
3623 CROSSINGS DRIVE
PRESCOTT, AZ 86305
(928) 776-1750

SHEET DESCRIPTION
AT GRADE CROSSING
ALTERNATE

PROJECT
CITY OF PRESCOTT
PEAVINE TRAIL/ROAD 39
CROSSING ANALYSIS

DRAWN: KDH
DESIGN: KDH
CHECKED: SAL
JOB NO.: 274-10

FOR EXHIBIT USE ONLY

SHEET NO.
1
OF 5 SHEETS

G:\Projects\274_City of Prescott\274-10 Peavine Crossing Analysis\CAD\DGN\PLANSET\PEAVINE SHEETS.dgn

APPENDIX C2

OVERPASS CROSSING

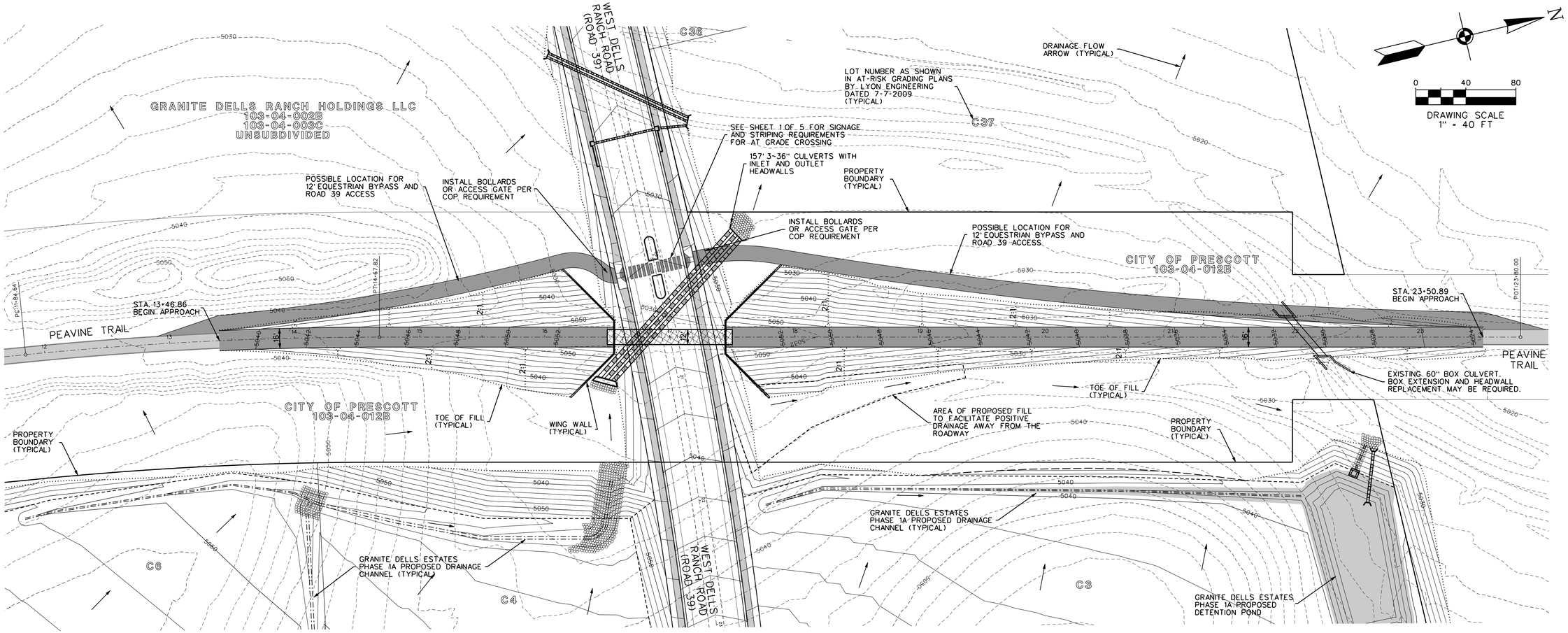

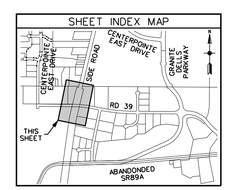

SITE GRADING PLANS SYMBOL LEGEND

5060	EXISTING 2' CONTOUR
5060	PROPOSED 2' CONTOUR
	TOP OF CUT SLOPE
	TOE OF FILL SLOPE
	ROAD CENTERLINE
	DRAINAGE FLOW LINE
	TOP OF BERM OR SHOULDER LINE
	LIMITS OF PAD GRADING
428	LOT NUMBER

EARTHWORK
ESTIMATED QUANTITIES
(ALL VOLUMES ACCOUNT FOR A 6% SHRINK FACTOR AND A 2" GROUND LOSS. VOLUMES DO NOT INCLUDE SPOILS FROM UTILITY TRENCHES)

CUT (CY)	0
FILL (CY)	14,900
BALANCE (CY)	14,900

NOTES:
1. THE ENGINEER MAKES NO REPRESENTATION OR GUARANTEE REGARDING EARTHWORK QUANTITIES OR THAT THE EARTHWORK FOR THIS PROJECT WILL BALANCE DUE TO THE VARYING FIELD CONDITIONS,CHANGING SOIL TYPES, ALLOWABLE CONSTRUCTION TOLERANCES AND CONSTRUCTION METHODS THAT ARE BEYOND THE CONTROL OF THE ENGINEER.
2. PRIOR TO BIDDING THE WORK,THE CONTRACTOR SHALL THOROUGHLY SATISFY HIMSELF AS TO THE ACTUAL CONDITIONS,EARTHWORK QUANTITIES,AND REQUIREMENTS OF WORK AND EXCESS OR DEFICIENCY IN EARTHWORK QUANTITIES. IF ANY,NO CLAIM SHALL BE MADE AGAINST THE OWNER/DEVELOPER OR ENGINEER FOR ANY EXCESS OR DEFICIENCY THEREIN,ACTUAL OR RELATIVE.

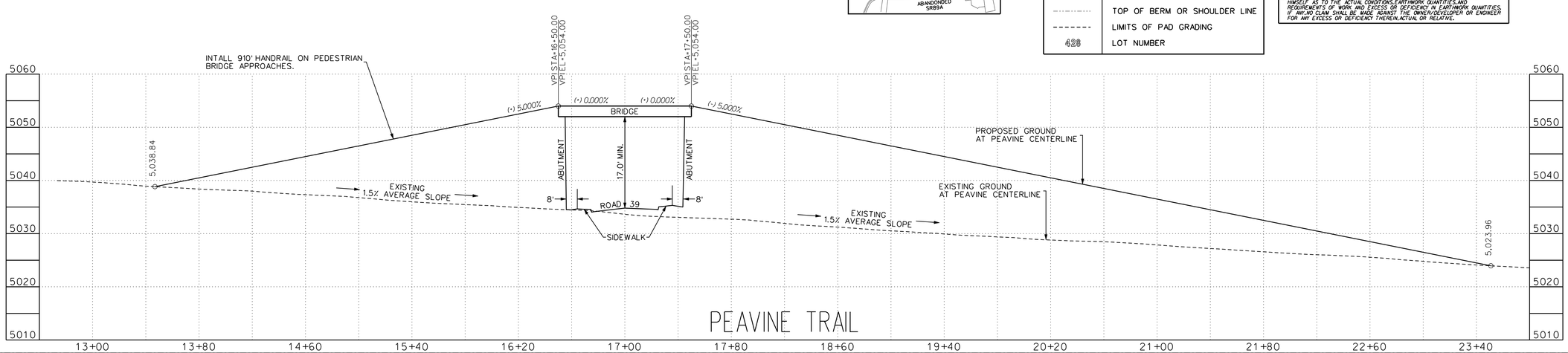

CALL TWO WORKING DAYS BEFORE YOU DIG
BLUESTAKE
DIAL 811

NO.	DATE	REVISIONS

LYON ENGINEERING
Civil Engineers • Land Surveyors
3623 CROSSINGS DRIVE
PRESCOTT, AZ 86305
(928) 776-1750

SHEET DESCRIPTION
TRAIL OVERPASS ALTERNATE

PROJECT
CITY OF PRESCOTT
PEAVINE TRAIL/ROAD 39 CROSSING ANALYSIS

DRAWN: KDH
DESIGN: KDH
CHECKED: SAL
JOB NO.: 274-10

FOR EXHIBIT USE ONLY

SHEET NO.
2
OF 5 SHEETS

G:\Projects\274_City of Prescott\274-10 Peavine Crossing Analysis\CADD\DGN\PLANSETS\PEAVINE-SHEETS.dgn

APPENDIX C3

UNDERPASS CROSSING ROAD 39 AT ELEVATED GRADE

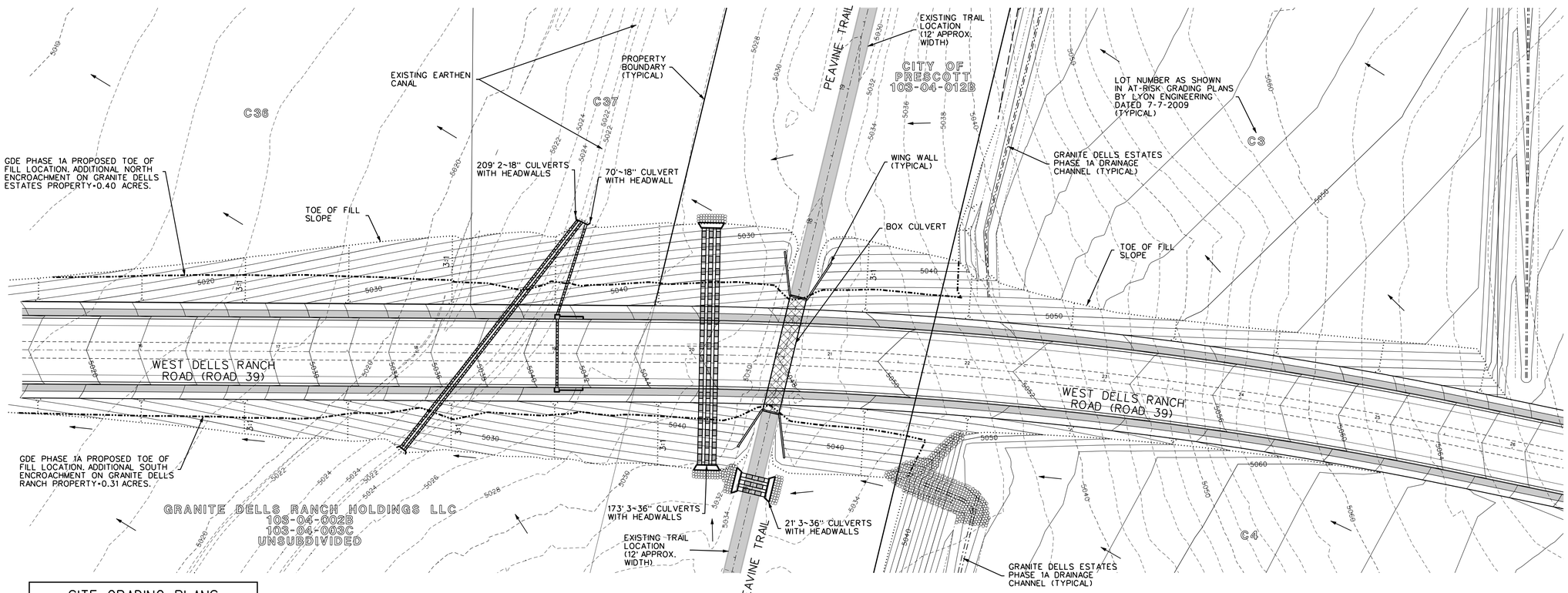

SITE GRADING PLANS SYMBOL LEGEND

- -5000- - -	EXISTING 2' CONTOUR
—5000—	PROPOSED 2' CONTOUR
— — — ·	TOP OF CUT SLOPE
.....	TOE OF FILL SLOPE
—·—·—·—	ROAD CENTERLINE
—··—··—	DRAINAGE FLOW LINE
·····—·····	TOP OF BERM OR SHOULDER LINE
- - - - - -	LIMITS OF PAD GRADING
428	LOT NUMBER

EARTHWORK
ESTIMATED QUANTITIES
(ALL VOLUMES ACCOUNT FOR A 6% SHRINK FACTOR AND A 2" GROUND LOSS. VOLUMES DO NOT INCLUDE SPOILS FROM UTILITY TRENCHES)

CUT (CY)	0
FILL (CY)	33,340
BALANCE (CY)	33,340 (3)

NOTES:
1. THE ENGINEER MAKES NO REPRESENTATION OR GUARANTEE REGARDING EARTHWORK QUANTITIES OR THAT THE EARTHWORK FOR THIS PROJECT WILL BALANCE DUE TO THE VARYING FIELD CONDITIONS,CHANGING SOIL TYPES, ALLOWABLE CONSTRUCTION TOLERANCES AND CONSTRUCTION METHODS THAT ARE BEYOND THE CONTROL OF THE ENGINEER.
2. PRIOR TO BIDDING THE WORK,THE CONTRACTOR SHALL THOROUGHLY SATISFY HIMSELF AS TO THE ACTUAL CONDITIONS,EARTHWORK QUANTITIES,AND REQUIREMENTS OF WORK AND EXCESS OR DEFICIENCY IN EARTHWORK QUANTITIES. IF ANY,NO CLAIM SHALL BE MADE AGAINST THE OWNER/DEVELOPER OR ENGINEER FOR ANY EXCESS OR DEFICIENCY THEREIN,ACTUAL OR RELATIVE.
3. 33,340 CUBIC YARDS OF ADDITIONAL FILL WILL BE NEEDED OVER WHAT IS REQUIRED TO BUILD ROAD 39 PER THE GRANITE DELLS ESTATES PHASE 1A GRADING PLANS.

NOTE:

NO ACCESS TO ROAD 39 IS PROPOSED IN THIS OPTION DUE TO THE GRADE DIFFERENTAL BETWEEN ROAD 39 AND THE PEAVINE TRAIL. THE ACCESS RAMPS WOULD BE HUNDREDS OF FEET LONG TO MEET ADA REQUIREMENTS.

ACCESS RAMPS TO THE PEAVINE WOULD REQUIRE A SUBSTANTIAL ADDITIONAL AMOUNT OF FILL MATERIAL, HANDRAILS, AND/OR RETAINING WALL TO AVOID CONFLICT WITH THE EXISTING TRAIL AND PROPOSED DRAINAGE STRUCTURES.

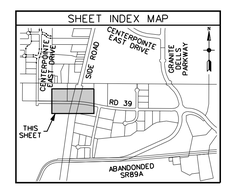

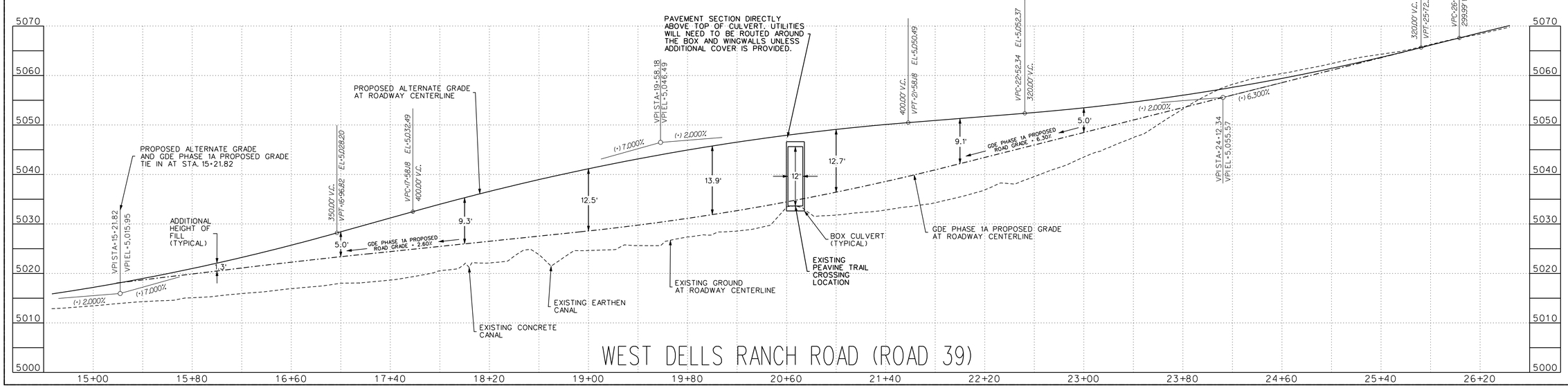

DIAL 811 — CALL TWO WORKING DAYS BEFORE YOU DIG

NO.	DATE	REVISIONS

LYON ENGINEERING
Civil Engineers • Land Surveyors
3623 CROSSINGS DRIVE
PRESCOTT, AZ 86305
(928) 776-1750

SHEET DESCRIPTION: ROAD 39 OVER PEAVINE BOX CULVERT

PROJECT: CITY OF PRESCOTT PEAVINE TRAIL/ROAD 39 CROSSING ANALYSIS

DRAWN: KDH
DESIGN: KDH
CHECKED: SAL
JOB NO.: 274-10

FOR EXHIBIT USE ONLY

SHEET NO. 3 OF 5 SHEETS

C:\Projects\274_City of Prescott\274-10 Peavine Crossing Analysis\CADD\DGN\PLANSET\PEAVINE-SHEETS.dgn

APPENDIX C4

UNDERPASS CROSSING – ALTERNATE LOCATION

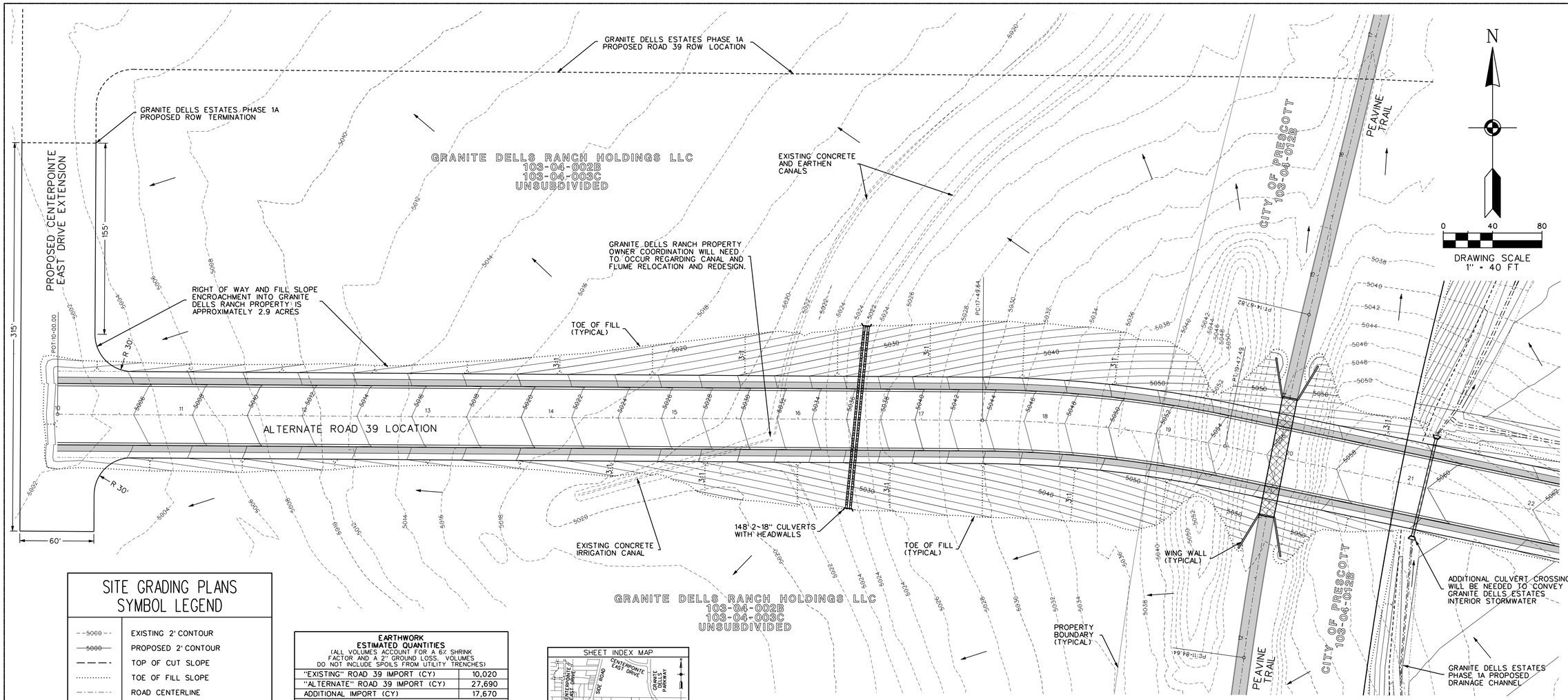

SITE GRADING PLANS SYMBOL LEGEND

5000	EXISTING 2' CONTOUR
5000	PROPOSED 2' CONTOUR
	TOP OF CUT SLOPE
	TOE OF FILL SLOPE
	ROAD CENTERLINE
	DRAINAGE FLOW LINE
	TOP OF BERM OR SHOULDER LINE
	LIMITS OF PAD GRADING
428	LOT NUMBER

EARTHWORK ESTIMATED QUANTITIES
(ALL VOLUMES ACCOUNT FOR A 6% SHRINK FACTOR AND A 2" GROUND LOSS. VOLUMES DO NOT INCLUDE SPOILS FROM UTILITY TRENCHES)

"EXISTING" ROAD 39 IMPORT (CY)	10,020
"ALTERNATE" ROAD 39 IMPORT (CY)	27,690
ADDITIONAL IMPORT (CY)	17,670

NOTES:
1. THE ENGINEER MAKES NO REPRESENTATION OR GUARANTEE REGARDING EARTHWORK QUANTITIES OR THAT THE EARTHWORK FOR THIS PROJECT WILL BALANCE DUE TO THE VARYING FIELD CONDITIONS, CHANGING SOIL TYPES, ALLOWABLE CONSTRUCTION TOLERANCES AND CONSTRUCTION METHODS THAT ARE BEYOND THE CONTROL OF THE ENGINEER.
2. PRIOR TO BIDDING THE WORK, THE CONTRACTOR SHALL THOROUGHLY SATISFY HIMSELF AS TO THE ACTUAL CONDITIONS, EARTHWORK QUANTITIES, AND REQUIREMENTS OF WORK AND EXCESS OR DEFICIENCY IN EARTHWORK QUANTITIES. IF ANY, NO CLAIM SHALL BE MADE AGAINST THE OWNER/DEVELOPER OR ENGINEER FOR ANY EXCESS OR DEFICIENCY THEREIN, ACTUAL OR RELATIVE.

SHEET INDEX MAP

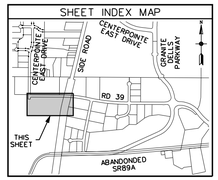

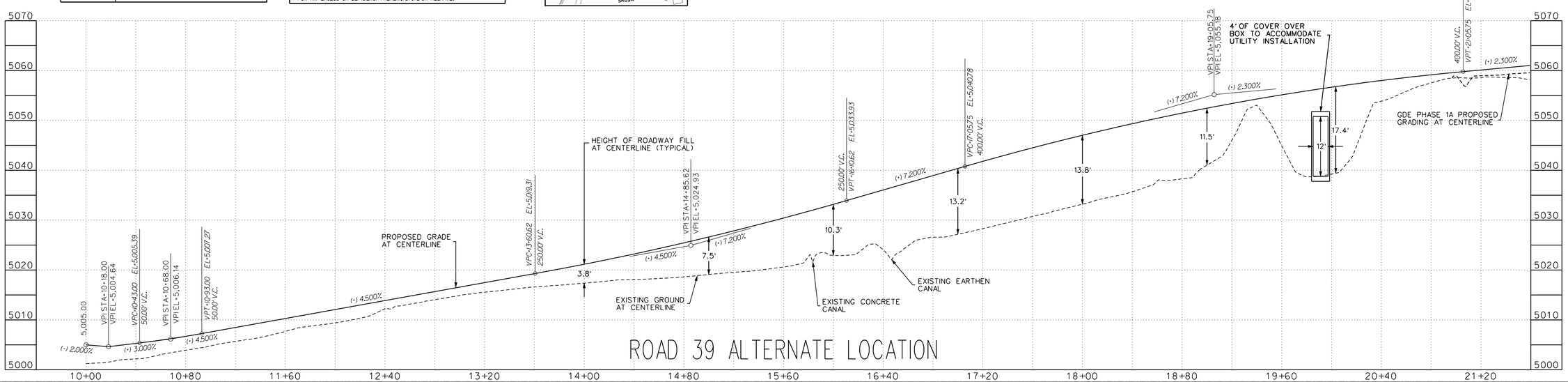

ROAD 39 ALTERNATE LOCATION

CALL TWO WORKING DAYS BEFORE YOU DIG
BLUESTAKE
DIAL 811

NO.	DATE	REVISIONS

LYON ENGINEERING
Civil Engineers • Land Surveyors
3623 CROSSINGS DRIVE
PRESCOTT, AZ 86305
(928) 776-1750

SHEET DESCRIPTION
ROAD 39 SOUTHERN LOCATION ALTERNATE

PROJECT
CITY OF PRESCOTT
PEAVINE TRAIL/ROAD 39
CROSSING ANALYSIS

DRAWN: KDH
DESIGN: KDH
CHECKED: SAL
JOB NO.: 274-10

FOR EXHIBIT USE ONLY

SHEET NO. 4 OF 5 SHEETS

G:\Projects\274_City of Prescott\274-10 Peavine Crossing Analysis\CADD\DGN\PL INSET\PEAVINE SHEETS.dgn

APPENDIX C5

UNDERPASS CROSSING-ROAD 39 AT DESIGNED GRADE

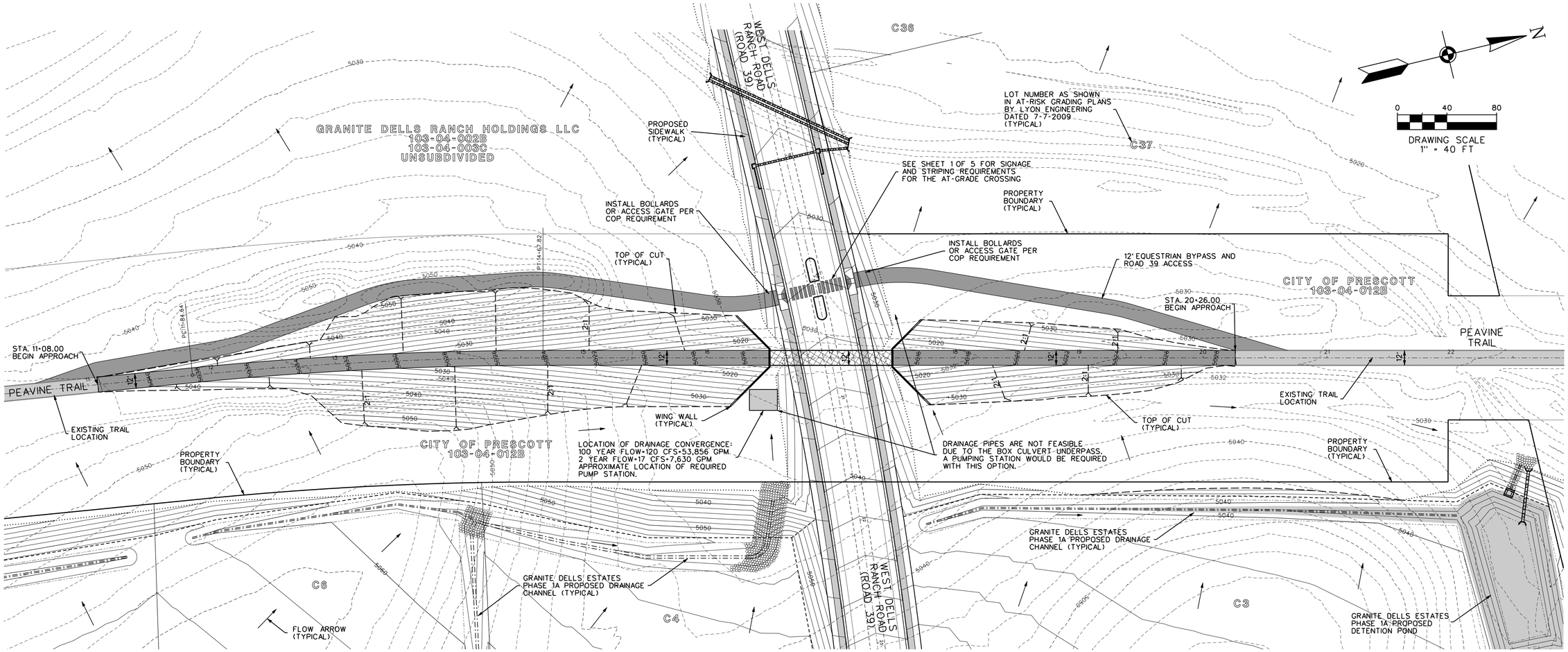

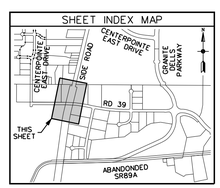

SITE GRADING PLANS SYMBOL LEGEND

5060	EXISTING 2' CONTOUR
5060	PROPOSED 2' CONTOUR
	TOP OF CUT SLOPE
	TOE OF FILL SLOPE
	ROAD CENTERLINE
	DRAINAGE FLOW LINE
	TOP OF BERM OR SHOULDER LINE
	LIMITS OF PAD GRADING
428	LOT NUMBER

EARTHWORK
ESTIMATED QUANTITIES
(ALL VOLUMES ACCOUNT FOR A 6% SHRINK FACTOR AND A 2" GROUND LOSS. VOLUMES DO NOT INCLUDE SPOILS FROM UTILITY TRENCHES)

CUT (CY)	11,320
FILL (CY)	0
BALANCE (CY)	11,320

NOTES:
1. THE ENGINEER MAKES NO REPRESENTATION OR GUARANTEE REGARDING EARTHWORK QUANTITIES OR THAT THE EARTHWORK FOR THIS PROJECT WILL BALANCE DUE TO THE VARYING FIELD CONDITIONS,CHANGING SOIL TYPES, ALLOWABLE CONSTRUCTION TOLERANCES AND CONSTRUCTION METHODS THAT ARE BEYOND THE CONTROL OF THE ENGINEER.
2. PRIOR TO BIDDING THE WORK,THE CONTRACTOR SHALL THOROUGHLY SATISFY HIMSELF AS TO THE ACTUAL CONDITIONS,EARTHWORK QUANTITIES,AND REQUIREMENTS OF WORK AND EXCESS OR DEFICIENCY IN EARTHWORK QUANTITIES. IF ANY,NO CLAIM SHALL BE MADE AGAINST THE OWNER/DEVELOPER OR ENGINEER FOR ANY EXCESS OR DEFICIENCY THEREIN,ACTUAL OR RELATIVE.

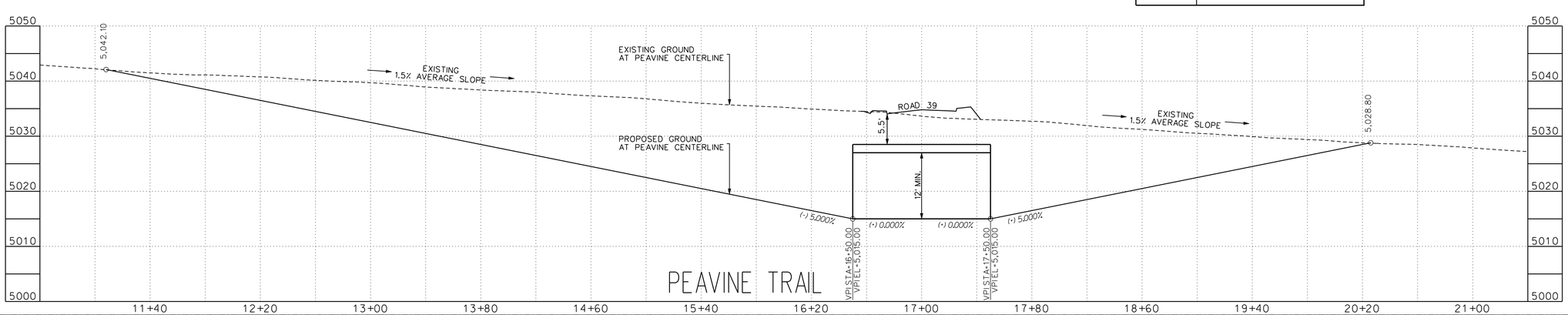

CALL TWO WORKING DAYS BEFORE YOU DIG
DIAL 811

NO.	DATE	REVISIONS

LYON ENGINEERING
Civil Engineers • Land Surveyors
3623 CROSSINGS DRIVE
PRESCOTT, AZ 86305
(928) 776-1750

SHEET DESCRIPTION
TRAIL UNDERPASS ALTERNATE

PROJECT
CITY OF PRESCOTT
PEAVINE TRAIL/ROAD 39 CROSSING ANALYSIS

DRAWN: KDH
DESIGN: KDH
CHECKED: SAL
JOB NO.: 274-10

FOR EXHIBIT USE ONLY

SHEET NO. 5 OF 5 SHEETS

G:\Projects\274_City of Prescott\274-10 Peavine Crossing Analysis\CADD\DGN\PLANSETS\PEAVINE SHEETS.dgn

APPENDIX D

WEIGHTED DECISION MATRIX

Peavine Trail Road 39 Crossing Weighted Decision Matrix

	Category Total Weight	Item Weight	At-Grade		Overpass		Underpass At-Grade		Alternate Location Underpass		Underpass-Below Grade		Score Range
			Option 1		Option 2		Option 3		Option 4		Option 5		
Safety	30		Score[1] (1-10)	Adjusted Weight[2]	Score[1] (1-10)	Adjusted Weight[2]	Score[1] (1-10)	Adjusted Weight[2]	Score[1] (1-10)	Adjusted Weight[2]	Score[1] (1-10)	Adjusted Weight[2]	1=Least Safe 10=Most Safe
Trail Users-Peavine		30	7	21	9	27	9	27	9	27	4	12	
Aesthetics	5												
Visual Impact		5	8	4	5	2.5	5	2.5	5	2.5	7	3.5	1=Least Aesthetic 10=Most Aesthetic
Usability and Convenience	30												
Pedestrian		10	7	7	8	8	9	9	9	9	2 *	2	1=Less Usable 10=Most Usable (Current Condition)
Equestrian		7	7	4.9	8	5.6	5	3.5	5	3.5	4 *	2.8	
Bicycle		10	8	8	5	5	9	9	9	9	2 *	2	
Maintenance Vehicle		3	10	3	8	2.4	8	2.4	8	2.4	2 *	0.6	
Cost	25		$46,225		$353,215		$383,906		$422,477		$597,811		
Materials and Installation		15	10	15	5	7.5	4	6	4	6	1	1.5	1=High Cost 10=Low Cost
Maintenance		4	10	4	8	3.2	6	2.4	6	2.4	1	0.4	
Energy Usage		2	9	1.8	9	1.8	7	1.4	7	1.4	4	0.8	
ROW Impact		4	10	4	10	4	2	0.8	1	0.4	10	4	
Adjacent Property Owner Impact	10												
Encroachment onto Property		5	10	5	10	5	3	1.5	1	0.5	10	5	1=High Impact 10=Low Impact
Usability/Access to Land		5	10	5	10	5	4	2	1	0.5	10	5	
Total	**100**			**82.7**		**77.0**		**67.5**		**64.6**		**39.6**	

(1) - Option's "score" is based on a 1-10 range
(2) - Option's "adjusted weight" is calculated by multiplying the "item weight" by the "score" divided by 10
(*) - Option 5 scores in this area are lower than Option 3 and 4 due to the possibility of standing water and muddy conditions following a rain or snow event

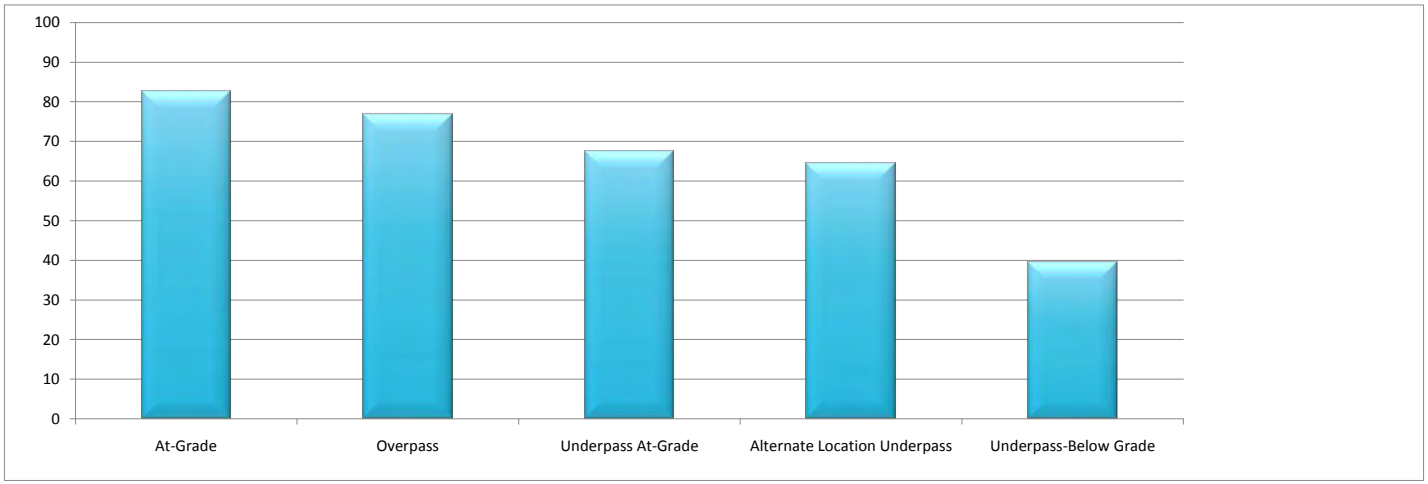

APPENDIX E

STRUCTURE SCHEMATICS

E1: OVERPASS CROSSING
E2: UNDERPASS CROSSING

APPENDIX E1

OVERPASS CROSSING

12550 W Butler Dr.
El Mirage, AZ 85335
PHONE (602) 206-2076
FAX (623) 935-6100
www.contechbridge.com

TO: Lyon Engineering
DATE: 8/4/09
PROJECT: Peavine Trail
RE: Pedestrian Truss Options

The following is a Continental Pedestrian Bridge System **Engineer's Cost Estimate**. This **Estimate** is intended for preliminary budgeting purposes only and should **not** be interpreted as a final quotation. The information presented is based on the most current data made available to CONTECH.

Items Included in This Proposal

- Vertical Pickets at 4" max to height of 54"
- Uniform Live Load of 85psf reduced
- Vehicular Live Load of 10,000 lbs
- Delivered in 1 section
- Galvanized Hand Rail
- Toe Plates, Setting Pads and Teflon Slip Pads
- Delivered in 2 sections

Truss Bridge Options *Contractor to unload, set, and bolt structure together.*

100' x 12' Continental Connector Truss Bridge:	***$69,500 - $86,900***
100' x 12' Continental Link Truss Bridge:	***$72,700 - $89,900***
100' x 12' Continental Keystone Truss Bridge:	***$75,400 - $96,800***
Estimated Installation:	***$40,000 - $55,000****

NOTES

- Bridge prices range from the least expensive option (Weathering Steel finish and concrete deck) to the most expensive option (Painted finish and wood deck), but encompass the different combinations of finish and decking in between.
- Installation estimate includes initial excavation, pouring the concrete abutments, lifting and setting the bridge, and finishing the deck. Installation estimate does not include any work outside of the bridge limits (i.e. approach slabs, reinforced earth work, etc.)

**Price range based on abutment heights ranging between 5' and 12'.*

12550 W Butler Dr.
El Mirage, AZ 85335
PHONE (602) 206-2076
FAX (623) 935-6100
www.contechbridge.com

Respectfully submitted,

Tara Anderson
Project Consultant

Connector

Connector

Link

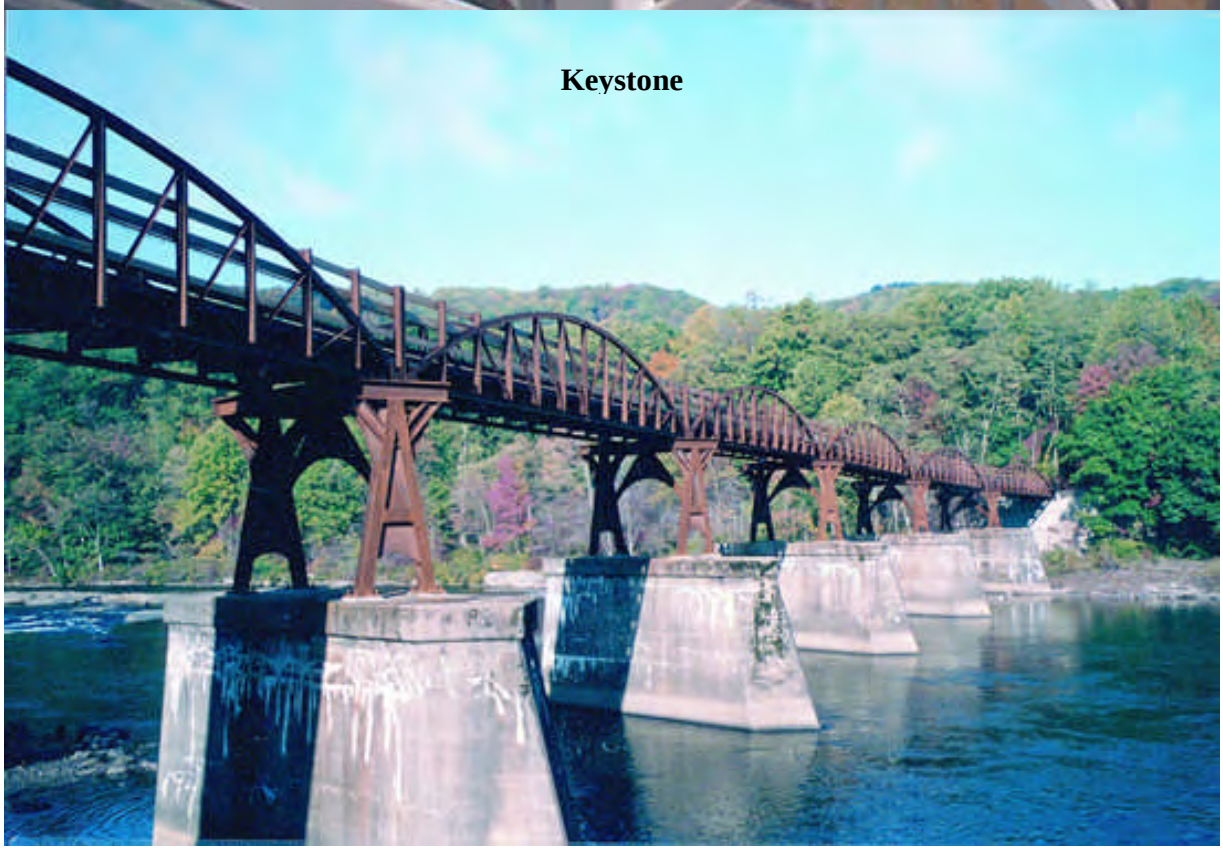
Keystone

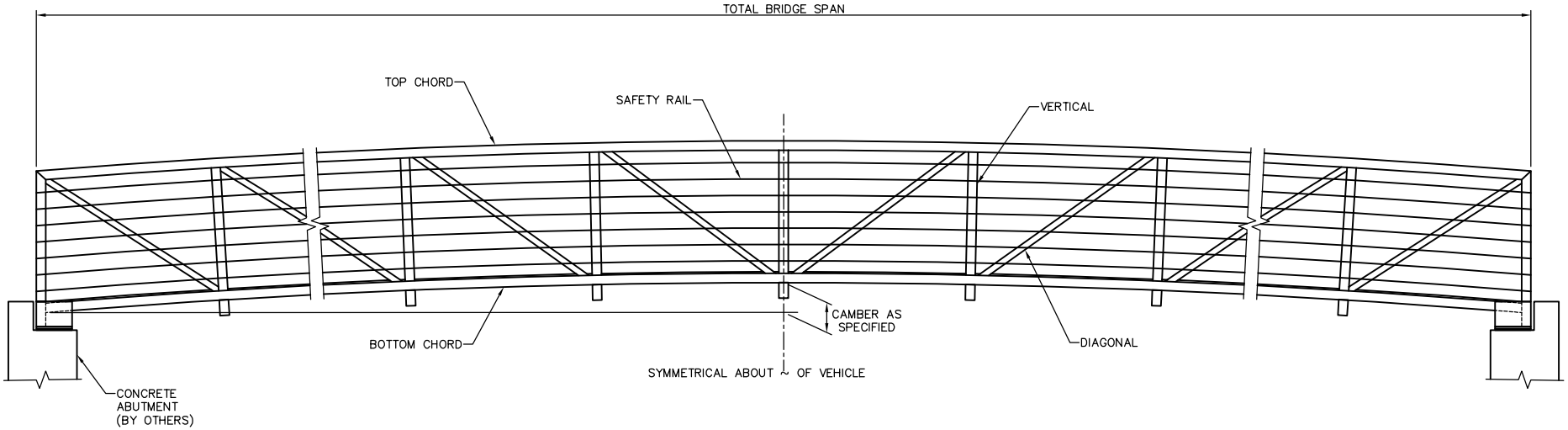

CONTECH BRIDGE SOLUTIONS INC.
ALEXANDRIA MN 320-852-7500

THESE PLANS, AS INSTRUMENTS OF SERVICE ARE PROPERTY SOLELY OF CONTECH BRIDGE SOLUTIONS INC. THEY ARE NOT TO BE REPRODUCED FOR ANY PURPOSE OR USED IN ANY OTHER LOCATION WITHOUT WRITTEN AUTHORIZATION.

PEDESTRIAN BRIDGE

PRELIMINARY ONLY
NOT FOR CONSTRUCTION

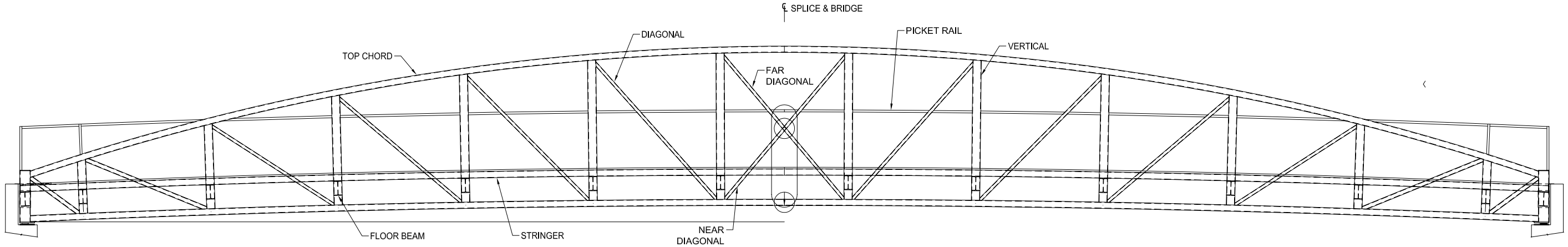

BRIDGE ELEVATION

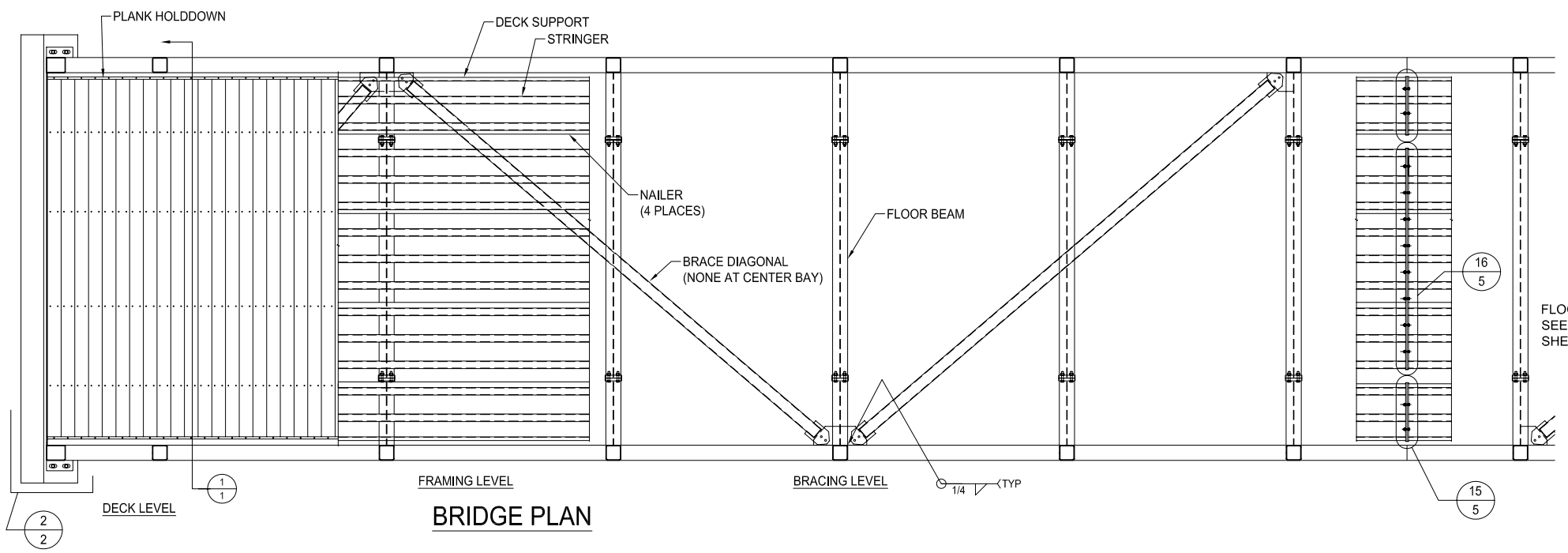

BRIDGE PLAN

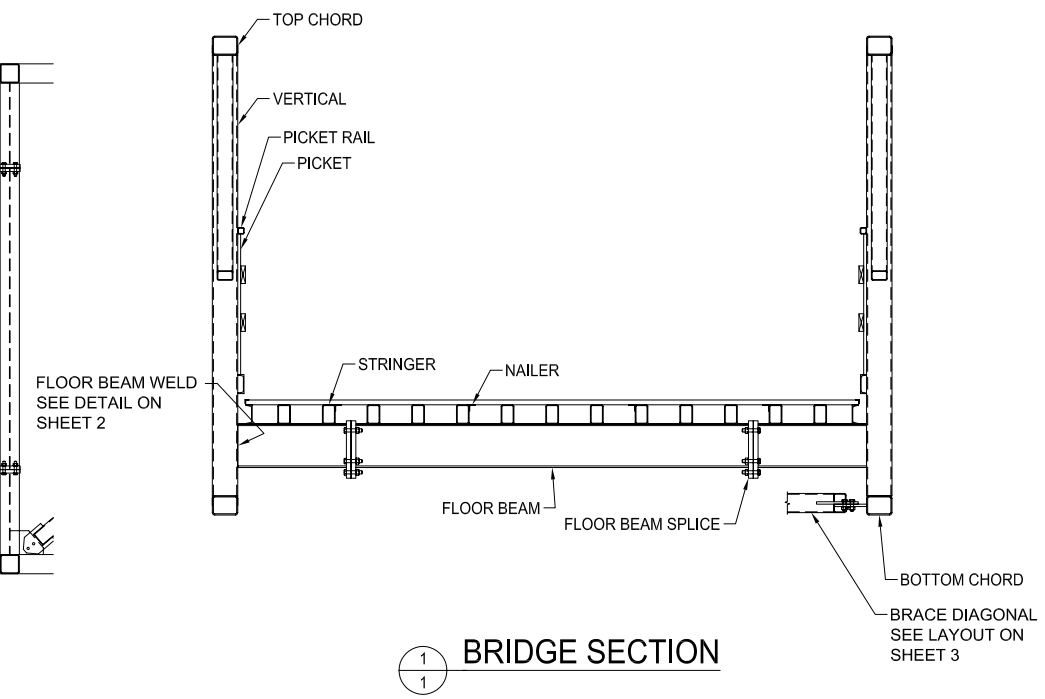

1/1 BRIDGE SECTION

NOTICE
© 2008, The design and information shown on this drawing is provided as a service to the project owner, engineer and contractor by CONTECH Bridge Solutions Inc. No part of this drawing may be used, reproduced, or modified in any manner without the prior written authorization of CONTECH Bridge Solutions Inc. Any such use, reproduction, or modification of this drawing is done at the user's own risk.

If discrepancies between the supplied information and actual field conditions are encountered as site work progresses, these discrepancies must be reported to CONTECH Bridge Solutions Inc., immediately for re-evaluation of the design. CONTECH Bridge Solutions Inc. accepts no liability for designs based on inaccurate information supplied by others.

Level:	Date:	Description:	By:

REVISIONS

Company: CONTECH BRIDGE SOLUTIONS INC.
8301 State Highway 29 N Alexandria, Minnesota 56308
800-328-2047 320-852-7500 320-852-7067 FAX

CONTECH Product: CONTINENTAL BRIDGE

Project Status:		
Designed	Drawn	Date Drawn:
Checked	Approved	Job No.

Sheet No. of

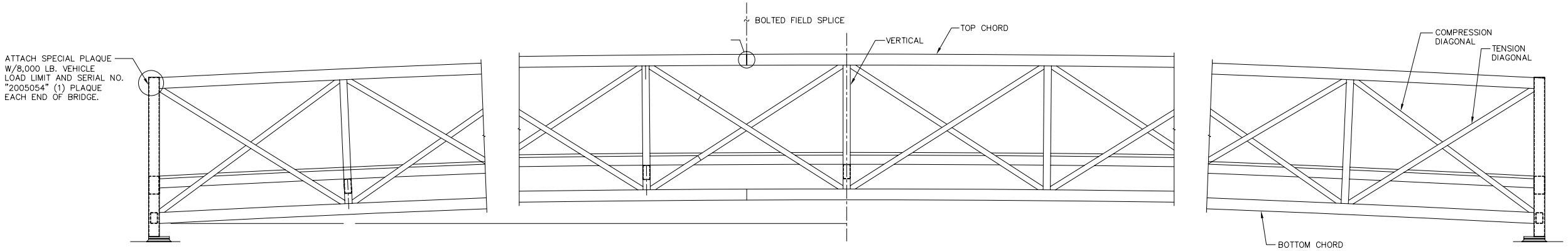

BRIDGE ELEVATION

PICKET RAIL PANELS NOT SHOWN IN ELEVATION. SEE BRIDGE SECTION & PICKET PANEL DETAILS ON SHEET 4 FOR CORRECT QUANTITY AND LOCATION.

SHOP NOTE:
EXTEND STRINGERS, CENTER NAILER & PLANK SUPPORTS ON 59'-7" SECTION TO MAKE LONGER.

SPACING OF PICKETS, PICKET RAIL AND TOE RAIL PRODUCE MAXIMUM OPENINGS OF LESS THAN 4 INCHES.

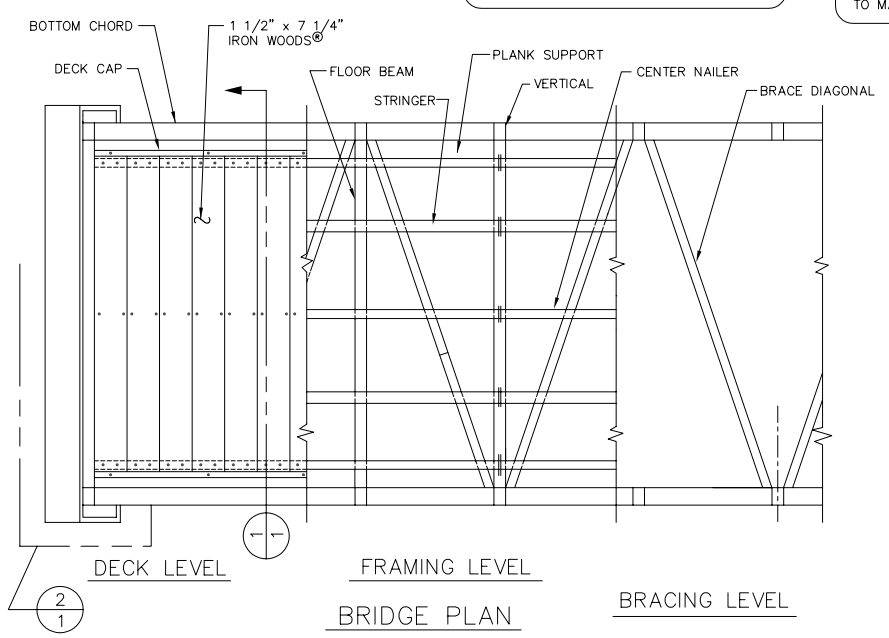

BRIDGE PLAN

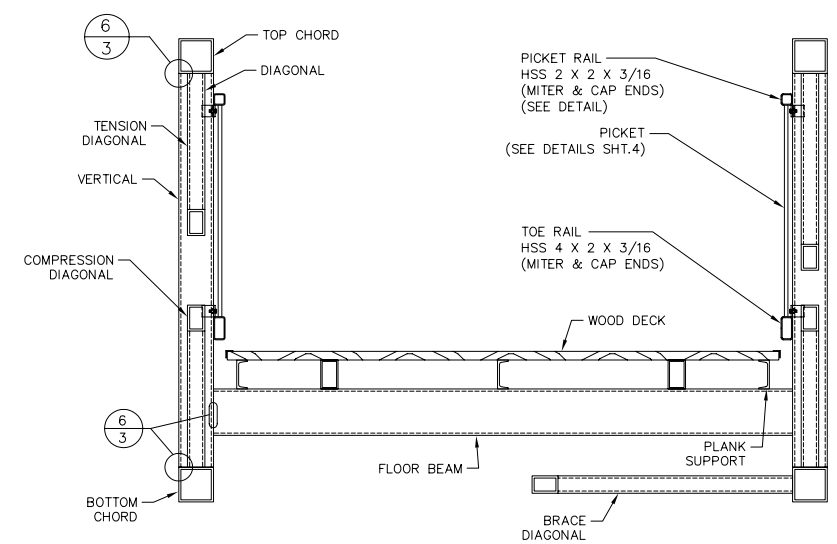

1 BRIDGE SECTION

CAUTION:

WE ARE PROVIDING A WOOD DECK ON THIS STRUCTURE IN ACCORDANCE WITH THE SPECIFICATIONS AND/OR THE CONTRACT DOCUMENTS. BE AWARE THAT MOST PEDESTRIAN BRIDGE LIABILITY CLAIMS ARE STATISTICALLY SLIP AND FALL CLAIMS. IT IS THE OWNER'S RESPONSIBILITY TO KEEP THE DECK FREE FROM SLIP OR TRIP HAZARDS DUE TO CUPPING, SPLITS, GAPS AND SMOOTH SURFACES.

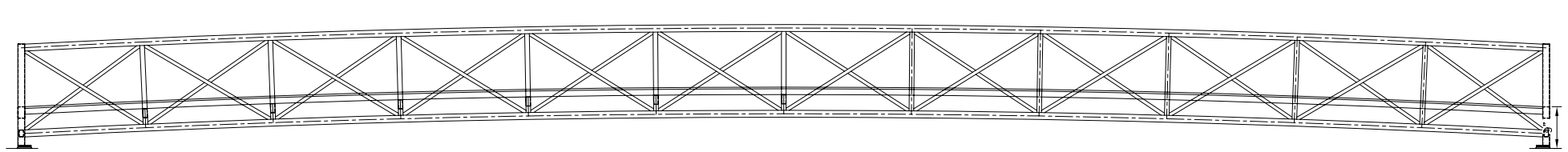

CONTINENTAL BRIDGE

ALEXANDRIA MN 320-852-7500

QUALITY MAJOR BRIDGES AISC CERTIFICATION

THESE PLANS, AS INSTRUMENTS OF SERVICE ARE PROPERTY SOLELY OF CONTINENTAL BRIDGE. THEY ARE NOT TO BE REPRODUCED FOR ANY PURPOSE OR USED IN ANY OTHER LOCATION WITHOUT WRITTEN AUTHORIZATION.

REV. BY:	DATE:	LEVEL:	REVISION:
KBK	5/25/05	A	REV. PICKETS TO BOLT ON; REV. TRUSS WIDTH FROM 8'-6"; ADDED PAINT COLORS

I HEREBY CERTIFY THAT THIS PLAN WAS PREPARED BY ME OR UNDER MY DIRECT SUPERVISION AND THAT I AM A DULY REGISTERED PROFESSIONAL ENGINEER UNDER THE LAWS OF THE STATE OF

DATE:

REG. NO.

DESIGNED BY:	DRAWN BY:	CHECKED BY:	APPROVED BY:

DATE:	SHEET NO. OF	JOB #

APPENDIX E2

UNDERPASS CROSSING

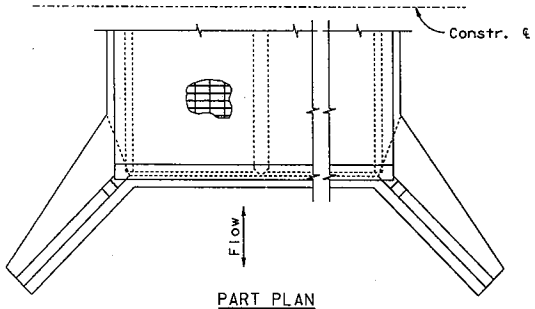

PART PLAN
Showing Inlet & Outlet Details

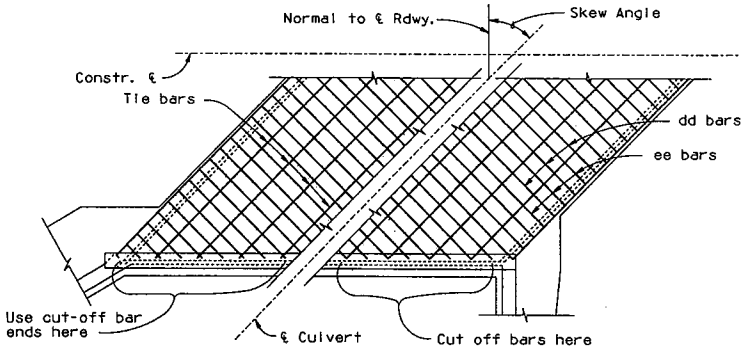

PART PLAN-SKEWED CULVERT
Showing Reinf. Steel Placement

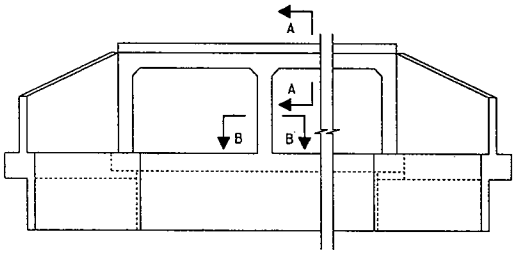

TYPICAL ELEVATION-OUTLET END

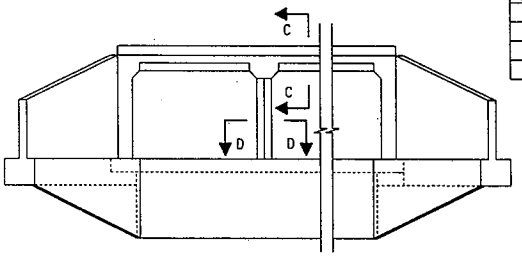

TYPICAL ELEVATION-INLET END

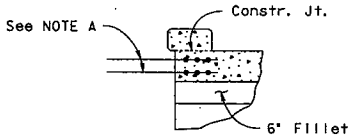

SECTION A-A

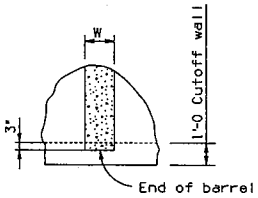

SECTION B-B

Span 'S'	Dim. 'X'
6'	3"
8'	4"
10'	5"
12'	6"

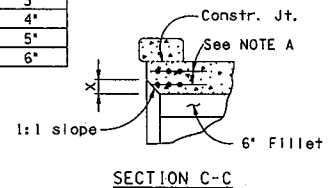

SECTION C-C

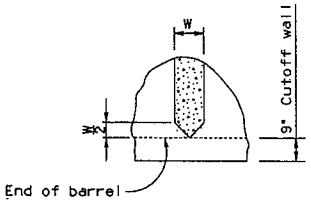

SECTION D-D

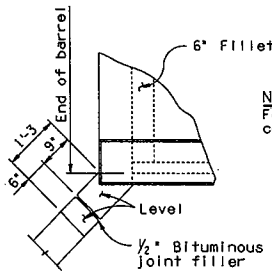

WINGWALL JOINT DETAIL
For all barrels under 8ft. (H<8')

NOTE
Footing shall be contiuous with no joint.

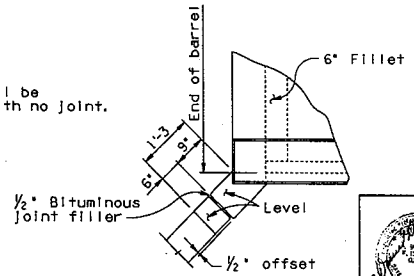

WINGWALL JOINT DETAIL
For all barrels 8ft. and over (H≥8')

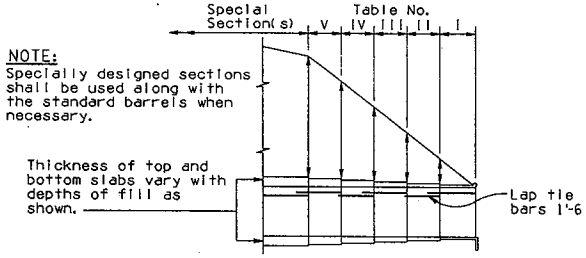

NOTE:
Specially designed sections shall be used along with the standard barrels when necessary.

DIAGRAM SHOWING TABLES TO BE USED FOR VARIOUS FILL HEIGHTS

NOTE: Culvert barrels always begin and end with Table No. I.

GENERAL NOTES:

Construction Specification - Arizona Department of Transportation Standard Specifications for Road and Bridge Construction, latest Edition.

Design Specifications - AASHTO Standard Specifications for Highway Bridges, Edition of 1989 and 1990 Interim Specifications.

Loading Class - HS20-44 and/or Interstate Alternate Loading.

All concrete shall be Class "S" unless noted otherwise.

Reinforcing steel shall conform to ASTM Specification A615. Bar sizes #6 and smaller shall be designed as Grade 40 but may be furnished as Grade 40 or Grade 60. Bar sizes #7 and larger shall be designed and furnished as Grade 60.

All bend dimensions for reinforcing steel shall be out-to-out of bars. All placement dimensions for reinforcing steel shall be to center of bars unless noted otherwise.

All reinforcing steel shall have 2 inch clear cover unless noted otherwise.

Stresses:
Concrete ..... f'c = 3000 psi
Grade 40 reinforcing steel ..... fs = 20000 psi
Grade 60 reinforcing steel ..... fs = 24000 psi

Chamfer all exposed corners ¾" as per Standard B-19.10 unless noted otherwise.

Dimensions shall not be scaled from drawings.

QUANTITY NOTE:

Total Box Culvert Quantities include Barrel Quantities and Headwall Quantities. Add Apron Quantity when apron is used.
Standard headwall quantities include wings, curb and cut-off wall.
Barrel Quantities are obtained by mutiplying length of box by quantities per linear foot of box.

JOINT NOTE:

All structures shall have formed Constr. joints in top slab and walls (optional in floor slab) spaced not more than 38'-6" apart or as shown. Reinforcing steel shall project 1'-6" thru the joint. The joint shall be made with ¼" plywood bulkhead which shall be left in place. Joints shall be perpendicular to the centerline of the box.

NOTE A:

For culverts skewed over 5° to 30° use 3#7 bars* top and bottom of slab. For culverts skewed over 30° to 45°, use 3#8 bars* top and bottom of slab. For culverts skewed over 45°, a special edge beam design is required.
*Reinforcing bar quantities have to be calculated.

NO	DESCRIPTION OF REVISIONS	MADE BY	DATE
1	Revised & Modified Standards.	J. M.	4-92
2			
3			
4			

DESIGN
DRAWN A. M. 4-92
CHECKED

DESIGN APPROVED
APPROVED FOR DISTRIBUTION

ARIZONA
DEPARTMENT OF TRANSPORTATION
HIGHWAYS DIVISION
STANDARD DRAWINGS

MISCELLANEOUS DETAILS
FOR STANDARD BOX CULVERTS

REVISION 4-92

STANDARD NO. B-01.10

ZFile051820\58818.DGN3 VIEW NAME:
07-MAY-1992 13:34

TABLE NO. I
0'-10' FILL

Span 'S'	Height 'H'	Slab 'T'	Walls 'W'	aa Spacing	aa Length	cc Number +	ee Bar Size	ee Spacing	ee Length	gg Number +	hh Bar Size	hh Spacing	hh Length	F
6'	3'	9½"	9"	12"	4'-2	20	5	6"	7'-2	14	4	9"	5'-2	2'-6
	4'	9½"	9"	12"	5'-2	24	5	6"	7'-2	16	4	8"	5'-11	2'-9
	5'	9½"	9"	12"	6'-2	24	5	6"	7'-2	16	4	6"	6'-5	2'-9
	6'	9½"	9"	12"	7'-2	28	6	8"	7'-2	18	4	6"	7'-2	3'-0
	7'	9½"	9"	12"	8'-2	32	6	8"	7'-2	18	4	6"	7'-8	3'-0
8'	3'	10"	11"	12"	4'-3	20	6	9"	9'-6	18	4	6"	6'-2	3'-5
	4'	10"	11"	12"	5'-3	24	6	8"	9'-6	20	4	6"	6'-8	3'-5
	5'	10"	11"	12"	6'-3	24	6	8"	9'-6	20	4	6"	7'-1	3'-4
	6'	10"	11"	12"	7'-3	28	6	8"	9'-6	20	4	6"	7'-7	3'-4
	7'	10"	11"	12"	8'-3	32	6	6"	9'-6	22	4	6"	8'-0	3'-3
	8'	10"	11"	12"	9'-3	32	6	6"	9'-6	22	4	6"	8'-5	3'-2
10'	3'	10"	13"	12"	4'-3	20	6	8"	11'-10	22	5	6"	7'-4	4'-5
	4'	10"	13"	12"	5'-3	24	6	8"	11'-10	22	5	6"	7'-10	4'-5
	5'	10"	13"	12"	6'-3	24	6	7"	11'-10	24	5	7"	8'-3	4'-4
	6'	10"	13"	12"	7'-3	28	6	7"	11'-10	24	5	7"	8'-9	4'-4
	7'	10"	13"	12"	8'-3	32	6	7"	11'-10	26	5	7"	9'-2	4'-3
	8'	10"	13"	12"	9'-3	32	6	7"	11'-10	26	5	7"	9'-8	4'-3
	9'	10"	13"	12"	10'-3	36	6	6"	11'-10	28	5	8"	10'-1	4'-2
	10'	10½"	13"	12"	11'-4	40	6	6"	11'-10	28	5	8"	10'-7	4'-2
12'	8'	11½"	15"	9"	9'-6	32	7	6"	14'-2	38	6	6"	10'-4	4'-8
	9'	11½"	15"	8"	10'-6	36	8	8"	14'-2	38	6	6"	10'-10	4'-8
	10'	11½"	15"	6"	11'-6	40	7	6"	14'-2	40	6	6"	11'-4	4'-8
	11'	12"	15"	8"	12'-7	40	8	8"	14'-2	42	6	6"	11'-6	4'-4
	12'	12"	15"	6"	13'-7	44	8	6"	14'-2	46	6	6"	12'-2	4'-6

TABLE NO. II
10'-15' FILL

Span 'S'	Height 'H'	Slab 'T'	Walls 'W'	aa Spacing	aa Length	cc Number +	ee Bar Size	ee Spacing	ee Length	gg Number +	hh Bar Size	hh Spacing	hh Length	F
6'	3'	8"	9"	12"	3'-11	20	5	8"	7'-2	14	4	6"	5'-1	2'-6
	4'	8"	9"	12"	4'-11	24	5	8"	7'-2	14	4	6"	5'-7	2'-6
	5'	8"	9"	12"	5'-11	24	5	6"	7'-2	14	4	6"	6'-1	2'-6
	6'	8"	9"	12"	6'-11	28	6	9"	7'-2	14	4	6"	6'-7	2'-6
	7'	8"	9"	12"	7'-11	32	6	9"	7'-2	14	4	6"	7'-1	2'-6
8'	3'	9"	11"	9"	4'-1	20	5	6"	9'-6	18	5	6"	5'-8	2'-10
	4'	9"	11"	9"	5'-1	24	5	6"	9'-6	18	5	6"	6'-2	2'-10
	5'	9½"	11"	9"	6'-2	24	6	6"	9'-6	18	5	6"	6'-8	2'-10
	6'	9½"	11"	9"	7'-2	28	6	6"	9'-6	18	5	6"	7'-1	2'-9
	7'	9½"	11"	12"	8'-2	32	6	6"	9'-6	18	5	6"	7'-7	2'-9
	8'	9½"	11"	12"	9'-2	32	6	6"	9'-6	18	5	6"	8'-1	2'-9
10'	3'	10½"	13"	8"	4'-4	20	6	6"	11'-10	22	6	6"	6'-9	3'-8
	4'	10½"	13"	8"	5'-4	24	6	6"	11'-10	22	6	6"	7'-2	3'-7
	5'	10½"	13"	9"	6'-4	24	6	6"	11'-10	22	6	6"	7'-7	3'-6
	6'	11"	13"	8"	7'-5	28	7	8"	11'-10	22	6	8"	8'-1	3'-6
	7'	11"	13"	8"	8'-5	32	7	8"	11'-10	22	6	8"	8'-6	3'-5
	8'	11"	13"	10"	9'-5	32	7	7"	11'-10	22	6	7"	9'-0	3'-5
	9'	11½"	13"	11"	10'-6	36	7	7"	11'-10	22	6	7"	9'-6	3'-4
	10'	11½"	13"	11"	11'-6	40	7	6"	11'-10	22	6	9"	10'-0	3'-4
12'	8'	13"	15"	10"	9'-9	32	8	7"	14'-2	26	6	7"	9'-5	3'-8
	9'	13"	15"	10"	10'-9	36	8	7"	14'-2	26	6	7"	9'-11	3'-8
	10'	13"	15"	10"	11'-9	40	8	7"	14'-2	26	6	7"	10'-5	3'-8
	11'	13"	15"	10"	12'-9	40	9	7"	14'-2	26	6	7"	11'-0	3'-9
	12'	13½"	15"	7"	13'-10	44	8	7"	14'-2	26	6	7"	11'-7	3'-9

TABLE NO. III
15'-20' FILL

Span 'S'	Height 'H'	Slab 'T'	Walls 'W'	aa Spacing	aa Length	cc Number +	ee Bar Size	ee Spacing	ee Length	gg Number +	hh Bar Size	hh Spacing	hh Length	F
6'	3'	9"	9"	12"	4'-1	20	5	6"	7'-2	14	4	6"	5'-2	2'-6
	4'	9"	9"	12"	5'-1	24	5	6"	7'-2	14	4	6"	5'-8	2'-6
	5'	9"	9"	12"	6'-1	24	6	8"	7'-2	14	4	6"	6'-2	2'-6
	6'	9"	9"	12"	7'-1	28	6	6"	7'-2	14	4	6"	6'-8	2'-6
	7'	9"	9"	12"	8'-1	32	6	6"	7'-2	14	4	6"	7'-2	2'-6
8'	3'	10½"	11"	7"	4'-4	20	6	7"	9'-6	18	5	7"	5'-7	2'-8
	4'	10½"	11"	10"	5'-4	24	6	6"	9'-6	18	5	6"	6'-1	2'-8
	5'	10½"	11"	9"	6'-4	24	6	6"	9'-6	18	5	6"	6'-7	2'-8
	6'	11"	11"	11"	7'-5	28	7	7"	9'-6	18	5	7"	7'-2	2'-8
	7'	11"	11"	11"	8'-5	32	7	8"	9'-6	18	5	8"	7'-8	2'-8
	8'	11"	11"	12"	9'-5	32	7	6"	9'-6	18	5	8"	8'-2	2'-8
10'	3'	12½"	13"	6"	4'-8	20	6	6"	11'-10	22	6	6"	6'-7	3'-4
	4'	12½"	13"	7"	5'-8	24	7	7"	11'-10	22	6	7"	7'-1	3'-4
	5'	12½"	13"	7"	6'-8	24	7	7"	11'-10	22	6	7"	7'-7	3'-4
	6'	12½"	13"	7"	7'-8	28	7	7"	11'-10	22	6	7"	8'-1	3'-4
	7'	12½"	13"	9"	8'-8	32	7	6"	11'-10	22	5	6"	8'-3	3'-2
	8'	13"	13"	9"	9'-9	32	7	6"	11'-10	22	5	6"	8'-10	3'-2
	9'	13"	13"	10"	10'-9	36	8	6"	11'-10	22	5	6"	9'-4	3'-2
	10'	13"	13"	11"	11'-9	40	8	6"	11'-10	22	5	6"	9'-10	3'-2
12'	8'	15"	15"	10"	10'-1	32	8	7"	14'-2	26	6	7"	9'-6	3'-7
	9'	15"	15"	10"	11'-1	36	9	7"	14'-2	26	6	7"	10'-0	3'-7
	10'	15½"	15"	10"	12'-2	40	8	6"	14'-2	26	6	8"	10'-7	3'-7
	11'	15½"	15"	10"	13'-2	40	8	6"	14'-2	26	6	6"	11'-2	3'-8
	12'	15½"	15"	6"	14'-2	44	8	6"	14'-2	26	6	6"	11'-9	3'-9

TABLE NO. IV
20'-25' FILL

Span 'S'	Height 'H'	Slab 'T'	Walls 'W'	aa Spacing	aa Length	cc Number +	ee Bar Size	ee Spacing	ee Length	gg Number +	hh Bar Size	hh Spacing	hh Length	F
6'	3'	10"	9"	12"	4'-3	20	6	8"	7'-2	14	4	6"	5'-3	2'-6
	4'	10"	9"	12"	5'-3	24	6	6"	7'-2	14	4	6"	5'-9	2'-6
	5'	10"	9"	12"	6'-3	24	6	6"	7'-2	14	4	6"	6'-3	2'-6
	6'	10"	9"	12"	7'-3	28	7	9"	7'-2	14	4	6"	6'-9	2'-6
	7'	10"	9"	12"	8'-3	32	7	9"	7'-2	14	4	6"	7'-3	2'-6
8'	3'	12"	11"	11"	4'-7	20	7	7"	9'-6	18	5	7"	5'-9	2'-8
	4'	12"	11"	12"	5'-7	24	7	8"	9'-6	18	5	6"	6'-1	2'-8
	5'	12"	11"	12"	6'-7	24	7	6"	9'-6	18	5	8"	6'-7	2'-8
	6'	12"	11"	12"	7'-7	28	7	7"	9'-6	18	5	7"	6'-1	2'-8
	7'	12"	11"	12"	8'-7	32	7	6"	9'-6	18	5	9"	6'-7	2'-8
	8'	12½"	11"	12"	9'-8	32	7	6"	9'-6	18	4	6"	6'-1	2'-8
10'	3'	14"	13"	6"	4'-11	20	8	9"	11'-10	22	6	6"	6'-6	3'-2
	4'	14"	13"	6"	5'-11	24	8	8"	11'-10	22	6	8"	7'-0	3'-2
	5'	14"	13"	7"	6'-11	24	8	7"	11'-10	22	6	7"	7'-6	3'-2
	6'	14½"	13"	7"	8'-0	28	8	7"	11'-10	22	6	7"	8'-1	3'-2
	7'	14½"	13"	8"	9'-0	32	9	8"	11'-10	22	5	6"	8'-5	3'-2
	8'	14½"	13"	8"	10'-0	32	9	8"	11'-10	22	5	6"	8'-11	3'-2
	9'	14½"	13"	9"	11'-0	36	9	9"	11'-10	22	5	6"	9'-5	3'-2
	10'	15"	13"	8"	12'-0	40	9	8"	11'-10	22	5	6"	9'-11	3'-2
12'	8'	17"	15"	10"	10'-5	32	8	6"	14'-2	26	5	6"	9'-6	3'-6
	9'	17½"	15"	9"	11'-6	36	9	6"	14'-2	26	6	9"	10'-3	3'-7
	10'	17½"	15"	10"	12'-6	40	10	9"	14'-2	26	5	6"	10'-7	3'-7
	11'	17½"	15"	7"	13'-6	40	9	7"	14'-2	26	6	7"	11'-5	3'-8
	12'	17½"	15"	7"	14'-6	44	10	7"	14'-2	26	6	7"	12'-0	3'-9

+Total number of bars in the cross-section.

TABLE NO. V
25'-30' FILL

Span 'S'	Height 'H'	Slab 'T'	Walls 'W'	aa Spacing	aa Length	cc Number +	ee Bar Size	ee Spacing	ee Length	gg Number +	hh Bar Size	hh Spacing	hh Length	F
6'	3'	10½"	9"	12"	4'-4	20	6	6"	7'-2	14	4	6"	5'-3	2'-6
	4'	11"	9"	12"	5'-5	24	6	6"	7'-2	14	4	6"	5'-10	2'-6
	5'	11"	9"	12"	6'-5	24	6	6"	7'-2	14	4	6"	6'-4	2'-6
	6'	11"	9"	12"	7'-5	28	7	8"	7'-2	14	4	6"	6'-10	2'-6
	7'	11"	9"	12"	8'-5	32	7	8"	7'-2	14	4	6"	7'-4	2'-6
8'	3'	13"	11"	7"	4'-9	20	7	7"	9'-6	18	5	7"	5'-10	2'-8
	4'	13"	11"	10"	5'-9	24	7	6"	9'-6	18	5	6"	6'-4	2'-8
	5'	13½"	11"	10"	6'-10	24	8	8"	9'-6	18	5	8"	6'-10	2'-8
	6'	13½"	11"	11"	7'-10	28	8	8"	9'-6	18	5	8"	7'-4	2'-8
	7'	13½"	11"	11"	8'-10	32	8	6"	9'-6	18	4	6"	7'-10	2'-8
	8'	13½"	11"	12"	9'-10	32	8	8"	9'-6	18	4	6"	8'-4	2'-8
10'	3'	16"	13"	6"	5'-3	20	7	6"	11'-10	22	6	8"	7'-0	3'-5
	4'	16"	13"	7"	6'-3	24	8	7"	11'-10	22	6	7"	7'-6	3'-5
	5'	16"	13"	8"	7'-3	24	8	8"	11'-10	22	6	8"	8'-0	3'-4
	6'	16"	13"	8"	8'-3	28	8	8"	11'-10	22	6	8"	8'-4	3'-4
	7'	16"	13"	8"	9'-3	32	8	8"	11'-10	22	5	6"	8'-8	3'-3
	8'	16"	13"	9"	10'-3	32	8	6"	11'-10	22	5	6"	9'-2	3'-3
	9'	16"	13"	9"	11'-3	36	8	6"	11'-10	22	5	6"	9'-7	3'-2
	10'	16½"	13"	12"	12'-4	40	8	6"	11'-10	22	5	6"	10'-1	3'-2
12'	8'	19½"	15"	8"	10'-10	32	10	8"	14'-2	26	5	6"	9'-8	3'-6
	9'	19½"	15"	10"	11'-10	36	10	7"	14'-2	26	5	7"	10'-2	3'-6
	10'	19½"	15"	10"	12'-10	40	9	6"	14'-2	26	5	6"	10'-8	3'-7
	11'	19½"	15"	8"	13'-10	40	10	8"	14'-2	26	6	8"	11'-6	3'-8
	12'	20"	15"	10"	14'-11	44	9	6"	14'-2	26	6	6"	12'-0	3'-9

QUANTITIES PER LINEAR FOOT OF BARREL

Span 'S'	Height 'H'	Table I Concrete C.Y.	Table I Reinf. Steel Lbs.	Table II Concrete C.Y.	Table II Reinf. Steel Lbs.	Table III Concrete C.Y.	Table III Reinf. Steel Lbs.	Table IV Concrete C.Y.	Table IV Reinf. Steel Lbs.	Table V Concrete C.Y.	Table V Reinf. Steel Lbs.
6'	3'	0.635	90.0	0.563	95.7	0.611	104.2	0.659	107.7	0.684	118.6
	4'	0.691	104.4	0.618	104.7	0.667	113.2	0.715	127.4	0.763	128.4
	5'	0.746	123.0	0.674	118.4	0.722	121.8	0.771	133.6	0.819	134.7
	6'	0.802	137.8	0.729	126.1	0.778	141.5	0.826	138.6	0.874	144.5
	7'	0.858	146.7	0.785	135.1	0.833	150.4	0.882	147.5	0.930	153.4
8'	3'	0.841	123.8	0.778	123.7	0.872	129.7	0.966	143.5	1.029	150.7
	4'	0.908	138.8	0.846	133.3	0.940	149.2	1.034	150.1	1.097	173.0
	5'	0.976	144.3	0.945	157.9	1.008	157.7	1.102	160.7	1.196	164.0
	6'	1.044	153.3	1.013	166.8	1.107	165.4	1.170	163.8	1.264	170.5
	7'	1.112	177.1	1.081	170.8	1.175	158.8	1.238	171.2	1.332	220.3
	8'	1.180	182.7	1.149	177.0	1.243	181.8	1.337	198.7	1.400	199.5
10'	3'	1.022	151.4	1.060	193.8	1.215	197.7	1.330	210.9	1.485	209.8
	4'	1.102	160.4	1.140	204.6	1.295	206.9	1.410	213.3	1.565	238.6
	5'	1.182	165.0	1.221	210.6	1.375	215.6	1.491	241.0	1.645	220.3
	6'	1.262	173.4	1.340	202.0	1.455	227.0	1.610	253.6	1.725	229.1
	7'	1.343	182.5	1.420	211.6	1.535	225.8	1.690	255.2	1.806	232.1
	8'	1.423	188.1	1.500	235.3	1.654	233.6	1.770	262.5	1.886	267.4
	9'	1.503	198.3	1.619	243.4	1.735	269.9	1.850	255.2	1.966	276.4
	10'	1.622	206.4	1.699	244.4	1.815	276.6	1.969	282.4	2.085	277.7
12'	8'	1.803	313.2	1.940	289.8	2.123	291.5	2.307	295.4	2.535	336.2
	9'	1.896	325.9	2.033	300.2	2.216	337.3	2.445	348.2	2.628	352.8
	10'	1.988	353.4	2.126	310.5	2.354	321.2	2.538	326.2	2.721	357.9
	11'	2.127	345.8	2.218	354.4	2.447	362.5	2.630	375.1	2.813	373.9
	12'	2.219	414.3	2.356	345.2	2.540	398.4	2.723	431.2	2.952	421.0

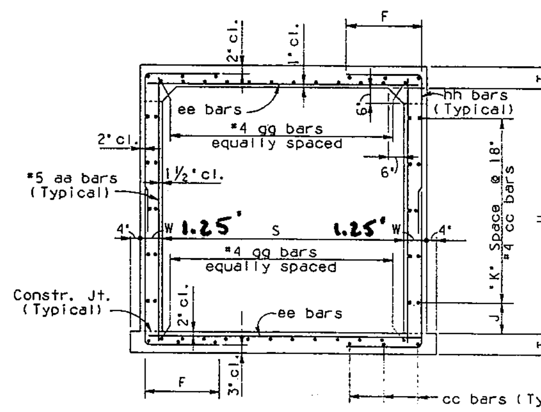

Height 'H'	'J' Dim.	'K' Spaces
3'	9"	1
4'	3"	2
5'	12"	2
6'	9"	3
7'	3"	4
8'	12"	4
9'	9"	5
10'	3"	5
11'	12"	6
12'	9"	7

TYPICAL SECTION

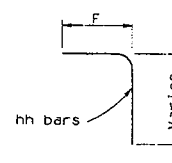

BENDS

NOTE: See B-01.10 for General Notes and Miscellaneous Details.

DESIGN APPROVED

APPROVED FOR DISTRIBUTION

ARIZONA
DEPARTMENT OF TRANSPORTATION
HIGHWAYS DIVISION
STANDARD DRAWINGS

REVISION

SINGLE BARREL
BOX CULVERT

STANDARD NO.
B-02.10

Skew ∡	θ_1	θ_2
0°	70°	70°
5°	75°	65°
10°	80°	60°
15°	85°	55°
20°	90°	50°

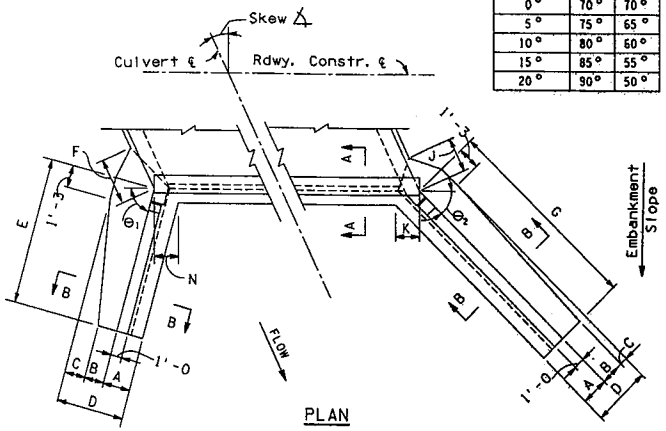

2 : 1 Slope	Skew ∡	0°					5°					10°					15°					20°				
	Height H	8'	9'	10'	11'	12'	8'	9'	10'	11'	12'	8'	9'	10'	11'	12'	8'	9'	10'	11'	12'	8'	9'	10'	11'	12'
Dimensions	A	2'-0	2'-1	2'-2	2'-3	2'-4	2'-0	2'-1	2'-2	2'-3	2'-4	2'-0	2'-1	2'-2	2'-3	2'-4	2'-0	2'-1	2'-2	2'-3	2'-4	2'-0	2'-1	2'-2	2'-3	2'-4
	B	1'-4	1'-5	1'-6	1'-7	1'-8	1'-4	1'-5	1'-6	1'-7	1'-8	1'-4	1'-5	1'-6	1'-7	1'-8	1'-4	1'-5	1'-6	1'-7	1'-8	1'-4	1'-5	1'-6	1'-7	1'-8
	C	1'-10	2'-2	2'-6	3'-0	3'-8	1'-11	2'-3	2'-7	3'-2	3'-10	1'-11	2'-4	2'-8	3'-3	4'-0	2'-0	2'-5	2'-9	3'-5	4'-1	2'-1	2'-6	2'-10	3'-6	4'-3
	D	5'-2	5'-8	6'-2	6'-10	7'-8	5'-3	5'-9	6'-3	7'-0	7'-10	5'-3	5'-10	6'-4	7'-1	8'-0	5'-4	5'-11	6'-5	7'-3	8'-1	5'-5	6'-0	6'-6	7'-4	8'-3
	E	14'-6	16'-0	17'-6	19'-0	20'-6	14'-0	15'-6	17'-0	18'-6	20'-0	14'-0	15'-6	17'-0	18'-6	20'-0	13'-6	15'-0	16'-6	18'-0	19'-6	13'-6	15'-0	16'-6	18'-0	19'-6
	F	3'-9	4'-3	4'-10	5'-7	6'-6	3'-10	4'-5	4'-11	5'-9	6'-9	3'-10	4'-6	5'-0	5'-11	6'-11	4'-0	4'-7	5'-2	6'-1	7'-1	4'-1	4'-9	5'-3	6'-2	7'-3
	G	14'-6	16'-0	17'-6	19'-0	20'-6	14'-6	16'-6	18'-0	19'-6	21'-0	15'-0	17'-0	18'-6	20'-0	22'-0	15'-6	17'-6	19'-0	21'-0	22'-6	16'-6	18'-6	20'-0	22'-0	23'-6
	J	3'-9	4'-3	4'-10	5'-7	6'-6	3'-10	4'-5	4'-11	5'-9	6'-9	3'-10	4'-6	5'-0	5'-11	6'-11	4'-0	4'-7	5'-2	6'-1	7'-1	4'-1	4'-9	5'-3	6'-2	7'-3
	K	1'-10¼	1'-11¾	2'-0⅝	2'-1½	2'-2½	1'-10½	1'-11¾	2'-0½	2'-1⅝	2'-2¾	1'-10½	1'-11⅝	2'-0⅞	2'-2	2'-3⅛	1'-11	2'-0¼	2'-1½	2'-2⅝	2'-3⅞	1'-11¾	2'-1⅛	2'-2⅝	2'-3¾	2'-5
	L	2'-3	2'-7	2'-10	3'-2	3'-5	2'-4	2'-7	2'-10	3'-2	3'-5	2'-2	2'-5	2'-8	2'-11	3'-3	2'-4	2'-7	2'-10	3'-1	3'-4	2'-4	2'-7	2'-10	3'-1	3'-4
	M	2'-3	2'-7	2'-10	3'-2	3'-5	2'-6	2'-7	2'-11	3'-3	3'-7	2'-7	2'-8	3'-1	3'-5	3'-6	2'-9	2'-11	3'-3	3'-6	3'-10	2'-9	3'-0	3'-5	3'-8	4'-1
	N	1'-10¼	1'-11¾	2'-0⅝	2'-1½	2'-2½	1'-10½	1'-11½	2'-0½	2'-1½	2'-2⅝	1'-10¾	1'-11¾	2'-0⅞	2'-1⅞	2'-2⅞	1'-11¼	2'-0¼	2'-1¼	2'-2⅜	2'-3⅜	2'-0	2'-1	2'-2	2'-3	2'-4

4 : 1 Slope	Skew ∡	0°					5°					10°					15°					20°				
	Height H	8'	9'	10'	11'	12'	8'	9'	10'	11'	12'	8'	9'	10'	11'	12'	8'	9'	10'	11'	12'	8'	9'	10'	11'	12'
Dimensions	A	2'-0	2'-1	2'-2	2'-3	2'-4	2'-0	2'-1	2'-2	2'-3	2'-4	2'-0	2'-1	2'-2	2'-3	2'-4	2'-0	2'-1	2'-2	2'-3	2'-4	2'-0	2'-1	2'-2	2'-3	2'-4
	B	1'-4	1'-5	1'-6	1'-7	1'-8	1'-4	1'-5	1'-6	1'-7	1'-8	1'-4	1'-5	1'-6	1'-7	1'-8	1'-4	1'-5	1'-6	1'-7	1'-8	1'-4	1'-5	1'-6	1'-7	1'-8
	C	1'-8	2'-0	2'-4	2'-10	3'-6	1'-9	2'-1	2'-5	2'-11	3'-6	1'-9	2'-1	2'-5	2'-11	3'-7	1'-9	2'-1	2'-5	3'-0	3'-8	1'-10	2'-2	2'-6	3'-0	3'-8
	D	5'-0	5'-6	6'-0	6'-8	7'-6	5'-1	5'-7	6'-1	6'-9	7'-6	5'-1	5'-7	6'-1	6'-9	7'-7	5'-1	5'-7	6'-1	6'-10	7'-8	5'-2	5'-8	6'-2	6'-10	7'-8
	E	22'-6	25'-0	27'-6	30'-0	32'-6	22'-0	24'-6	27'-0	29'-6	32'-0	22'-0	24'-0	26'-6	29'-0	31'-6	21'-6	24'-0	26'-6	29'-0	31'-0	21'-6	24'-0	26'-6	29'-0	31'-0
	F	3'-6	4'-1	4'-7	5'-4	6'-4	3'-8	4'-2	4'-9	5'-5	6'-4	3'-8	4'-2	4'-9	5'-5	6'-5	3'-8	4'-2	4'-9	5'-7	6'-6	3'-9	4'-3	4'-10	5'-7	6'-6
	G	22'-6	25'-0	27'-6	30'-0	32'-6	23'-0	25'-6	28'-0	30'-6	33'-0	23'-6	26'-0	28'-6	31'-0	34'-0	24'-0	27'-0	29'-6	32'-0	35'-0	25'-0	28'-0	30'-6	33'-6	36'-0
	J	3'-6	4'-1	4'-7	5'-4	6'-4	3'-8	4'-2	4'-9	5'-5	6'-4	3'-8	4'-2	4'-9	5'-5	6'-5	3'-8	4'-2	4'-9	5'-7	6'-6	3'-9	4'-3	4'-10	5'-7	6'-6
	K	1'-10¼	1'-11¾	2'-0⅝	2'-1½	2'-2½	1'-10½	1'-11¾	2'-0½	2'-1⅝	2'-2¾	1'-10½	1'-11⅝	2'-0⅞	2'-2	2'-3⅛	1'-11	2'-0¼	2'-1½	2'-2⅝	2'-3⅞	1'-11¾	2'-1⅛	2'-2⅝	2'-3¾	2'-5
	L	3'-9	4'-2	4'-7	5'-0	5'-5	3'-9	4'-2	4'-7	4'-11	5'-4	3'-8	4'-2	4'-6	4'-11	5'-4	3'-9	4'-1	4'-6	4'-10	5'-4	3'-8	4'-1	4'-5	4'-10	5'-4
	M	3'-9	4'-2	4'-7	5'-0	5'-5	3'-10	4'-3	4'-9	5'-2	5'-7	4'-0	4'-5	4'-11	5'-4	5'-8	4'-2	4'-6	5'-0	5'-6	5'-11	4'-3	4'-8	5'-3	5'-8	6'-2
	N	1'-10¼	1'-11¾	2'-0⅝	2'-1½	2'-2½	1'-10½	1'-11½	2'-0½	2'-1½	2'-2⅝	1'-10¾	1'-11¾	2'-0⅞	2'-1⅞	2'-2⅞	1'-11¼	2'-0¼	2'-1¼	2'-2¾	2'-3⅜	2'-0	2'-1	2'-2	2'-3	2'-4

6 : 1 Slope	Skew ∡	0°	5°	10°	15°	20°
	Height H	8'	8'	8'	8'	8'
Dimensions	A	2'-0	2'-0	2'-0	2'-0	2'-0
	B	1'-4	1'-4	1'-4	1'-4	1'-4
	C	1'-8	1'-8	1'-8	1'-9	1'-9
	D	5'-0	5'-0	5'-0	5'-1	5'-1
	E	28'-0	27'-6	27'-0	27'-0	27'-0
	F	3'-6	3'-6	3'-6	3'-8	3'-8
	G	28'-0	28'-0	29'-0	29'-6	30'-6
	J	3'-6	3'-6	3'-6	3'-8	3'-8
	K	1'-10¼	1'-10¼	1'-10½	1'-11	1'-11¾
	L	4'-8	4'-8	4'-8	4'-7	4'-7
	M	4'-8	4'-10	4'-11	5'-0	5'-2
	N	1'-10¼	1'-10½	1'-10¾	1'-11¼	2'-0

	Height H	'c' Bars: Short Wing Skew ∡ 0°	5°	10°	15°	20°	Long Wing Skew ∡ 0°	5°	10°	15°	20°	Dim 'X'	'd' Bars: Short Wing 0° to 10°	15° & 20°	Long Wing 0° to 20°
2:1 Slope	8'	2-#5	2-#5	2-#5	-	-	2-#5	2-#5	2-#5	3-#5	3-#5	2'-0	-	-	-
	9'	4-#5	4-#5	4-#5	3-#5	2-#5	4-#5	4-#5	4-#5	5-#5	5-#5	3'-0	-	-	-
	10'	6-#6	6-#6	5-#6	5-#6	4-#6	6-#6	7-#6	7-#6	7-#6	8-#6	4'-3	-	-	-
	11'	8-#7	8-#7	7-#7	6-#7	6-#7	8-#7	9-#7	9-#7	10-#7	10-#7	6'-9	5-#6	4-#6	5-#6
	12'	9-#7	8-#7	7-#7	6-#7	6-#7	9-#7	9-#7	9-#7	10-#7	10-#7	6'-9	8-#6	6-#6	8-#6
4:1 Slope	9'	6-#5	6-#5	5-#5	4-#5	3-#5	6-#5	6-#5	6-#5	7-#5	7-#5	3'-0	-	-	-
	10'	10-#5	10-#5	9-#5	8-#5	7-#5	10-#5	10-#5	11-#5	11-#5	12-#5	4'-0	-	-	-
	11'	14-#6	14-#6	13-#6	12-#6	12-#6	14-#6	15-#6	15-#6	16-#6	17-#6	5'-3	9-#6	8-#6	10-#6
	12'	14-#7	14-#7	13-#7	12-#7	11-#7	14-#7	14-#7	15-#7	16-#7	17-#7	6'-9	13-#6	12-#6	15-#6

• 'd' bars alternate with 'a' bars at high end of wall.

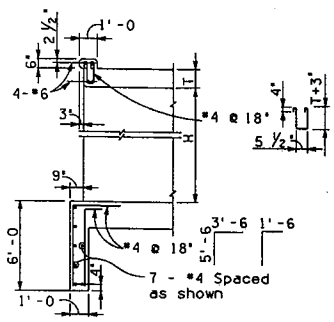

SECTION A-A

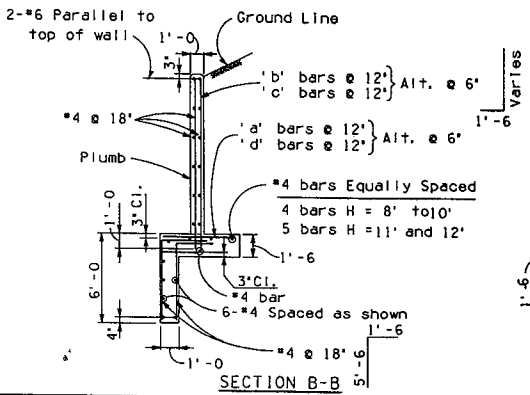

SECTION B-B

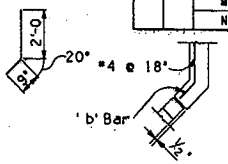

SECTION C-C

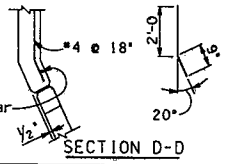

SECTION D-D

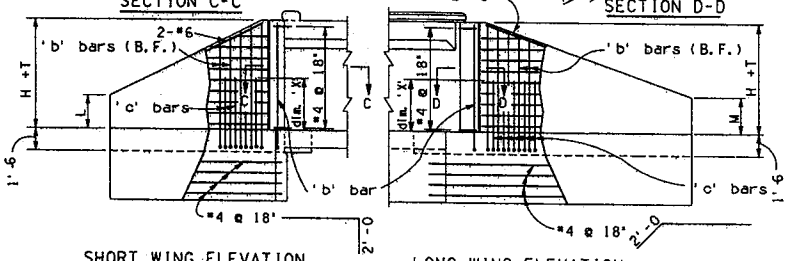

SHORT WING ELEVATION

LONG WING ELEVATION

Height H	'a' bars	'b' bars
8'	#5	#5
9'	#5	#5
10'	#6	#5
11'	#5	#5
12'	#6	#6

NOTE :

For General Notes and Miscellaneous Details see B-01.10.
For Headwall Quantities see B-05.10, B-05.20 and B-05.30.

DESIGN APPROVED	ARIZONA DEPARTMENT OF TRANSPORTATION HIGHWAYS DIVISION STANDARD DRAWINGS		REVISION 7-88
APPROVED FOR DISTRIBUTION	OUTLET WINGS CULVERT HEIGHT 8' to 12' SKEW 0° to 20°		STANDARD NO. B-04.20

REV	DESCRIPTION OF REVISIONS	DATE	BY
1	Revised cutoff wall	3-4-88	J.K.
2			
3			
4			

DESIGN
DRAWN
CHECKED

CADD FILENAME= 2FA
VIEW NAME=

Skew ∡	Θ_1
0°	45°
5°	55°
10°	65°
15°	75°
20°	85°

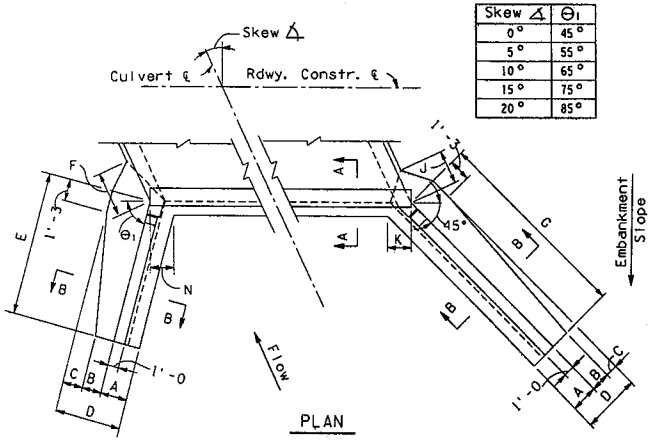

2 : 1 Slope	Skew ∡	0°					5°					10°					15°					20°				
	Height H	8'	9'	10'	11'	12'	8'	9'	10'	11'	12'	8'	9'	10'	11'	12'	8'	9'	10'	11'	12'	8'	9'	10'	11'	12'
Dimensions	A	2'-0	2'-1	2'-2	2'-3	2'-4	2'-0	2'-1	2'-2	2'-3	2'-4	2'-0	2'-1	2'-2	2'-3	2'-4	2'-0	2'-1	2'-2	2'-3	2'-4	2'-0	2'-1	2'-2	2'-3	2'-4
	B	1'-4	1'-5	1'-6	1'-9	1'-11	1'-4	1'-5	1'-6	1'-7	1'-9	1'-4	1'-5	1'-6	1'-7	1'-8	1'-4	1'-5	1'-6	1'-7	1'-8	1'-4	1'-5	1'-6	1'-7	1'-8
	C	2'-2	2'-7	3'-0	3'-6	4'-2	2'-2	2'-7	3'-0	3'-8	4'-4	2'-2	2'-7	3'-0	3'-8	4'-5	2'-2	2'-7	3'-0	3'-8	4'-5	2'-2	2'-7	3'-0	3'-8	4'-5
	D	5'-6	6'-1	6'-8	7'-6	8'-5	5'-6	6'-1	6'-8	7'-6	8'-5	5'-6	6'-1	6'-8	7'-6	8'-5	5'-6	6'-1	6'-8	7'-6	8'-5	5'-6	6'-1	6'-8	7'-6	8'-5
	E	13'-0	14'-6	16'-0	17'-0	18'-6	12'-6	14'-0	15'-6	16'-6	18'-0	12'-6	13'-6	15'-0	16'-6	18'-0	12'-6	14'-0	15'-0	16'-6	18'-0	13'-0	14'-6	15'-6	17'-0	18'-6
	F	4'-8	5'-4	6'-1	7'-1	8'-3	4'-7	5'-4	6'-0	7'-1	8'-3	4'-7	5'-3	5'-11	7'-0	8'-2	4'-6	5'-2	5'-10	6'-10	8'-0	4'-4	5'-0	5'-8	6'-8	7'-9
	G	13'-0	14'-6	16'-0	17'-0	18'-6	13'-6	15'-0	16'-6	18'-0	19'-6	14'-6	16'-0	17'-6	19'-0	20'-6	15'-0	17'-0	18'-6	20'-0	22'-0	16'-0	18'-0	19'-6	21'-6	23'-6
	J	4'-8	5'-4	6'-1	7'-1	8'-3	4'-7	5'-4	6'-0	7'-1	8'-3	4'-7	5'-3	5'-11	7'-0	8'-2	4'-6	5'-2	5'-10	6'-10	8'-0	4'-4	5'-0	5'-8	6'-8	7'-9
	K	2'-0⅞	2'-2⅝	2'-3¾	2'-5⅛	2'-6⅝	2'-0⅞	2'-2⅝	2'-3¾	2'-5⅛	2'-6⅝	2'-0⅞	2'-2⅝	2'-3¾	2'-5⅛	2'-6⅝	2'-0⅞	2'-2⅝	2'-3¾	2'-5⅛	2'-6⅝	2'-0⅞	2'-2⅝	2'-3¾	2'-5⅛	2'-6⅝
	L	4'-6	4'-11	5'-5	6'-1	6'-6	3'-11	4'-4	4'-9	5'-4	5'-8	3'-5	3'-11	4'-3	4'-7	4'-11	3'-0	3'-4	3'-10	4'-1	4'-4	2'-7	2'-10	3'-4	3'-7	3'-10
	M	4'-6	4'-11	5'-5	6'-1	6'-6	4'-3	4'-9	5'-3	5'-8	6'-2	3'-11	4'-5	4'-11	5'-4	5'-10	3'-9	4'-1	4'-6	5'-0	5'-3	3'-5	3'-8	4'-2	4'-6	4'-9
	N	2'-0⅞	2'-2⅝	2'-3¾	2'-5⅛	2'-6⅝	1'-11	2'-0¼	2'-1½	2'-2⅝	2'-3⅞	1'-10¼	1'-11⅜	2'-0½	2'-1⅝	2'-2¾	1'-10½	1'-11½	2'-0½	2'-1½	2'-2⅝	1'-11¼	2'-0¼	2'-1¼	2'-2⅝	2'-3⅞

4 : 1 Slope	Skew ∡	0°					5°					10°					15°					20°				
	Height H	8'	9'	10'	11'	12'	8'	9'	10'	11'	12'	8'	9'	10'	11'	12'	8'	9'	10'	11'	12'	8'	9'	10'	11'	12'
Dimensions	A	2'-0	2'-1	2'-2	2'-3	2'-4	2'-0	2'-1	2'-2	2'-3	2'-4	2'-0	2'-1	2'-2	2'-3	2'-4	2'-0	2'-1	2'-2	2'-3	2'-4	2'-0	2'-1	2'-2	2'-3	2'-4
	B	1'-8	1'-11	2'-2	2'-5	2'-8	1'-6	1'-9	2'-0	2'-3	2'-6	1'-5	1'-8	1'-11	2'-2	2'-4	1'-4	1'-6	1'-9	1'-11	2'-2	1'-4	1'-5	1'-6	1'-8	1'-10
	C	1'-6	1'-8	1'-10	2'-3	2'-9	1'-8	1'-10	2'-0	2'-5	2'-11	1'-9	1'-11	2'-1	2'-6	3'-1	1'-10	2'-1	2'-3	2'-9	3'-3	1'-10	2'-2	2'-6	3'-0	3'-7
	D	5'-2	5'-8	6'-2	6'-11	7'-9	5'-2	5'-8	6'-2	6'-11	7'-9	5'-2	5'-8	6'-2	6'-11	7'-9	5'-2	5'-8	6'-2	6'-11	7'-9	5'-2	5'-8	6'-2	6'-11	7'-9
	E	17'-0	19'-0	21'-0	23'-0	25'-0	17'-6	19'-6	21'-0	23'-0	25'-0	18'-0	19'-6	21'-6	23'-6	25'-6	18'-6	20'-6	22'-6	24'-6	26'-6	20'-0	22'-0	24'-0	26'-6	28'-6
	F	4'-2	4'-9	5'-4	6'-3	7'-4	4'-2	4'-9	5'-4	6'-3	7'-4	4'-1	4'-8	5'-3	6'-2	7'-3	4'-0	4'-7	5'-2	6'-1	7'-1	3'-11	4'-5	5'-0	5'-11	6'-11
	G	17'-0	19'-0	21'-0	23'-0	25'-0	18'-6	20'-6	22'-6	24'-6	26'-6	19'-6	22'-0	24'-0	26'-0	28'-6	21'-6	23'-6	26'-0	28'-6	30'-6	23'-6	26'-0	28'-6	31'-0	34'-0
	J	4'-2	4'-9	5'-4	6'-3	7'-4	4'-2	4'-9	5'-4	6'-3	7'-4	4'-1	4'-8	5'-3	6'-2	7'-3	4'-0	4'-7	5'-2	6'-1	7'-1	3'-11	4'-5	5'-0	5'-11	6'-11
	K	2'-0⅞	2'-2⅝	2'-3¾	2'-5⅛	2'-6⅝	2'-0⅞	2'-2⅝	2'-3¾	2'-5⅛	2'-6⅝	2'-0⅞	2'-2⅝	2'-3¾	2'-5⅛	2'-6⅝	2'-0⅞	2'-2⅝	2'-3¾	2'-5⅛	2'-6⅝	2'-0⅞	2'-2⅝	2'-3¾	2'-5⅛	2'-6⅝
	L	6'-1	6'-8	7'-4	8'-0	8'-8	5'-6	6'-1	6'-9	7'-4	7'-11	5'-0	5'-8	6'-2	6'-9	7'-3	4'-7	5'-1	5'-8	6'-2	6'-8	4'-1	4'-7	5'-1	5'-6	6'-0
	M	6'-1	6'-8	7'-4	8'-0	8'-8	5'-10	6'-5	7'-1	7'-9	8'-5	5'-7	6'-2	6'-10	7'-6	8'-0	5'-3	5'-11	6'-6	7'-0	7'-8	4'-11	5'-6	6'-0	6'-7	7'-1
	N	2'-0⅞	2'-2⅝	2'-3¾	2'-5⅛	2'-6⅝	1'-11	2'-0¼	2'-1½	2'-2⅝	2'-3⅞	1'-10¼	1'-11⅜	2'-0½	2'-1⅝	2'-2¾	1'-10½	1'-11½	2'-0½	2'-1½	2'-2⅝	1'-11¼	2'-0¼	2'-1¼	2'-2⅝	2'-3⅞

6 : 1 Slope	Skew ∡	0°	5°	10°	15°	20°
	Height H	8'	8'	8'	8'	8'
Dimensions	A	2'-0	2'-0	2'0	2'-0	2'-0
	B	1'-11	1'-10	1'-9	1'-8	1'-6
	C	1'-2	1'-3	1'-4	1'-5	1'-7
	D	5'-1	5'-1	5'-1	5'-1	5'-1
	E	19'-6	20'-0	21'-0	22'-0	24'-0
	F	4'-1	4'-0	4'-0	3'-11	3'-9
	G	19'-6	21'-0	22'-6	24'-6	27'-6
	J	4'-1	4'-0	4'-0	3'-11	3'-9
	K	2'-0⅞	2'-0⅞	2'-0⅞	2'-0⅞	2'-0⅞
	L	6'-9	6'-4	5'-11	5'-6	5'-1
	M	6'-9	6'-7	6'-5	6'-2	5'-10
	N	2'-0⅞	1'-11	1'-10¼	1'-10½	1'-11¼

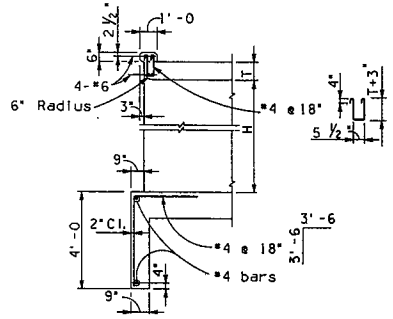

SECTION A-A

Height H	'a' bars	'b' bars
8'	#5	#5
9'	#6	#5
10'	#6	#5
11'	#6	#5
12'	#6	#6

	Height H	'c' Bars: Short Wing Skew ∡ 0°	5°	10°	15°	20°	Long Wing Wall	Dim 'X'	*'d' Bars: Short Wing 0° to 10°	15° & 20°	Long Wing 0° to 20°
2:1 Slope	8'	3-#5	3-#5	2-#5	2-#5	-	3-#5	2'-0	-	-	-
	9'	5-#5	4-#5	3-#5	3-#5	2-#5	5-#5	3'-0	-	-	-
	10'	8-#6	7-#6	6-#6	5-#6	4-#6	8-#6	4'-3	3-#5	-	3-#5
	11'	11-#7	10-#7	9-#7	7-#7	6-#7	11-#7	6'-9	6-#5	5-#5	6-#5
	12'	11-#7	10-#7	9-#7	7-#7	6-#7	11-#7	6'-9	9-#7	7-#6	9-#7
4:1 Slope	9'	7-#5	6-#5	6-#5	5-#5	4-#5	7-#5	3'-0	-	-	-
	10'	12-#5	11-#5	10-#5	9-#5	8-#5	12-#5	4'-0	-	-	-
	11'	18-#7	17-#7	16-#7	15-#7	14-#7	18-#7	6'-3	11-#5	6-#5	11-#5
	12'	18-#7	17-#7	16-#7	15-#7	14-#7	18-#7	6'-3	11-#6	11-#6	11-#6

* 'd' bars alternate with 'a' bars at high end of wall.

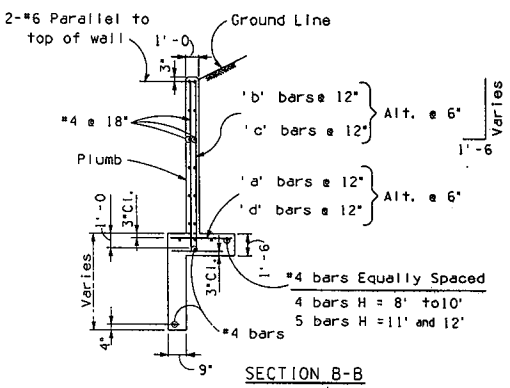

SECTION B-B

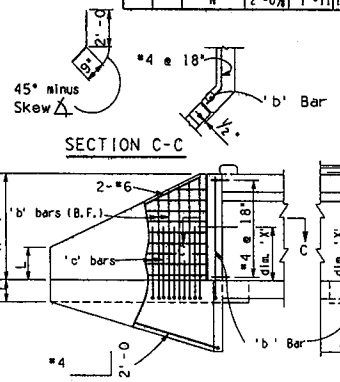

SECTION C-C

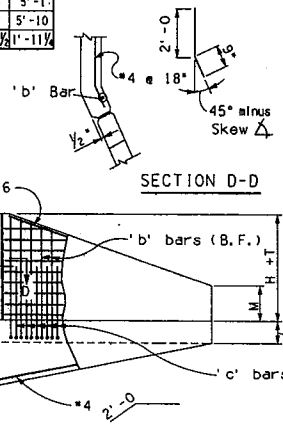

SECTION D-D

SHORT WING ELEVATION

LONG WING ELEVATION

NOTE :

For General Notes and Miscellaneous Details see B-01.10.
For Headwall Quantities see B-05.10, B-05.20 and B-05.30.

NO.	DESCRIPTION OF REVISIONS	MADE BY	DATE
1	Removed Flow Line	C.H.	6-98
2			
3			
4			

DESIGN
DRAWN
CHECKED

CADD FILENAME= ZFA
VIEW NAME=

DESIGN APPROVED: F. David Stanko
APPROVED FOR DISTRIBUTION:

ARIZONA
DEPARTMENT OF TRANSPORTATION
HIGHWAYS DIVISION
STANDARD DRAWINGS

INLET WINGS
CULVERT HEIGHT 8' to 12'
SKEW 0° to 20°

REVISION 4-92

STANDARD NO. B-04.40

12550 W Butler Dr.
El Mirage, AZ 85335
PHONE (602) 206-2076
FAX (623) 935-6100
www.contechbridge.com

TO: Joel Berman
DATE: 8/11/09
PROJECT: Peavine Trail
RE: Precast Underpass Option

The following is an **engineer's estimate** of construction materials and installation. A formal quotation can be issued after obtaining additional details about the project.

Items Included in This Proposal

- **CON/SPAN Precast Culvert System**
- **Precast Headwalls**
- **Precast Wingwalls**
- **Joint Sealing Material**
- **Freight to job site**
- **Field Installation Supervision**
- **Masonite Shims**
- **Installation Drawings for Foundation and Structure**

CULVERTS *Contractor to unload, set, grout structure and apply joint primer with sealer.*

(1) – 12' x 12' CON/SPAN, 80 LF:

(1) BARRELL 12' X 12' (10 units @ 8' lay lengths)		***$58,100***
(2) PRECAST HEADWALLS (1' tall, 10" thick)		***$1,800***
(4) PRECAST WINGWALLS		***$26,500***
	TOTAL	**$86,400**

Installation of ConSpan System: ***estimated*** ***$52,000***

- *Initial excavation and backfill*
- *Setting and grouting of system*
- *Crane rental – 1 day*
- *Pouring concrete footings*

Respectfully submitted,

Tara Anderson
Project Consultant

Peavine Trail

Precast ConSpan Underpass

Upstream

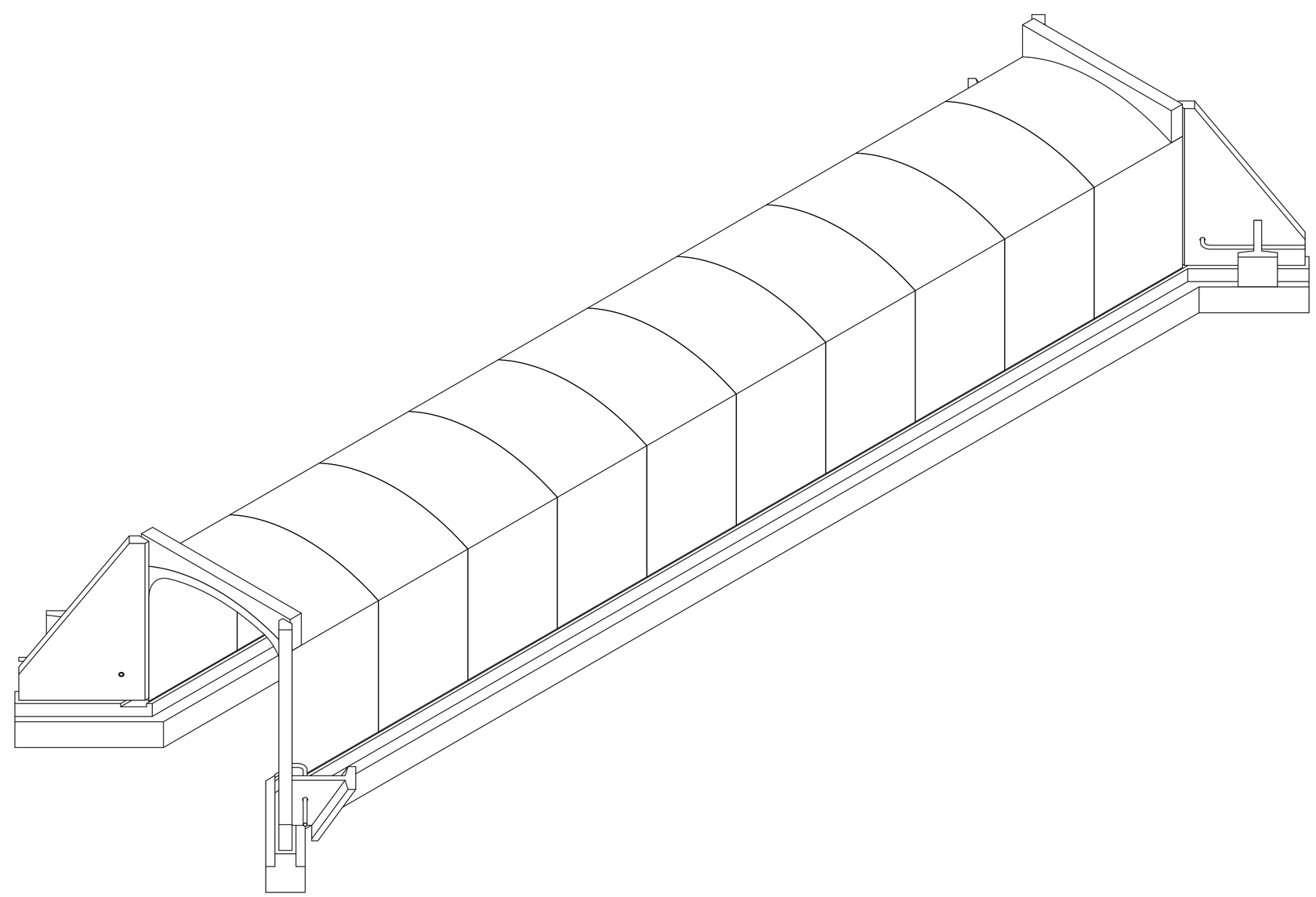

ISOMETRIC VIEW

Downstream

NOTICE
© 2006. The design and information shown on this drawing is provided as a service to the project owner, engineer and contractor by CONTECH Arch Technologies, Inc. No part of this drawing may be used, reproduced or modified in any manner without the prior written authorization of CONTECH Arch Technologies, Inc. Any such use, reproduction or modification of the drawing or any part thereof without the written consent of CONTECH Arch Technologies, Inc. will indemnify CONTECH Arch Technologies, Inc. from and against any and all claims, liability and expense, including, but not limited to, reasonable attorney's fees arising from such use, reproduction or modification.

If discrepancies between the supplied information and actual field conditions are encountered as site work progresses, these discrepancies must be reported to CONTECH Arch Technologies, Inc., immediately for re-evaluation of the design. CONTECH Arch Technologies, Inc. accepts no liability for designs based on inaccurate information supplied by others.

The CONSPAN ♦ Bridge System is protected by one or more patents, patent pending and Trademarks.

Preliminary Drawings prepared for:

Tara

Anderson

CONSPAN® BRIDGE SYSTEMS
3100 Research Blvd. P.O. Box 20266 Dayton, Ohio 45420-02366
Phone: (800) 526-3999 Fax: 937-254-8365
www.con-span.com

Precast ConSpan Underpass

Peavine Trail

Date: 08/11/09

DYOB No. 127020

Sheet No. **1**

Upstream

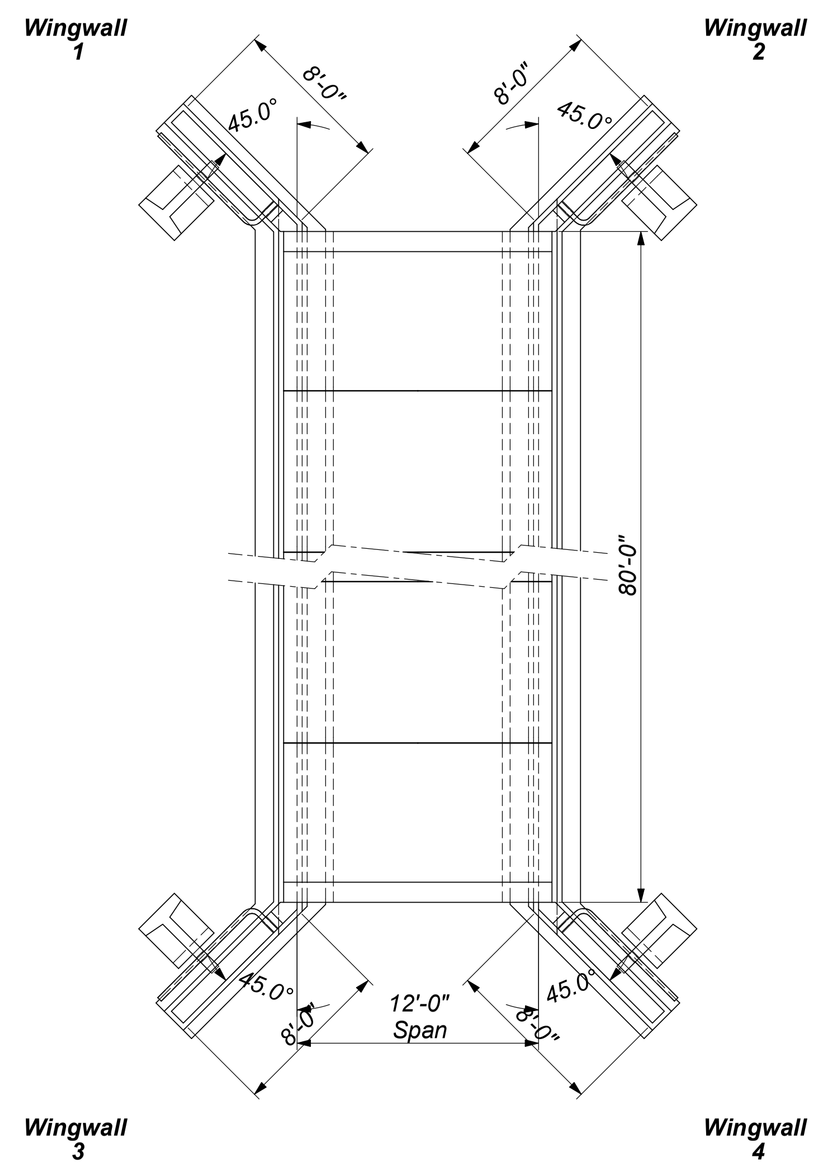

Downstream

BRIDGE PLAN

NOTICE:
© 2006. The design and information shown on this drawing is provided as a service to the project owner, engineer and contractor by CONTECH Arch Technologies, Inc. No part of this drawing may be used, reproduced or modified in any manner without the prior written authorization of CONTECH Arch Technologies, Inc. Any such use, reproduction or modification of this drawing without the prior written authorization of CONTECH Arch Technologies, Inc. may result in severe civil and criminal penalties. CONTECH Arch Technologies, Inc. from and against any and all claims, liability and expense, including, but not limited to, reasonable attorney's fees arising from such use, reproduction or modification.

If discrepancies between the supplied information and actual field conditions are encountered as site work progresses, these discrepancies must be reported to CONTECH Arch Technologies, Inc., immediately for re-evaluation of the design. CONTECH Arch Technologies, Inc. accepts no liability for designs based on inaccurate information supplied by others.

The CONSPAN, Bridge System is protected by one or more patents, patent pending and Trademarks.

Preliminary Drawings prepared for:

Tara

Anderson

CONSPAN® BRIDGE SYSTEMS
3100 Research Blvd. P.O. Box 20266 Dayton, Ohio 45420-02366
Phone: (800) 526-3999 Fax: 937-254-8365
www.con-span.com

Precast ConSpan Underpass

Peavine Trail

Date: 08/11/09

DYOB No. 127020

Sheet No. **2**

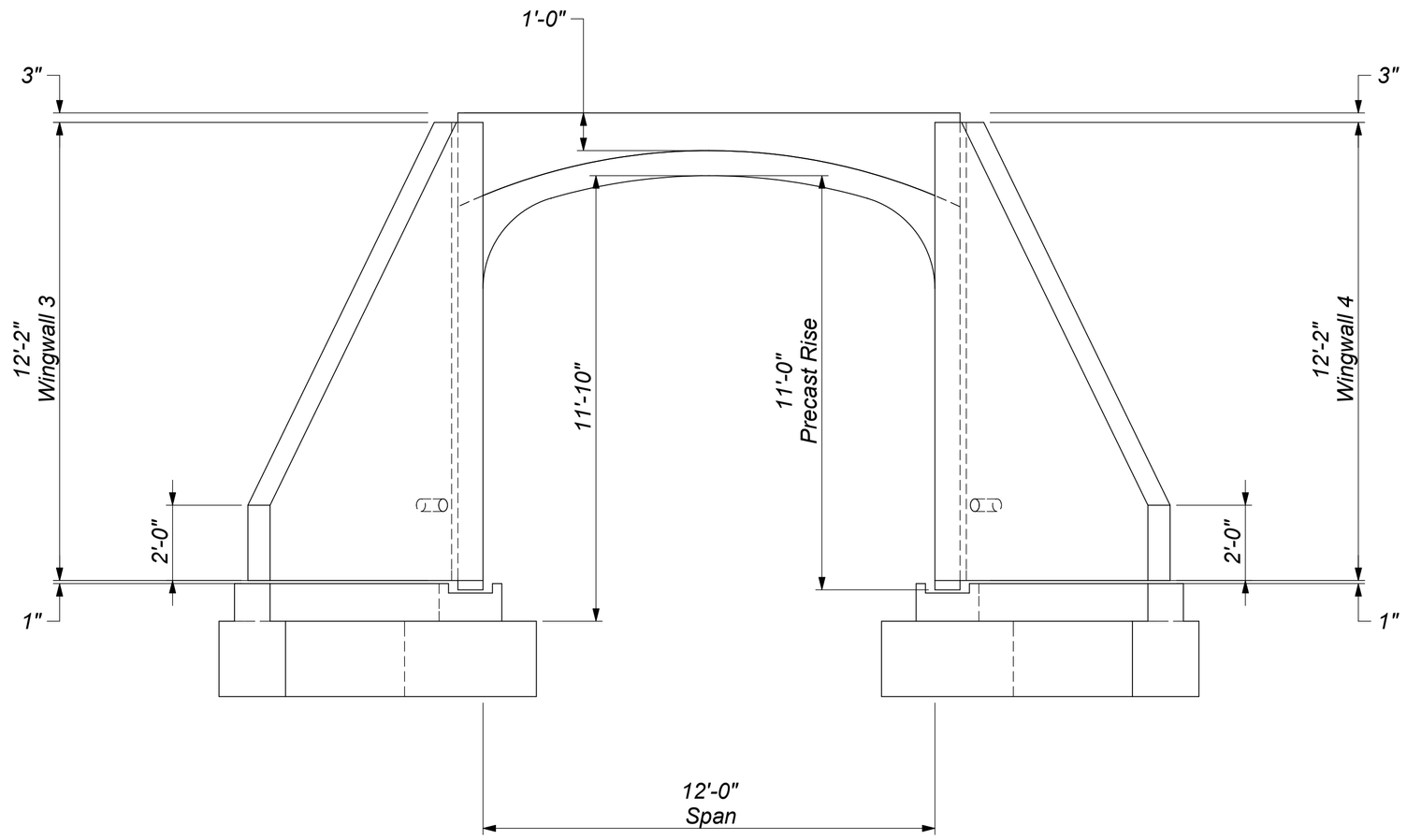

DOWNSTREAM END ELEVATION

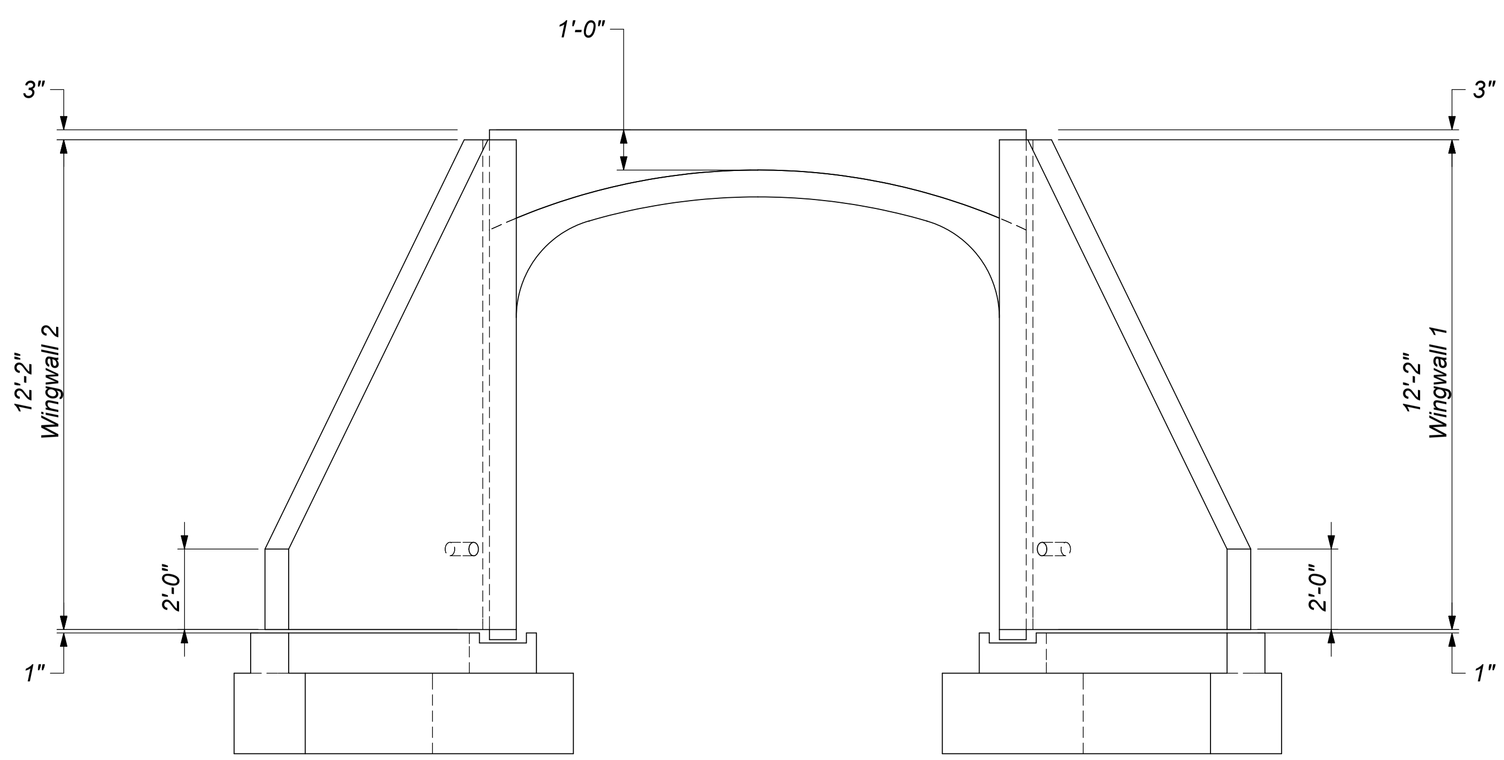

UPSTREAM END ELEVATION

NOTICE
©2006. The design and information shown on this drawing is provided as a service to the project owner, engineer and contractor by CONTECH Arch Technologies, Inc. No part of this drawing may be used, reproduced or modified in any manner without the prior written authorization of CONTECH Arch Technologies, Inc. Any such use, reproduction or modification of this drawing is done at the user's own risk and the user agrees to indemnify, defend and hold harmless CONTECH Arch Technologies, Inc. from any and all claims, liability and expenses, including, but not limited to, reasonable attorney's fees arising from such use, reproduction or modification.

If discrepancies between the supplied information and actual field conditions are encountered as site work progresses, these discrepancies must be immediately brought to the attention of CONTECH Arch Technologies, Inc. immediately for review and resolution of the problem. CONTECH Arch Technologies, Inc. accepts no liability for designs based on inaccurate information supplied by others.

The CONSPAN ▸ Bridge System is protected by one or more patents, patent pending and Trademarks.

Preliminary Drawings prepared for:

Tara

Anderson

CONSPAN® BRIDGE SYSTEMS
3100 Research Blvd. P.O. Box 20266 Dayton, Ohio 45420-02366
Phone: (800) 526-3999 Fax: 937-254-8365
www.con-span.com

Precast ConSpan Underpass

Peavine Trail

Date: 08/11/09

DYOB No. 127020

Sheet No. **3**

12550 W Butler Dr.
El Mirage, AZ 85335
PHONE (602) 206-2076
FAX (623) 935-6100
www.contechbridge.com

TO: Lyon Engineering
DATE: 8/11/09
PROJECT: Peavine Trail
RE: Multi-Plate Underpass Option

The following is an **engineer's estimate** of construction materials and installation. A formal quotation can be issued after obtaining additional details about the project.

CULVERT *Contractor to unload, set, and bolt structure together.*

(1) – 24' x 12' Multi-Plate Arch, 7 gage, 80 lf: ***$39,944***

Items included in Multi-Plate Price

- *Multi-Plate Arch*
- *Bolts*
- *Freight to job site*
- *Plate layout drawings for installation*

Installation of Multi-Plate system: ***estimated $22,500***

- *Initial excavation and backfill*
- *Bolting together Multi-Plate culvert*
- *Pouring concrete footings*

Respectfully submitted,

Tara Anderson
Project Consultant

PROJECT PROFILE

CONTECH STRUCTURAL PLATE

Gale Ranch Development
San Ramon, California

Project Team Members

- Owner: Shapell Industries
- Engineer: Ruggeri, Jensen & Azar
- Contractor: Independent Construction

Project Description

This MULTI-PLATE® structure was installed under Bolinger Canyon Road for The Bridges golf course at the Gale Ranch development in San Ramon. The high end community includes custom homes, apartments, townhomes and condos, and the prestigious world-class golf course.

After reviewing several options for the structure, Shapell Industries and Ruggeri, Jensen & Azar found that a custom MULTI-PLATE structure would best suit their needs. The unique underpass includes a small break for sunlight in the median of the four-lane road above.

CONTECH also supplied over 100,000 square feet of Keystone® retaining walls, reinforced with Tensar® Geogrid. Additional structures on the site include several multi-cell SUPER-SPAN™ structures as well as Continental® pedestrian truss bridges.

Technical Description

- Span: 24 ft 6 in
- Rise: 17 ft 10 in
- Length: 298 ft
- Product: MULTI-PLATE
- Installation Date: 1997

CONTECH® BRIDGE SOLUTIONS INC.
www.contechbridge.com • Phone: 800-526-3999

© 2007 CONTECH Bridge Solutions Inc.

Peavine Trail

Downstream

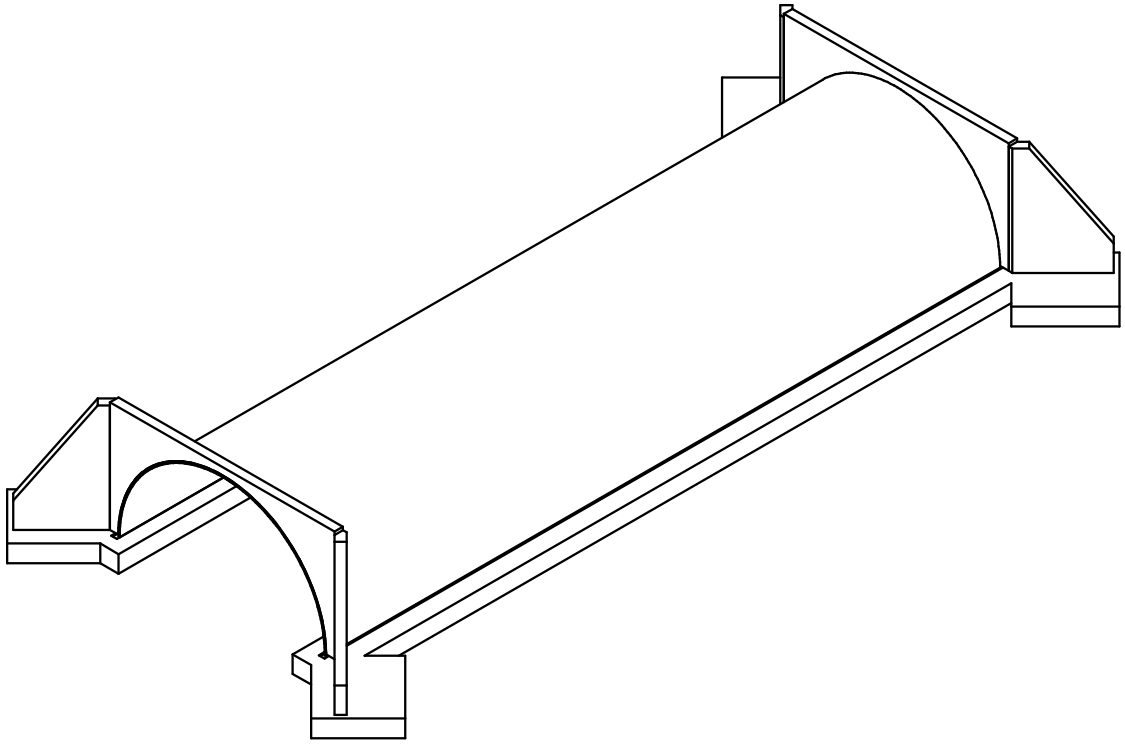

Upstream

ISOMETRIC VIEW

NOTICE
© 2008, The design and information shown on this drawing is provided as a service to the project owner, engineer and contractor by CONTECH Bridge Solutions Inc. No part of this drawing may be used, reproduced, or modified in any manner without the prior written authorization of CONTECH Bridge Solutions Inc. Any such use, reproduction, or modification of this drawing is done at the user's own risk.

If discrepancies between the supplied information and actual field conditions are encountered as site work progresses, these discrepancies must be reported to CONTECH Bridge Solutions Inc., immediately for re-evaluation of the design. CONTECH Bridge Solutions Inc. accepts no liability for designs based on inaccurate information supplied by others.

Level	Date:	Description:	By:

CONTECH® BRIDGE SOLUTIONS INC.
3100 Research Blvd. P O Box 20266 Dayton, Ohio 45420
937-254-2233 800-526-3999 937-254-8365 fax

CONTECH Product:
CONTECH® STRUCTURAL PLATE

Peavine Trail

Project Status:
PRELIMINARY
NOT FOR CONSTRUCTION

Preliminary Drawings prepared for:
Tara Anderson

Date:
8/11/2009

Job No.
127021

Sheet No. 1 of 4

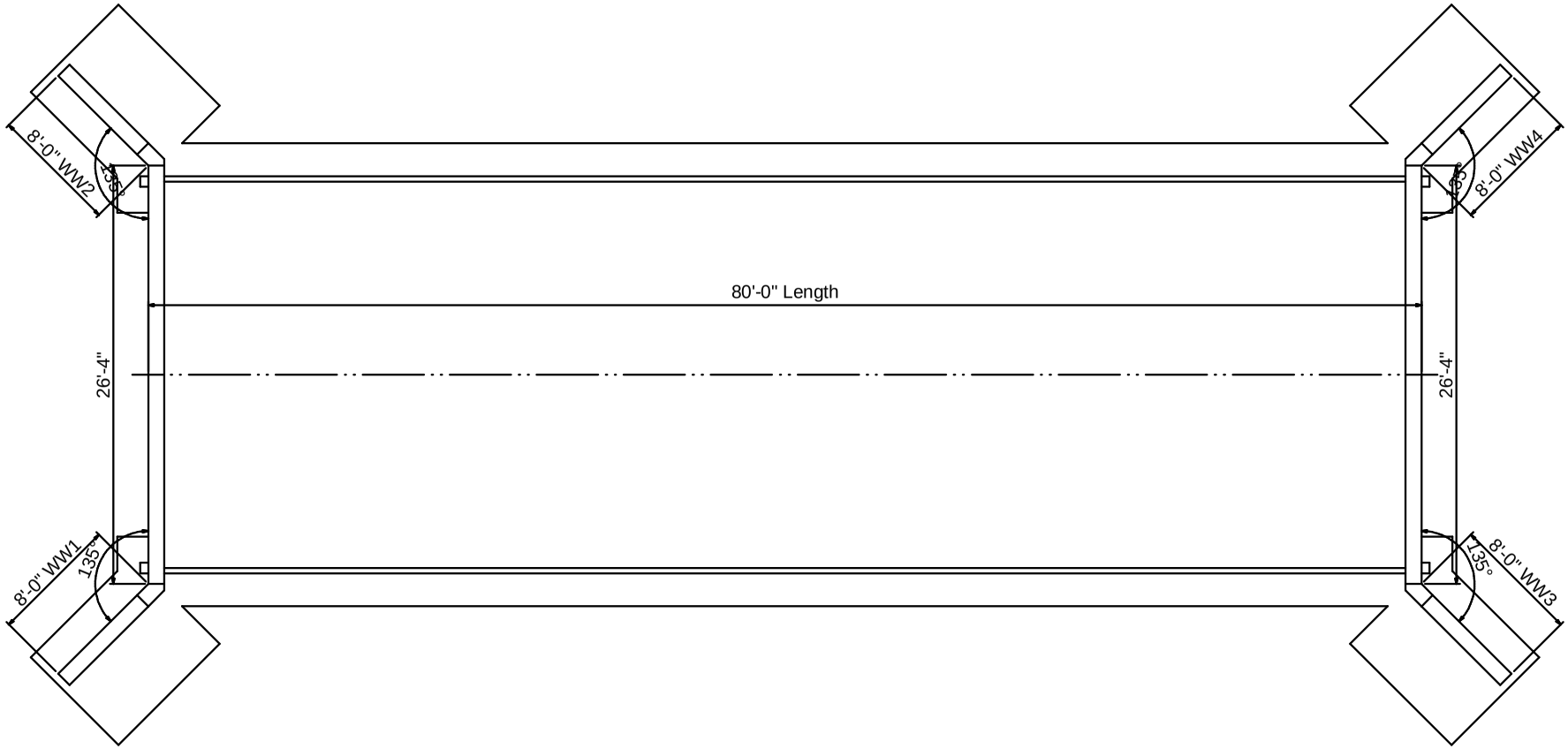

BRIDGE PLAN

NOTICE
© 2008, The design and information shown on this drawing is provided as a service to the project owner, engineer and contractor by CONTECH Bridge Solutions Inc. No part of this drawing may be used, reproduced, or modified in any manner without the prior written authorization of CONTECH Bridge Solutions Inc. Any such use, reproduction, or modification of this drawing is done at the user's own risk.

If discrepancies between the supplied information and actual field conditions are encountered as site work progresses, these discrepancies must be reported to CONTECH Bridge Solutions Inc., immediately for re-evaluation of the design. CONTECH Bridge Solutions Inc. accepts no liability for designs based on inaccurate information supplied by others.

Level	Date:	Description:	By:

CONTECH® BRIDGE SOLUTIONS INC.
3100 Research Blvd. P.O Box 20266 Dayton, Ohio 45420
937-254-2233 800-526-3999 937-254-8365 fax

CONTECH Product:
CONTECH® STRUCTURAL PLATE

Peavine Trail

Project Status:
PRELIMINARY
NOT FOR CONSTRUCTION

Preliminary Drawings prepared for:
Tara Anderson

Date:
8/11/2009

Job No.
127021

Sheet No. **2** of **4**

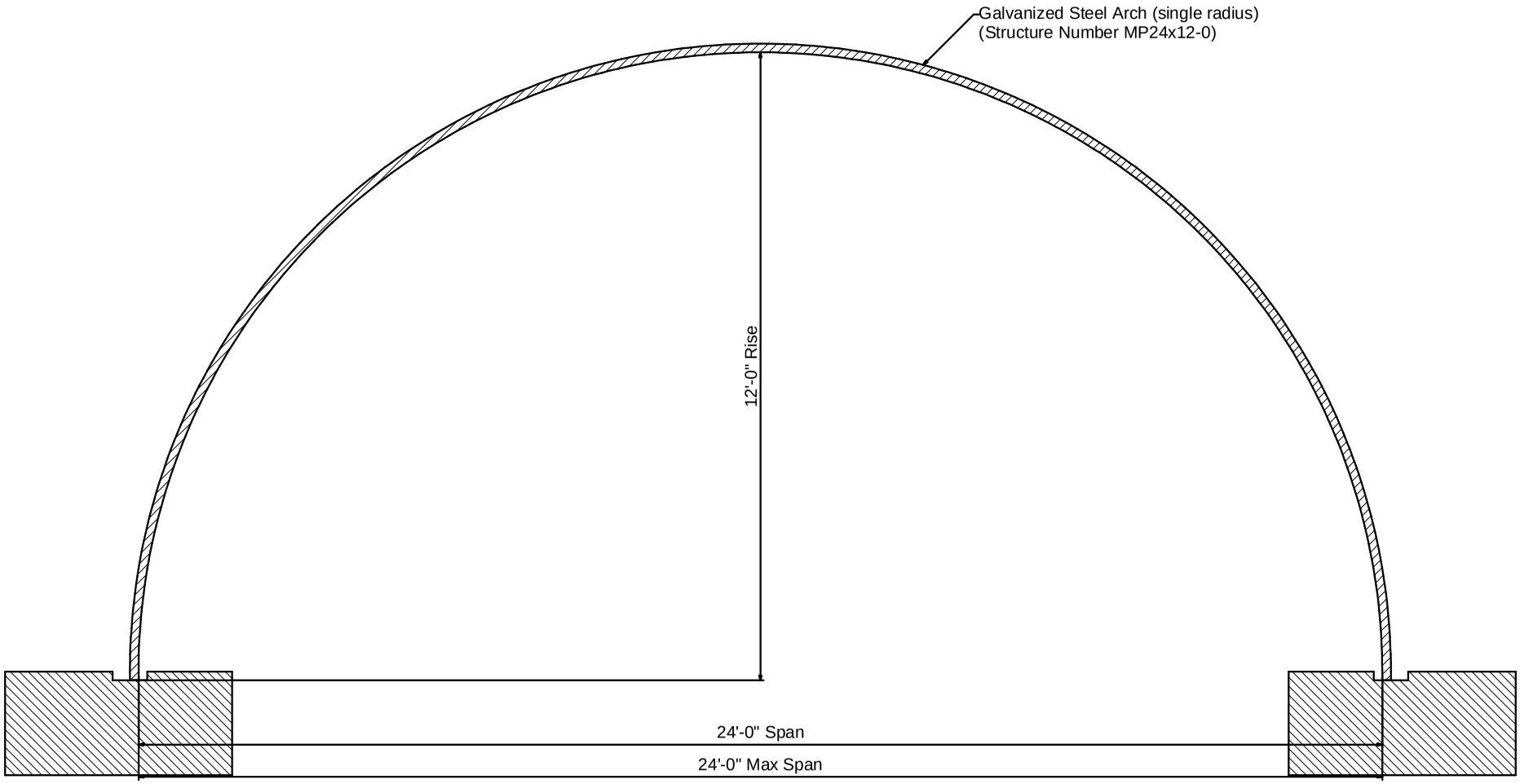

TYPICAL CROSS SECTION

NOTICE
© 2008, The design and information shown on this drawing is provided as a service to the project owner, engineer and contractor by CONTECH Bridge Solutions Inc. No part of this drawing may be used, reproduced, or modified in any manner without the prior written authorization of CONTECH Bridge Solutions Inc. Any such use, reproduction, or modification of this drawing is done at the user's own risk.

If discrepancies between the supplied information and actual field conditions are encountered as site work progresses, these discrepancies must be reported to CONTECH Bridge Solutions Inc., immediately for re-evaluation of the design. CONTECH Bridge Solutions Inc. accepts no liability for designs based on inaccurate information supplied by others.

Level	Date:	Description:	By:

CONTECH® BRIDGE SOLUTIONS INC.
3100 Research Blvd. P O Box 20266 Dayton, Ohio 45420
937-254-2233 800-526-3999 937-254-8365 fax

CONTECH Product: CONTECH® STRUCTURAL PLATE

Peavine Trail

Project Status: PRELIMINARY NOT FOR CONSTRUCTION

Preliminary Drawings prepared for: Tara Anderson

Date: 8/11/2009

Job No. 127021

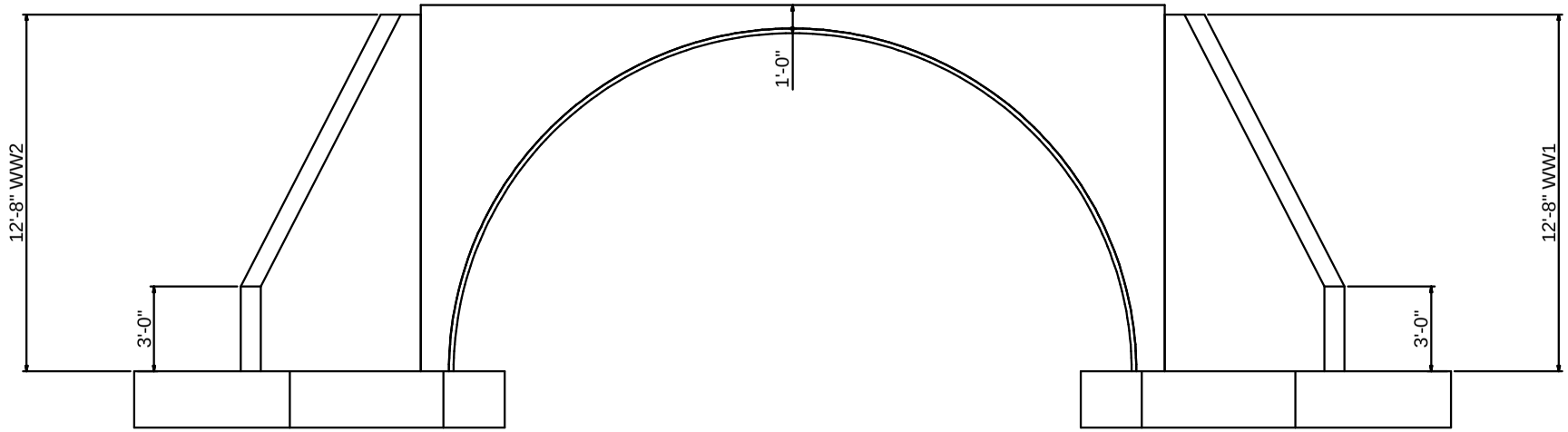

UPSTREAM END ELEVATION

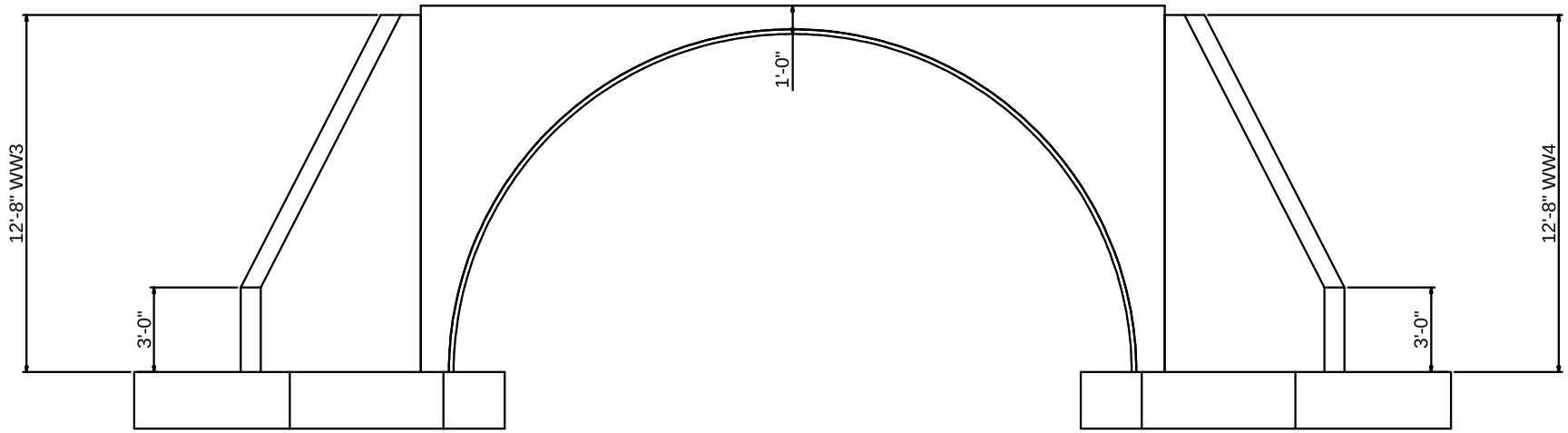

DOWNSTREAM END ELEVATION

NOTICE
© 2008, The design and information shown on this drawing is provided as a service to the project owner, engineer and contractor by CONTECH Bridge Solutions Inc. No part of this drawing may be used, reproduced, or modified in any manner without the prior written authorization of CONTECH Bridge Solutions Inc. Any such use, reproduction, or modification of this drawing is done at the user's own risk.

If discrepancies between the supplied information and actual field conditions are encountered as site work progresses, these discrepancies must be reported to CONTECH Bridge Solutions Inc., immediately for re-evaluation of the design. CONTECH Bridge Solutions Inc. accepts no liability for designs based on inaccurate information supplied by others.

Level	Date:	Description:	By:

CONTECH® BRIDGE SOLUTIONS INC.
3100 Research Blvd. P.O Box 20266 Dayton, Ohio 45420
937-254-2233 800-526-3999 937-254-8365 fax

CONTECH Product:
CONTECH® STRUCTURAL PLATE

Peavine Trail

Project Status:
PRELIMINARY
NOT FOR CONSTRUCTION

Preliminary Drawings prepared for:
Tara Anderson

Date:
8/11/2009

Job No.
127021

Sheet No. **4** of **4**

PROJECT PROFILE

SE 263rd Street Pedestrian Tunnel
Maple Valley, Washington

Project Team Members

- Owner: City of Maple Valley
- Engineer: Berryman & Henigar
- Contractor: C.W. Williams Construction Co.

Project Description

As part of Maple Valley's "Signature Street" program, a CON/SPAN® precast arch tunnel was selected to connect a new subdivision to cross an existing jogging/equestrian trail. Residents of the subdivision now have direct access to the highway, and the structure provides two new access ramps to the King County trail. The grand opening of the bridge was celebrated with a ribbon cutting ceremony.

"This new bridge helps connect the city visually and also connects people traveling by either car or by foot," said City Mayor Laure Iddings. "Visually the CON/SPAN® structure echoes the other design features that the city of Maple Valley is adopting as its visual signature...and this style will be repeated in future developments as well."

The CON/SPAN® structure includes decorative bridge railings and end columns, landscaping enhancements and ornamental light standards and benches. The simulated rock facing on the tunnel and retaining walls mimics a natural stone appearance at 70% of the cost. Installation was completed within the city's deadline and budget.

Technical Description

- Span: 16 ft
- Rise: 10 ft
- Overall Length: 44.2 ft
- Installation Date: November 12, 2003

www.contechbridge.com • Phone: 800-526-3999

© 2006 CONTECH Bridge Solutions Inc.

APPENDIX F

COST ESTIMATE

Option 1 - Peavine Trail and Road 39 - At-Grade Crossing

Engineer's Opinion of Probable Construction Cost

ITEM NUMBER	ITEM DESCRIPTION	ESTIMATED QUANTITY	UNIT	UNIT COST	TOTAL ITEM COST
	CROSSING COMPONENTS				
1	VERTICAL CURB AND GUTTER-ROAD 39 ISLAND	446	LF	18.00	8,028
2	ISLAND LANDSCAPING (ROCK/FILTER FABRIC)	1	LS	1,000.00	1,000
3	SIDEWALK RAMP WITH DETECTABLE WARNINGS	2	EA	2,000.00	4,000
4	STREET LIGHTS	2	EA	12,000.00	24,000
5	CONDUIT AND LOCKABLE PULL BOX	1	LS	400.00	400
6	STRIPING	1	LS	1,000.00	1,000
				SUBTOTAL=	**$38,428**
	TEMPORARY EROSION CONTROL / EARTHWORK				
7	SILT FENCE	0	LF	3.50	0
8	TEMPORARY GRAVEL ENTRANCE	0	EA	3,000.00	0
9	BIO-WATTLE	0	LF	3.00	0
10	CUT/FILL	31	CY	3.00	93
				SUBTOTAL=	**$93**
	PERMANENT EROSION CONTROL				
11	HAND-PLACED RIP-RAP	0	SY	30.00	0
12	PRESCOTT NATIVE HYDROSEED MIX (SLOPES)	0.0	AC	1,500.00	0
SUBTOTAL=					**$0**

SUBTOTAL=	38,521
20% CONTINGENCY=	7,704
GRAND TOTAL=	**$46,225**

Option 2 - Peavine Trail and Road 39 - Overpass Crossing

Engineer's Opinion of Probable Construction Cost

ITEM NUMBER	ITEM DESCRIPTION	ESTIMATED QUANTITY	UNIT	UNIT COST	TOTAL ITEM COST
	CROSSING COMPONENTS				
1	BRIDGE (100' X 12')	1	EA	69,500.00	69,500
2	BRIDGE INSTALLATION - COMPLETE	1	LS	60,000.00	60,000
3	LIGHTING FOR BRIDGE	1	LS	2,500.00	2,500
4	STREET LIGHTS	2	EA	12,000.00	24,000
5	VERTICAL CURB AND GUTTER-ROAD 39 ISLAND	102	LF	18.00	1,836
6	ISLAND LANDSCAPING (ROCK/FILTER FABRIC)	1	LS	500.00	500
7	HANDRAIL - APPROACHES	905	LF	40.00	36,200
8	SIDEWALK RAMPS WITH DETECTABLE WARNINGS	2	EA	2,000.00	4,000
9	12' WIDE BYPASS ROAD - EQUESTRIAN AND MAINTENANCE ACCESS	1,010	LF	20.00	20,200
10	CONDUIT AND LOCKABLE PULL BOX	1	LS	400.00	400
11	36" HDPE (BEYOND WHAT IS REQUIRED FOR G.D.E. PH.1A)	186	LF	70.00	13,020
12	BOLLARDS/ACCESS GATE	1	LS	500.00	500
13	STRIPING	1	LS	1,000.00	1,000
				SUBTOTAL=	**$233,656**
	TEMPORARY EROSION CONTROL / EARTHWORK				
14	SILT FENCE	2,340	LF	3.50	8,190
15	TEMPORARY GRAVEL ENTRANCE	2	EA	3,000.00	6,000
16	BIO-WATTLE	100	LF	3.00	300
17	CUT/FILL	14,900	CY	3.00	44,700
				SUBTOTAL=	**$59,190**
	PERMANENT EROSION CONTROL				
18	HAND-PLACED RIP-RAP	0	SY	30.00	0
19	PRESCOTT NATIVE HYDROSEED MIX (SLOPES)	1.0	AC	1,500.00	1,500
SUBTOTAL=					**$1,500**

SUBTOTAL=	294,346
20% CONTINGENCY=	58,869
GRAND TOTAL=	**$353,215**

Option 3 - Peavine Trail and Road 39 - Underpass Crossing - Road 39 Raised

Engineer's Opinion of Probable Construction Cost

ITEM NUMBER	ITEM DESCRIPTION	ESTIMATED QUANTITY	UNIT	UNIT COST	TOTAL ITEM COST
	CROSSING COMPONENTS				
1	BOX CULVERT (12' X 12' X 87')	1	EA	86,400.00	86,400
2	BOX CULVERT INSTALLATION - COMPLETE	1	LS	52,000.00	52,000
3	LIGHTING FOR BOX CULVERT	1	LS	2,500.00	2,500
4	36" HDPE (BEYOND WHAT IS REQUIRED FOR G.D.E. PH.1A)	295	LF	70.00	20,650
5	18" HDPE (BEYOND WHAT IS REQUIRED FOR G.D.E. PH.1A)	217	LF	38.00	8,246
6	LAND ACQUISTION	0.71	AC	40,000.00	28,400
7	REDESIGN OF GRANITE DELLS ESTATES	1	LS	4,400.00	4,400
				SUBTOTAL=	**$202,596**
	TEMPORARY EROSION CONTROL / EARTHWORK				
8	SILT FENCE	2,236	LF	3.50	7,826
9	TEMPORARY GRAVEL ENTRANCE	2	EA	3,000.00	6,000
10	BIO-WATTLE	30	LF	3.00	90
11	CUT/FILL	33,340	CY	3.00	100,020
				SUBTOTAL=	**$113,936**
	PERMANENT EROSION CONTROL				
12	HAND-PLACED RIP-RAP	13	SY	30.00	390
13	PRESCOTT NATIVE HYDROSEED MIX (SLOPES)	2.0	AC	1,500.00	3,000
SUBTOTAL=					**$3,390**

SUBTOTAL=	319,922
20% CONTINGENCY=	63,984
GRAND TOTAL=	**$383,906**

Option 4 - Peavine Trail and Road 39 - Alternate Location Underpass Crossing

Engineer's Opinion of Probable Construction Cost

ITEM NUMBER	ITEM DESCRIPTION	ESTIMATED QUANTITY	UNIT	UNIT COST	TOTAL ITEM COST
	CROSSING COMPONENTS				
1	BOX CULVERT (12' X 12' X 98')	1	EA	97,800.00	97,800
2	BOX CULVERT INSTALLATION - COMPLETE	1	LS	52,000.00	52,000
3	LIGHTING FOR BOX CULVERT	1	LS	2,500.00	2,500
4	LAND ACQUISTION	2.90	AC	40,000.00	116,000
5	REDESIGN OF GRANITE DELLS ESTATES	1	LS	13,200.00	13,200
				SUBTOTAL=	**$281,500**
	TEMPORARY EROSION CONTROL / EARTHWORK				
6	SILT FENCE	2,427	LF	3.50	8,495
7	TEMPORARY GRAVEL ENTRANCE	2	EA	3,000.00	6,000
8	BIO-WATTLE	520	LF	3.00	1,560
9	CUT/FILL	17,670	CY	3.00	53,010
				SUBTOTAL=	**$69,065**
	PERMANENT EROSION CONTROL				
10	HAND-PLACED RIP-RAP	0	SY	30.00	0
11	PRESCOTT NATIVE HYDROSEED MIX (SLOPES)	1.0	AC	1,500.00	1,500
SUBTOTAL=					**$1,500**

SUBTOTAL=	352,065
20% CONTINGENCY=	70,413
GRAND TOTAL=	**$422,477**

Option 5 - Peavine Trail and Road 39 - Underpass Crossing - Road 39 at Designed Grade

Engineer's Opinion of Probable Construction Cost

ITEM NUMBER	ITEM DESCRIPTION	ESTIMATED QUANTITY	UNIT	UNIT COST	TOTAL ITEM COST
	CROSSING COMPONENTS				
1	BOX CULVERT (12' X 12' X 98')	1	EA	97,800.00	97,800
2	BOX CULVERT INSTALLATION - COMPLETE	1	LS	52,000.00	52,000
3	LIGHTING FOR BOX CULVERT	1	LS	2,500.00	2,500
4	STREET LIGHTS	2	EA	12,000.00	24,000
5	VERTICAL CURB AND GUTTER-ROAD 39 ISLAND	102	LF	18.00	1,836
6	ISLAND LANDSCAPING (ROCK/FILTER FABRIC)	1	LS	500.00	500
7	WET WELL AND PUMPS TO CONVEY DRAINAGE	1	LS	250,000.00	250,000
8	SIDEWALK RAMP WITH DECTECTABLE WARNINGS	2	EA	2,000.00	4,000
9	12' WIDE BYPASS ROAD - EQUESTRIAN AND MAINTENANCE ACCESS	922	LF	20.00	18,440
10	BOLLARDS/ACCESS GATE	1	LS	500.00	500
11	STRIPING	1	LS	1,000.00	1,000
				SUBTOTAL=	**$452,576**
	TEMPORARY EROSION CONTROL / EARTHWORK				
12	SILT FENCE	0	LF	3.50	0
13	TEMPORARY GRAVEL ENTRANCE	2	EA	3,000.00	6,000
14	BIO-WATTLE	1,380	LF	3.00	4,140
15	CUT/FILL	11,320	CY	3.00	33,960
				SUBTOTAL=	**$44,100**
	PERMANENT EROSION CONTROL				
16	HAND-PLACED RIP-RAP	0	SY	30.00	0
17	PRESCOTT NATIVE HYDROSEED MIX (SLOPES)	1.0	AC	1,500.00	1,500
SUBTOTAL=					**$1,500**

SUBTOTAL=	498,176
20% CONTINGENCY=	99,635
GRAND TOTAL=	**$597,811**

APPENDIX G

MUTCD EXHIBIT

Figure 9B-3. Typical Signs and Markings for Shared-Use Paths

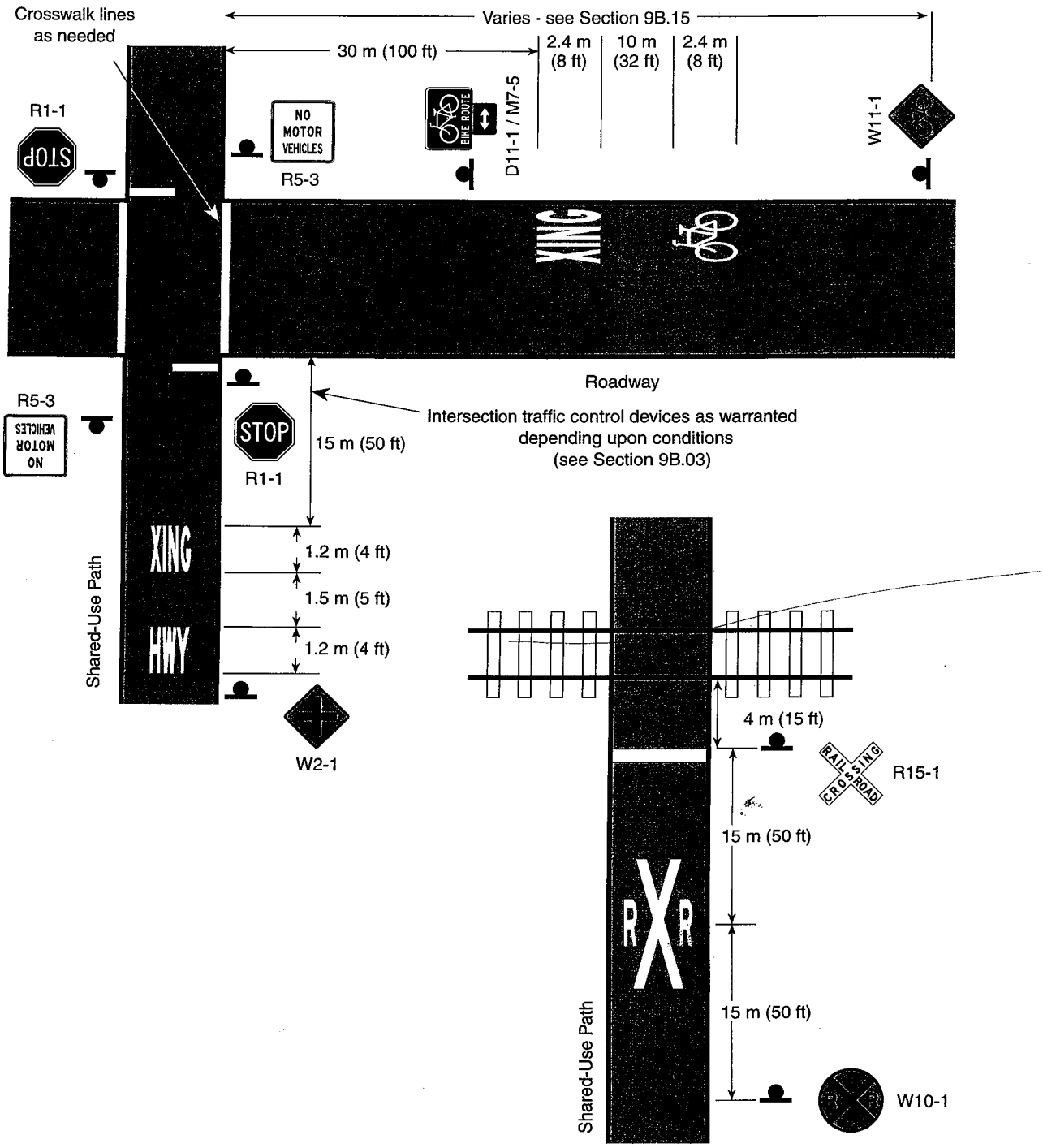

Table 2C-4. Guidelines for Advance Placement of Warning Signs
(English Units)

Posted or 85th-Percentile Speed	Advance Placement Distance [1]						
	Condition A: High judgment required[2]	Condition B: Stop condition[3]	Condition C: Deceleration to the listed advisory speed (mph) for the condition[4]				
			10	20	30	40	50
20 mph	175 ft	N/A[5]	N/A[5]	—	—	—	—
25 mph	250 ft	N/A[5]	100 ft	N/A[5]	—	—	—
30 mph	325 ft	100 ft	150 ft	100 ft	—	—	—
35 mph	400 ft	150 ft	200 ft	175 ft	N/A[5]	—	—
40 mph	475 ft	225 ft	275 ft	250 ft	175 ft	—	—
45 mph	550 ft	300 ft	350 ft	300 ft	250 ft	N/A[5]	—
50 mph	625 ft	375 ft	425 ft	400 ft	325 ft	225 ft	—
55 mph	700 ft	450 ft	500 ft	475 ft	400 ft	300 ft	N/A[5]
60 mph	775 ft	550 ft	575 ft	550 ft	500 ft	400 ft	300 ft
65 mph	850 ft	650 ft	650 ft	625 ft	575 ft	500 ft	375 ft

Notes:

[1] The distances are adjusted for a sign legibility distance of 50 m (175 ft) which is the appropriate legibility distance for a 125 mm (5 in) Series D word legend. The distances may be adjusted by deducting another 30 m (100 ft) if symbol signs are used. Adjustments may be made for grades if appropriate.

[2] Typical conditions are locations where the road user must use extra time to adjust speed and change lanes in heavy traffic because of a complex driving situation. Typical signs are Merge, Right Lane Ends, etc. The distances are determined by providing the driver a PIEV time of 6.7 to 10.0 seconds plus 4.5 seconds for vehicle maneuvers minus the legibility distance of 50 m (175 ft) for the appropriate sign.

[3] Typical condition is the warning of a potential stop situation. Typical signs are Stop Ahead, Yield Ahead, or Signal Ahead. The distances are based on the 1990 AASHTO Policy for stopping sight distance (page 120) providing a PIEV time of 2.5 seconds, friction factor of 0.30 to 0.40, minus the sign legibility distance of 50 m (175 ft).

[4] Typical conditions are locations where the road user must decrease speed to maneuver through the warned condition. Typical signs are Turn, Curve, or Cross Road. The distance is determined by providing a 1.6 second PIEV time (1990 AASHTO, page 119), a vehicle deceleration rate of 3 m/second^2 (10 ft/second^2), minus the sign legibility distance of 50 m (175 ft).

[5] No suggested minimum distances are provided for these speeds, as placement location is dependent on site conditions and other signing to provide an adequate advance warning for the driver.

APPENDIX H

ROAD 39 TRAFFIC VOLUMES

- ORIGINAL DATA PROVIDED BY CTE, LLC ON JANUARY 22, 2009-TRAFFIC IMPACT ANALYSIS REPORT FOR GDE BUSINESS INDUSTRIAL DEVELOPMENT
- HANDWRITTEN COMMENTS PROVIDED LYON ENGINEERING

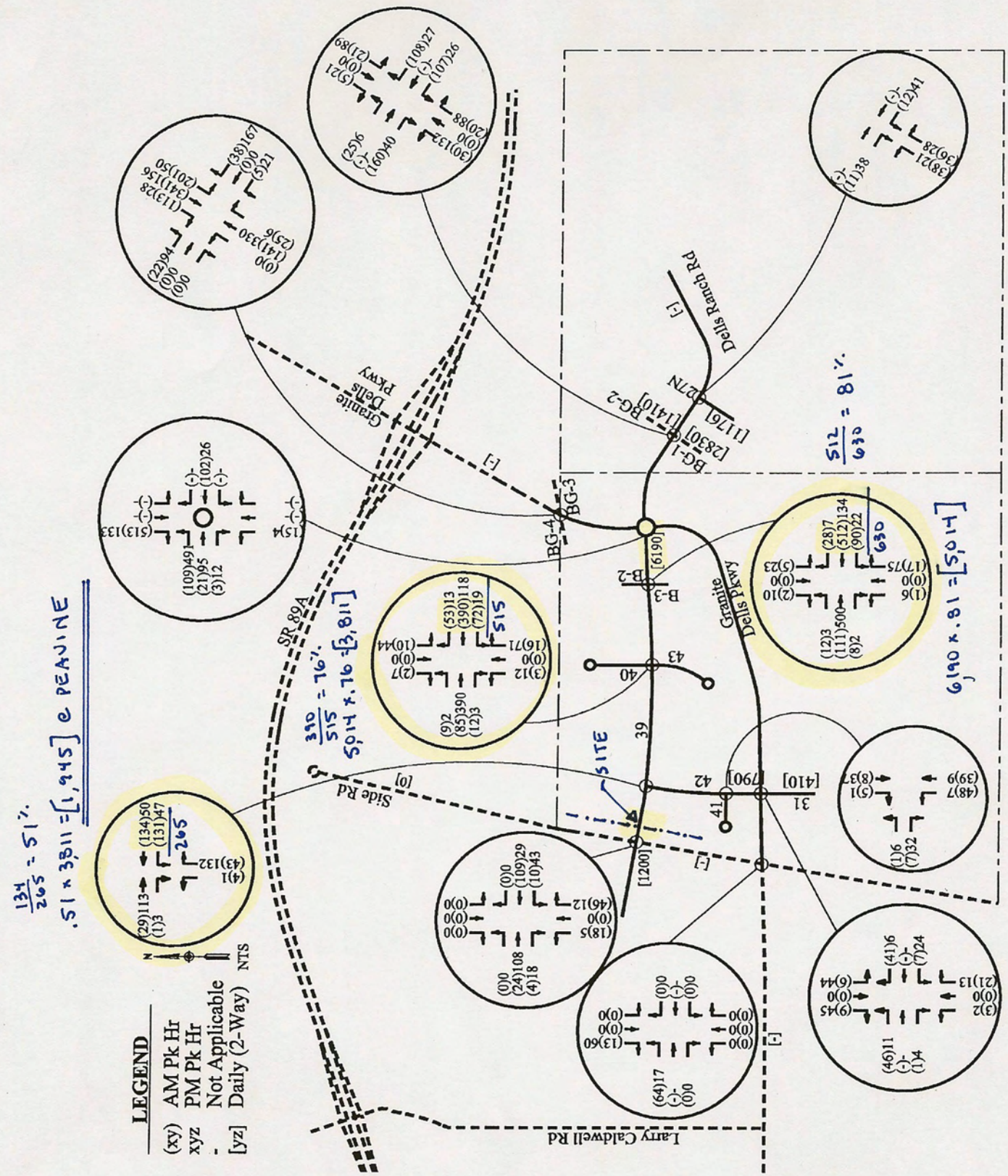

GDE Business Industrial Development Traffic Forecast

Figure 5.2

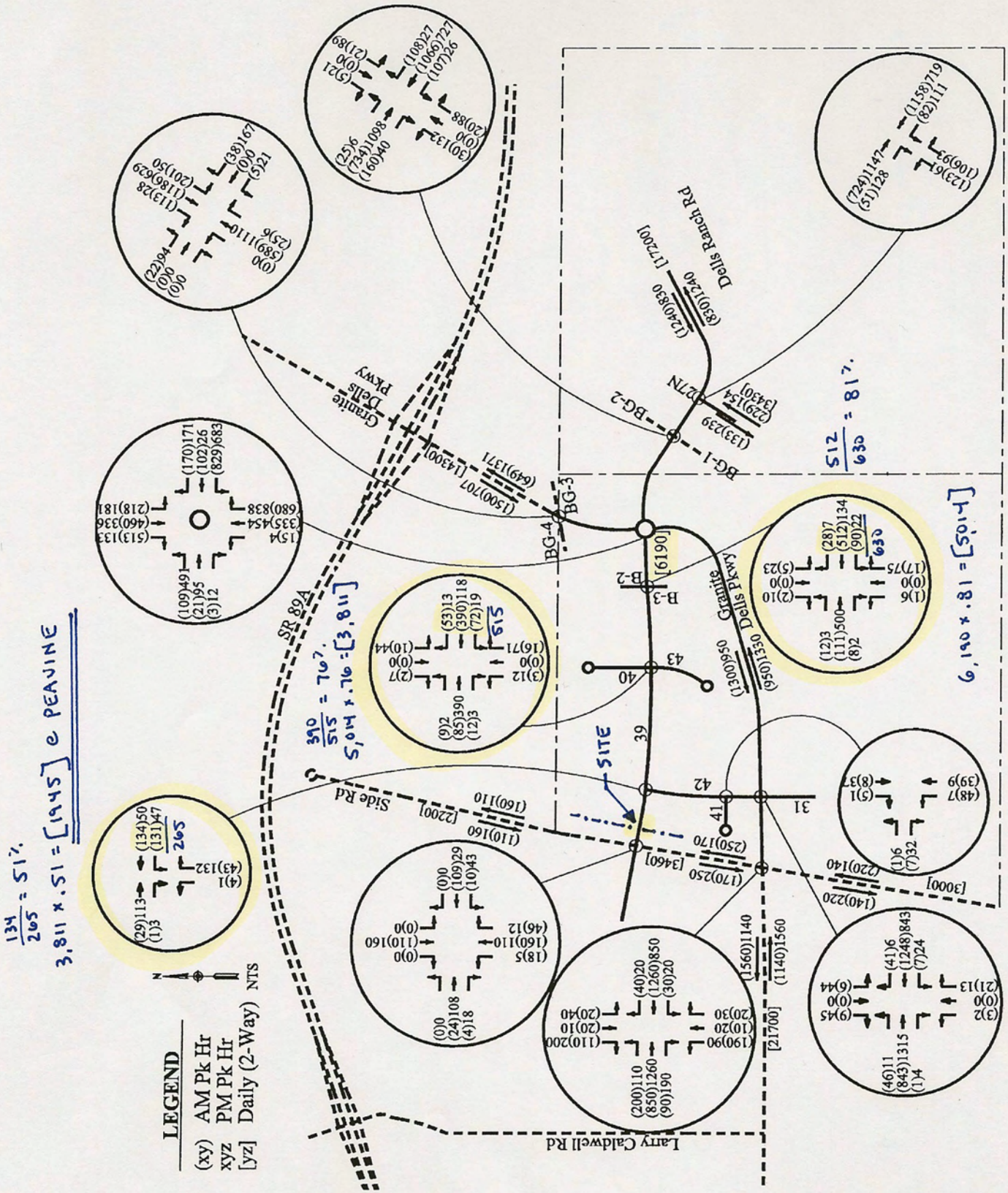

2030 Combined Total Traffic Forecast

Figure 5.3

APPENDIX I

GEOTECHNICAL ANALYSIS

August 7, 2009

ENGINEERING & TESTING CONSULTANTS, INC.

Mr. Scott Lyon
Lyon Engineering & Development, Inc.
3623 Crossings Drive
Prescott, Arizona 86305

SUBJECT: LIMITED GEOTECHNICAL INVESTIGATION FOR PEAVINE TRAIL PEDESTRIAN CROSSING, PRESCOTT, ARIZONA

Dear Mr. Lyon:

As requested, Engineering & Testing Consultants, Inc., (ETC) has completed a preliminary geotechnical soil investigation for the above referenced project.

The purpose of this exploration is for the development of concepts for alternative configurations for the proposed Peavine Tail crossing at Road 39. We understand that, at this time, alternative concepts include a box culvert underpass, pedestrian bridge overpass, and an at grade crossing. A final report, and possibly additional test borings, will be required after the proposed type of crossing has been determined.

GENERAL SITE CONDITIONS

The subject site is generally located along the proposed alignment of Road 39, on the old Santa Fe Railroad alignment, approximately 500 feet south of the end of pavement of Side Road. Currently, Peavine Tail has been constructed with approximately 6 to 7 feet of fill at this location, and a concrete drainage culvert is located beneath the trail in this area. The fill slopes on the sides of the trail are relatively steep.

The general location of the crossing was marked in the field. The exploratory test boring was drilled near the eastern side of the trail, several feet north of the existing concrete culvert.

The boring encountered approximately 7.5 feet of existing fill material. The existing fill consists of 2 feet of cinders, or low plasticity, brown, silty, clayey sand with gravel (USCS Classification SM-SC). The upper cinders are underlain by moderate plasticity, dark brown, damp, medium dense, clayey sand (SC) with a high clayey fines content and some gravel.

At a depth of approximately 7.5 feet below existing trail grade, the fill was underlain by native soil consisting of brown, moist, medium dense, clayey sand (SC) with some gravel and an occasional cobble. At a depth of 16 feet, very dense clayey gravel (GC) with sand and cobbles was encountered to depths explored, approximately 18 feet below existing grade.

Standard penetration testing (SPT) was performed in the field by driving a standard split spoon sampler in general accordance with ASTM D-1586 specifications. The penetration resistance of the soil, or N-values, represents the number of blows required to drive the split barrel sampler 6 to 18 inches into the soil at the bottom of the borehole using a 140-pound hammer falling 30 inches. These blow counts are a relative indicator of the soil strength and density.

A more detailed description of the subsurface soils encountered is provided on the boring log included in Appendix A. A boring location map is presented as Figure 1.

LABORATORY

Atterberg limits, gradation, and moisture content laboratory tests were performed for a representative soil sample of the railroad fill material, collected during the drilling operation. Laboratory testing was performed in accordance with applicable ASTM standards. A summary of the laboratory test results is presented below in Table 1.

TABLE 1
SUMMARY OF LABORATORY TEST RESULTS

Depth (feet)	Liquid Limit (%)	Plasticity Index	Moisture Content (%)	Fines Content (%)	Gravel Content (%)	Unified Soil Classification
5 – 7	32	13	8.8	46	2	SC

As shown in Table 1, the soil tested is granular, consisting of 54 percent sand and gravel. However, the soil contains a significant percentage of low to moderate plasticity fines.

RECOMMENDATIONS

For construction of the roadway and trail crossing, the existing railroad fill material will require removal and replacement in controlled, compacted lifts. Fill slopes shall be constructed at a maximum slope angle of 2H:1V.

The underlying, native soils, encountered at a depth of approximately 7.5 feet, were found to be adequate for support of typical foundation loads and box culvert structures.

For preliminary foundation design, ETC recommends that conventional shallow foundations be seated in firm native soil and/or adequately compacted engineered fill, ETC recommends a maximum allowable foundation pressure of **2,500 psf** be used for design. Foundations should be seated at a minimum depth of **24 inches** below lowest, adjacent, finished grade.

The areas where fill is required must be stripped of all vegetation, debris, existing fill, or other unstable soils and such material should be removed. Depressions and sloped ground should be widened or benched as necessary to accommodate compaction equipment and provide a level base for fill placement.

The exposed ground surface shall be scarified, moisture conditioned, and compacted to a minimum depth of 8 inches prior to placing fill. All subbase fill required to bring the structured areas up to subgrade elevation shall be placed in horizontal lifts not exceeding 8 inches compacted thickness. All fill soils should be compacted to a minimum relative density of 95% maximum dry density at –2% to +2% of optimum moisture content, ASTM D698.

Subgrade soils within the roadway area shall be in conformance with the minimum required subgrade criteria specified in our soils report for Granite Dells Estates (ETC File No. 7177).

ETC recommends the observation of the site grading operation with sufficient tests to verify proper compaction.

LIMITATIONS

The figures and recommendations in this report were prepared in accordance with accepted professional engineering principles and soil mechanics practices. We make no other warranty, either implied or expressed. ETC shall be contacted to complete a final report, and possibly additional test borings, after the proposed type of crossing has been determined.

This report is not a bidding document. Any contractor reviewing this report must draw his own conclusions regarding site conditions and specific construction techniques to be used on this project. ETC has not reviewed building or grading plans for the proposed construction.

For your use. Should you have any questions or concerns, please contact us at (928) 778-9001.

Sincerely,

ENGINEERING & TESTING CONSULTANTS, INC.

Registered Professional Engineer (Civil)
CERTIFICATE NO.
37900
MICHAEL PHILIP
WILSON
Date Signed 8/7/09
ARIZONA, U.S.A.

Expires 09/30/11

Michael P. Wilson, P.E.
Project Engineer

Attachment: Figure 1 & Appendix A

cc: ETC File 7366

FIGURE 1

BORING LOCATION MAP

Legend

Approximate Boring Location

N

Engineering & Testing Consultants, Inc. •Subsurface Drilling •Geotechnical •Environmental Support	**FIGURE 1** **BORING LOCATION MAP**	ETC
Drawn by: others Date: 07/30/09 Project No: ETC 7366 Page No:	Peavine Trail Pedestrian Crossing Prescott, Arizona	

APPENDIX A

FIELD EXPLORATION

GENERAL NOTES

DESCRIPTIVE SOIL CLASSIFICATION:

Soil Classification is based on the Unified Soil Classification System and ASTM Designations D-2487 and D-2488. Coarse Grained Soils have more than 50% of their dry weight retained on a #200 sieve; they are described as: boulders, cobbles, gravel or sand. Fine grained soils have less than 50% of their dry weight retained on a #200 sieve; they are described as: Clays, if they are plastic, and silts if they are slightly plastic or non-plastic. Major constituents may be added as modifiers and minor constituents may be added according to the relative proportions based on grain size. In addition to gradation, coarse grained soils are defined on the basis of their relative in-place density and fine grained soils on the basis of their consistency. Example: Lean clay with sand, trace gravel, stiff (CL); silty sand, trace gravel, medium dense (SM).

CONSISTENCY OF FINE-GRAINED SOILS:

N-Blows/ft.	Consistency
0-2	Very Soft
3-4	Soft
5-8	Medium
9-16	Stiff
17-32	Very Stiff
33+	Hard

RELATIVE DENSITY OF COARSE-GRAINED SOILS:

N-Blows/ft.	Relative Density
0-3	Very Loose
4-9	Loose
10-29	Medium Dense
30-49	Dense
50+	Very Dense

RELATIVE PROPORTIONS OF SAND AND GRAVEL:

Description Term(s) (of Components Also Present in Sampling)	Percent of Dry Weight
Trace	< 15
With	15 - 29
Modifier	> 30

GRAIN SIZE TERMINOLOGY:

Major Component of Sampling	Size Range
Boulders	Over 12 in. (300mm)
Cobbles	12 in. to 3 in. (300mm to 75mm)
Gravel	3 in. to #4 sieve (75mm to 4.75mm)
Sand	#4 to #200 sieve (4.75mm to 0.075mm)
Silt or Clay	Passing #200 sieve (0.075mm)

RELATIVE PROPORTIONS OF FINES:

Description Term(s) (of Components Also Present in Sampling)	Percent of Dry Weight
Trace	< 5
With	5 - 12
Modifier	> 12

UNIFIED SOIL CLASSIFICATION SYSTEM*

				Soil Classification	
				Group Symbol	Group Name [B]
COARSE-GRAINED SOILS More than 50 % retained on No. 200 sieve	Gravels More than 50 % of coarse fraction retained on No. 4 sieve	Clean Gravels Less than 5 % fines [C]	$Cu \geq 4$ and $1 \leq Cc \leq 3$ [E]	GW	Well-graded gravel [F]
			$Cu < 4$ and/or $1 > Cc > 3$ [E]	GP	Poorly graded gravel [F]
		Gravels with Fines More than 12 % fines [C]	Fines classify as ML or MH	GM	Silty gravel [F,G,H]
			Fines classify as CL or CH	GC	Clayey gravel [F,G,H]
	Sands 50 % or more of coarse fraction passes No. 4 sieve	Clean Sands Less than 5 % fines [D]	$Cu \geq 6$ and $1 \leq Cc \leq 3$ [E]	SW	Well-graded sand [I]
			$Cu < 6$ and/or $1 > Cc > 3$ [E]	SP	Poorly graded sand [I]
		Sands with Fines More than 12 % fines [D]	Fines classify as ML or MH	SM	Silty sand [G,H,I]
			Fines classify as CL or CH	SC	Clayey sand [G,H,I]
FINE-GRAINED SOILS 50 % or more passes the No. 200 sieve	Silts and Clays Liquid limit less than 50	inorganic	PI > 7 and plots on or above "A" line [J]	CL	Lean clay [K,L,M]
			PI < 4 or plots below "A" line [J]	ML	Silt [K,L,M]
		organic	$\frac{\text{Liquid limit – oven dried}}{\text{Liquid limit – not dried}} < 0.75$	OL	Organic clay [K,L,M,N] Organic silt [K,L,M,O]
	Silts and Clays Liquid limit 50 or more	inorganic	PI plots on or above "A" line	CH	Fat clay [K,L,M]
			PI plots below "A" line	MH	Elastic silt [K,L,M]
		organic	$\frac{\text{Liquid limit – oven dried}}{\text{Liquid limit – not dried}} < 0.75$	OH	Organic clay [K,L,M,P] Organic silt [K,L,M,O]
HIGHLY ORGANIC SOILS		Primarily organic matter, dark in color, and organic odor		PT	Peat

[A] Based on the material passing the 3-in. (75-mm) sieve.

[B] If field sample contained cobbles or boulders, or both, add "with cobbles or boulders, or both" to group name.

[C] Gravels with 5 to 12 % fines require dual symbols:
GW-GM well-graded gravel with silt
GW-GC well-graded gravel with clay
GP-GM poorly graded gravel with silt
GP-GC poorly graded gravel with clay

[D] Sands with 5 to 12 % fines require dual symbols:
SW-SM well-graded sand with silt
SW-SC well-graded sand with clay
SP-SM poorly graded sand with silt
SP-SC poorly graded sand with clay

[E] $Cu = D_{60}/D_{10}$ $\quad Cc = \frac{(D_{30})^2}{D_{10} \times D_{60}}$

[F] If soil contains ≥ 15 % sand, add "with sand" to group name.

[G] If fines classify as CL-ML, use dual symbol GC-GM, or SC-SM.

[H] If fines are organic, add "with organic fines" to group name.

[I] If soil contains ≥ 15 % gravel, add "with gravel" to group name.

[J] If Atterberg limits plot in hatched area, soil is a CL-ML, silty clay.

[K] If soil contains 15 to 29 % plus No. 200, add "with sand" or "with gravel," whichever is predominant.

[L] If soil contains ≥ 30 % plus No. 200, predominantly sand, add "sandy" to group name.

[M] If soil contains ≥ 30 % plus No. 200, predominantly gravel, add "gravelly" to group name.

[N] PI ≥ 4 and plots on or above "A" line.

[O] PI < 4 or plots below "A" line.

[P] PI plots on or above "A" line.

[Q] PI plots below "A" line.

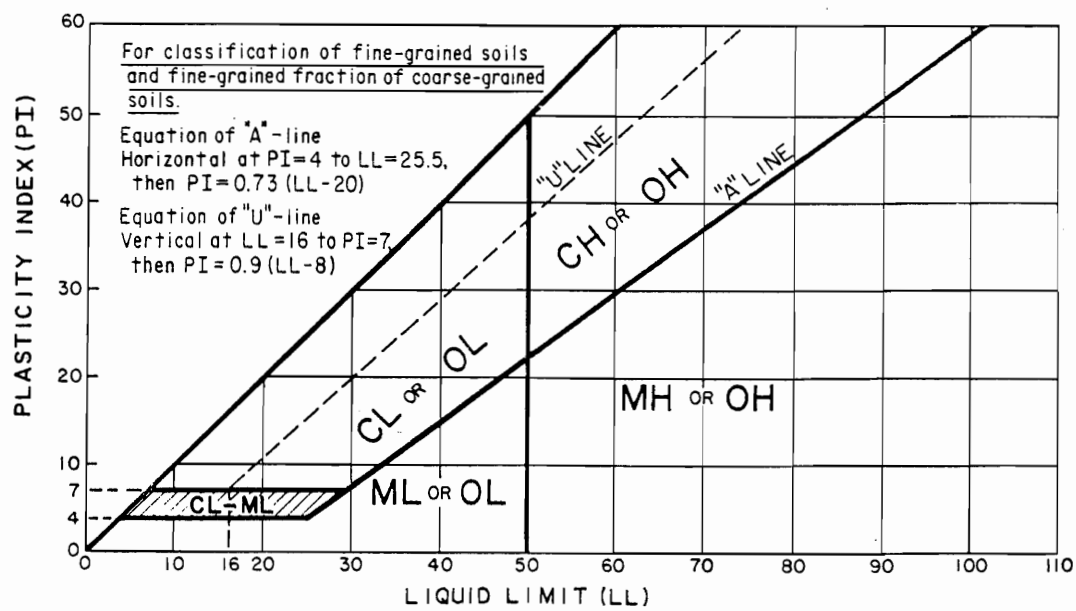

* ASTM 1996

LOG OF BORING NO. B-1

ENGINEERING & TESTING CONSULTANTS, INC.

PROJECT: Peavine Trail Pedestrian Crossing
PROJECT NO.: 7366
CLIENT: Lyon Engineering & Development, Inc.
DATE: 07/30/09
LOCATION: See Boring Location Map
ELEVATION: ---
DRILLER: ETC
LOGGED BY: EHG
DRILLING METHOD: Continuous Flight Auger

DEPTH (feet)	Description	GROUP SYMBOL	SOIL TYPE	SAMPLERS	TEST RESULTS (Plastic Limit ⊢—⊣ Liquid Limit; Water Content - ●; Penetration - ▨; 10 20 30 40 50)	Remarks
0	FILL - Clayey Sand, brown, damp, medium dense, moderate plasticity	FILL				Trail Grade Some Cinders
	FILL - VERY CLAYEY SAND with some GRAVEL, dark brown, damp, medium dense, moderate plasticity	FILL				SPT = 4/8/9
4						
8	CLAYEY SAND with some GRAVEL, brown, moist, medium dense, moderate plasticity	SC				Occasional Cobble SPT = 11/12/11
12						
16	CLAYEY GRAVEL with SAND and COBBLES, gray, damp, very dense, low plasticity	GC				
	Boring Terminated at 18 feet depth					
20						
24						
28						

This information pertains only to this boring and should not be interpreted as being indicitive of the site.

KEY TO SYMBOLS

Symbol	Description
Strata symbols	
	Fill
	Clayey sand
	Clayey gravel
Soil Samplers	
	Standard penetration test
	Bulk sample taken from 4 in. auger

Notes:

1. Exploratory borings were drilled on 07/30/09 using a 4-inch diameter continuous flight power auger.

2. No free water was encountered at the time of drilling.

3. Boring location was surveyd and staked in the field.

4. These logs are subject to the limitations, conclusions, and recommendations in this report.

5. Results of tests conducted on samples recovered are reported on the logs.

APPENDIX J

HIGHWAY CAPACITY MANUAL – LEVEL OF SERVICE CALCULATION

where

Q_{tdo} = total time spent by pedestrians waiting to cross the major street during one cycle (p-s);

v_{do} = the number of pedestrians waiting to cross the major street during one cycle, $\frac{p}{15\,min} * \frac{1\,min}{60\,s} * C$ (p/cycle);

R_{mi} = the minor-street red phase, or the Don't Walk phase if there are pedestrian signals (s); and

C = cycle length (s).

For Condition 2, as shown in Exhibit 18-12, Equation 18-8 is used to compute holding-area waiting time.

$$Q_{tco} = \frac{v_{co} R_{mj}^{2}}{2C} \tag{18-8}$$

where

Q_{tco} = total time spent by pedestrians waiting to cross the minor street during one cycle (p-s);

v_{co} = the number of pedestrians waiting to cross the minor street during one cycle, $\frac{p}{15\,min} * \frac{1\,min}{60\,s} * C$ (p/cycle);

R_{mj} = the major-street red phase, or the Don't Walk phase if there are pedestrian signals (s); and

C = cycle length (s).

Determining Circulation Time-Space

The net corner time-space available for circulating pedestrians is the total available time-space minus the time-space occupied by the pedestrians waiting to cross. The holding area required for waiting pedestrians is the product of the total waiting time and the area used by waiting pedestrians. Equation 18-9 is used to compute the time-space available.

$$TS_c = TS - \left[5(Q_{tdo} + Q_{tco})\right] \tag{18-9}$$

where

TS_c = total time-space available for circulating pedestrians (ft^2-s),

TS = total time-space available (ft^2-s),

Q_{tdo} = total time spent by pedestrians waiting to cross the major street during one cycle (p-s), and

Q_{tco} = total time spent by pedestrians waiting to cross the minor street during one cycle (p-s).

Pedestrian Space

Circulation time is assumed to equal 4 s

Finally, the space required for circulating pedestrians is computed by dividing the total time-space available for circulating pedestrians by the time that pedestrians consume walking through the corner area—that is, the sum of the total circulation volume multiplied by 4 s, the assumed average circulation time. This yields the area for each pedestrian, which is related to the LOS thresholds for walkways in Exhibit 18-3. Equation 18-10 is used for the computation.

$$M = \frac{TS_c}{4v_{tot}} \tag{18-10}$$

where

M = circulation area per pedestrian (ft²/p);
TS_c = total time-space available for circulating pedestrians (ft²-s); and
v_{tot} = total number of circulating pedestrians in one cycle = $v_{ci} + v_{co} + v_{di} + v_{do} + v_{a,b}$, as shown in Exhibits 18-11 and 18-12 (p/cycle).

Determining Crosswalk Time-Space

A time-space approach is used for crosswalks

Time-space of a crosswalk at a street corner is computed according to Equation 18-11 (*9*).

$$TS = LW_E\left((WALK + FDW) - \frac{L}{2S_p}\right) \quad or \tag{18-11}$$

$$TS = LW_E\left(G - \frac{L}{2S_p}\right) \quad when\ WALK + FDW\ is\ not\ installed$$

where

TS = time-space (ft²-s);
L = crosswalk length (ft);
W_E = effective crosswalk width (ft);
$WALK + FDW$ = effective pedestrian green time on crosswalk (s);
S_p = average speed of pedestrians (ft/s); and
G = green time for phase, if WALK + FDW is not installed (s).

The analysis of crosswalk time-space requires a pedestrian flow rate during the cycle length interval. Equation 18-12 allows the analyst to calculate the number of pedestrians crossing during the cycle length interval. Total crossing time or effective green time required to clear an intersection crossing is computed according to Equation 18-13, which incorporates the effects of dispersion of platoons larger than 15 pedestrians (*9*).

$$N_{ped} = \frac{v(C-G)}{C} \tag{18-12}$$

where

N_{ped} = number of pedestrians crossing during an interval (p);
v = pedestrian volume on the subject walkway (p/15-min);and
G = green time for phase, if WALK + FDW is not installed.

$$t = 3.2 + \frac{L}{S_p} + \left(2.7\frac{N_{ped}}{W}\right) \quad for\ W > 10\ ft \tag{18-13}$$

$$t = 3.2 + \frac{L}{S_p} + \left(0.27 N_{ped}\right) \quad for\ W \le 10\ ft$$

where

t = total crossing time (s),
L = crosswalk length (ft),
S_p = average speed of pedestrians (ft/s),
N_{ped} = number of pedestrians crossing during an interval (p),
W = crosswalk width (ft), and
3.2 = pedestrian start-up time (s).

The total crosswalk occupancy time is computed as a product of the average crossing time and the number of pedestrians using the crosswalk during one signal cycle. Equation 18-14 is used for the computation.

$$T = (v_i + v_o)\,t \tag{18-14}$$

where

T = total crosswalk occupancy time (p-s),
v_i = inbound pedestrian volume for the subject crosswalk (p/cycle),
v_o = outbound pedestrian volume for the subject crosswalk (p/cycle), and
t = total crossing time from Equation 18-12 (s).

The circulation space provided for each pedestrian is determined by dividing the time-space available for crossing by the total occupancy time, as in Equation 18-15. This yields the area provided for each pedestrian, which is related to LOS thresholds for walkways listed in Exhibit 18-3.

$$M = \frac{TS}{T} \tag{18-15}$$

where

M = circulation area per pedestrian (ft^2/p),
TS = time-space (ft^2-s), and
T = total crosswalk occupancy time (p-s).

The time-space method allows for an approximate estimate of the effect of turning vehicles on the LOS for pedestrians crossing during a given green phase. This assumes an area occupancy of a vehicle in the crosswalk, based on the product of vehicle swept-path, crosswalk width, and estimate of the time that the vehicle preempts this space. The swept-path for most vehicles is 8 ft, and it can be assumed that a vehicle occupies the crosswalk for 5 s. Equation 18-16 can be used to estimate time-space occupied by turning vehicles, which is subtracted from the time-space value obtained from Equation 18-11.

$$TS_{tv} = 40 N_{tv} W_E \tag{18-16}$$

where

TS_{tv} = time-space occupied by turning vehicles (ft^2-s),
N_{tv} = number of vehicles during the green phase (veh), and
W_E = effective width of crosswalk (ft).

Determining Pedestrian Effective Green Time

Minimum effective green required for two-way flow conditions can be estimated using shock-wave theory and observation. If there are high pedestrian volumes, a shock-wave approach can ensure adequate crossing time for large two-way platoon flows. But in low-volume conditions, minimum time requirements can be determined using Equation 18-6, which also accounts for platoon flow.

Pedestrians use both the Walk interval and the first few seconds of the flashing Don't Walk interval to enter the intersection. For the delay calculations in Equation 18-5, the effective green interval is equal to the walk interval plus the first 4 s of the flashing Don't Walk (*1,10*).

Unsignalized Intersections

The method for unsignalized intersections does not apply to zebra-striped crosswalks

Another procedure applies to an unsignalized intersection with a pedestrian crossing against a free-flowing traffic stream or an approach not controlled by a stop sign. However, if there are zebra-striped crossings at an unsignalized intersection, this procedure does not apply, because pedestrians have the right-of-way; instead, pedestrian delay can be estimated using the method for two-way stop-controlled (TWSC) intersections.

A crossing of an unsignalized intersection is more complicated to analyze than one at midblock, because it involves intersecting sidewalk flows, pedestrians crossing the street,

Critical gap for pedestrians

and pedestrian judgment of an acceptable gap. The procedure for estimating the critical gap is similar to that described in Chapter 17, "Unsignalized Intersections."

The critical gap is the time in seconds below which a pedestrian will not attempt to begin crossing the street. Pedestrians use their own judgment to determine if the available gap is long enough for a safe crossing. If the available gap is greater than the critical gap, it is assumed that the pedestrian will cross, but if the available gap is less than the critical gap, it is assumed that the pedestrian will not cross.

For a single pedestrian, critical gap is computed according to Equation 18-17.

$$t_c = \frac{L}{S_p} + t_s \tag{18-17}$$

where

t_c = critical gap for a single pedestrian (s),
S_p = average pedestrian walking speed (ft/s),
L = crosswalk length (ft), and
t_s = pedestrian start-up time and end clearance time (s).

Platooning

If platooning is observed in the field, then the spatial distribution of pedestrians should be computed using Equation 18-18, to determine group critical gap. To compute spatial distribution, the analyst must observe in the field or estimate the platoon size using Equation 18-19. Group critical gap is determined using Equation 18-20. If no platooning is observed, spatial distribution of pedestrians is assumed to be 1.

$$N_p = INT\left[\frac{8.0(N_c - 1)}{W_E}\right] + 1 \tag{18-18}$$

where

N_p = spatial distribution of pedestrians (p),
N_c = total number of pedestrians in the crossing platoon (p),
W_E = effective crosswalk width (ft), and
8.0 = default clear effective width used by a single pedestrian to avoid interference when passing other pedestrians.

$$N_c = \frac{v_p e^{v_p t_c} + v e^{-v t_c}}{(v_p + v) e^{(v_p - v) t_c}} \tag{18-19}$$

where

N_c = size of a typical pedestrian crossing platoon (p),
v_p = pedestrian flow rate (p/s),
v = vehicular flow rate (veh/s), and
t_c = single pedestrian critical gap (s).

$$t_G = t_c + 2(N_p - 1) \tag{18-20}$$

where

t_G = group critical gap (s),
t_c = critical gap for a single pedestrian (s), and
N_p = spatial distribution of pedestrians (p).

The delay experienced by a pedestrian is the service measure. Research indicates that average delay of pedestrians at an unsignalized intersection crossing depends on the critical gap, the vehicular flow rate of the subject crossing, and the mean vehicle headway (*11*). The average delay per pedestrian for a crosswalk is given by Equation 18-21.

$$d_p = \frac{1}{v}\left(e^{v t_G} - v t_G - 1\right) \tag{18-21}$$

where

d_p = average pedestrian delay (s),
v = vehicular flow rate (veh/s), and
t_G = group critical gap from Equation 18-19 (s).

Exhibit 18-13 lists LOS criteria for pedestrians at unsignalized intersections, based on pedestrian delay. Pedestrians expect and tolerate smaller delays at unsignalized intersections than at signalized intersections. Exhibit 18-13 also includes a likelihood of pedestrian risk-taking behavior related to LOS.

EXHIBIT 18-13. LOS CRITERIA FOR PEDESTRIANS AT UNSIGNALIZED INTERSECTIONS

LOS	Average Delay/Pedestrian (s)	Likelihood of Risk-Taking Behavior[a]
A	< 5	Low
B	≥ 5–10	
C	> 10–20	Moderate
D	> 20–30	
E	> 30–45	High
F	> 45	Very High

Note:
a. Likelihood of acceptance of short gaps.

Pedestrian Sidewalks on Urban Streets

Analysis of extended facilities with both uninterrupted and interrupted flows

This section focuses on the analysis of extended pedestrian facilities with both uninterrupted and interrupted flows. Average pedestrian travel speed, including stops, is the service measure. This average speed is based on the distance between two points and the average amount of time required—including stops—to traverse that distance.

Pedestrian sidewalks along urban streets comprise segments and intersections. The first step in analyzing an urban street is to define its limits, then to segment it for analysis. Each segment consists of a signalized intersection and an upstream segment of pedestrian sidewalk, beginning immediately after the nearest upstream signalized or unsignalized intersection. The average travel speed over the entire section is computed according to Equation 18-22.

$$S_A = \frac{L_T}{\Sigma \frac{L_i}{S_i} + \Sigma d_j} \tag{18-22}$$

where

L_T = total length of the urban street under analysis (ft),
L_i = length of Segment i (ft),
S_i = pedestrian walking speed over Segment i (ft/s),
d_j = pedestrian delay at Intersection j (s), and
S_A = average pedestrian travel speed (ft/s).

There are many factors that affect pedestrian speed, including adjacent activities on the walkway, commercial and residential driveways, lateral obstructions, significant grades, effective width of sidewalk, and other local features. Research has been insufficient to produce specific recommendations on their individual and collective effect. Intersection delays, however, can be computed, as described earlier.

LOS criteria based on pedestrian travel speed are listed in Exhibit 18-14. The criteria generally resemble the urban street LOS criteria for motor vehicles; the thresholds are set at similar percentages of the base speed (*4*).

EXHIBIT 18-14. LOS CRITERIA FOR PEDESTRIAN SIDEWALKS ON URBAN STREETS

LOS	Travel Speed (ft/s)
A	> 4.36
B	> 3.84–4.36
C	> 3.28–3.84
D	> 2.72–3.28
E	≥ 1.90–2.72
F	< 1.90

III. APPLICATIONS

Guidelines for required inputs and estimated values are in Chapter 11

The methodology presented in this chapter is for analyzing the capacity and LOS of pedestrian facilities. The analyst must address two fundamental questions. First, the primary outputs must be identified; these include LOS and effective width (W_E). Second, the default values or estimated values must be identified for use as input data for the analysis. Basically, there are three sources of input data:

1. Default values found in this manual;
2. Estimates or locally derived default values developed by the user; and
3. Values derived from field measurements and observation.

For each of the input variables, a value must be supplied to calculate both the primary and secondary outputs.

A common application of this method is to compute the LOS of a current or changed facility in the near term or the distant future. This application is termed operational, and its primary output is LOS. Alternatively, effective width, W_E, can be set as the primary output; this is known as a design analysis. It requires that a LOS goal be established, and the result typically is used to estimate the adequacy of a specific effective width.

Another general type of analysis can be defined as planning. Planning analysis uses estimates, HCM default values, and local default values as inputs and determines LOS or effective width as outputs. The difference between a planning analysis and an operational or design analysis is that most or all of the input values in planning come from estimates or default values, but operational and design analyses employ field measurements or known values for most or all of the variables.

COMPUTATIONAL STEPS

The worksheets for computations involving pedestrian facilities are shown in Exhibits 18-15 and 18-16. For all applications, the analyst provides general information and site information.

Operational (LOS)

For operational (LOS) analysis, all flow data are entered as input. Based on the type of pedestrian facility, performance measures are computed and LOS is determined.

Design (W_E)

The objective of design (W_E) analysis is to estimate the minimum effective width of a facility, given a desired LOS. For sidewalks and crosswalks, first the maximum pedestrian unit flow rate for the desired LOS is determined. Then effective widths are computed by solving the pedestrian unit flow-rate equation backwards.

PLANNING APPLICATIONS

Planning (LOS)
Planning (W_E)

The two planning applications—for LOS and W_E—correspond to procedures described for operations and design. The primary criterion that categorizes these as planning applications is the use of estimates, HCM default values, and local default values. Chapter 11 contains more information on the use of default values.

ANALYSIS TOOLS

The worksheets shown in Exhibits 18-15 and 18-16 and provided in Appendix A can be used to perform all applications of the methodology.

EXHIBIT 18-15. PEDESTRIANS WORKSHEET

PEDESTRIANS WORKSHEET

General Information		Site Information	
Analyst	JRB	Facility	Road 39 & Pearine
Agency or Company	Lyon	Jurisdiction	COP
Date Performed	8-11-09	Analysis Year	2030
Analysis Time Period			

☒ Operational (LOS) ☐ Design (W_E) ☒ Planning (LOS) ☐ Planning (W_E)

Walkways and Sidewalk Pedestrian Facilities	1	2
Total width of crosswalks, W_T (ft)		
Sum of obstructions width and/or shy distances,[1] W_o (ft)		
Effective crosswalk width, W_E (ft), $W_E = W_T - W_o$		
Peak 15-min flow rate (both directions), v_{15} (p/15-min)		
Pedestrian unit flow rate, v_p (p/min/ft), $v_p = \frac{v_{15}}{15 * W_E}$		
LOS (Exhibits 18-3, 18-4, 18-5, 18-6, or 18-7)		

Shared Pedestrian-Bicycle Facilities		
Mean pedestrian speed, S_p (ft/s)		
Mean bicycle speed, S_b (ft/s)		
Same-direction bicycle flow rate, Q_{sb} (bicycles/h)		
Opposing-direction bicycle flow rate, Q_{ob} (bicycles/h)		
Passing events, F_p (events/h), $F_p = Q_{sb}\left(1 - \frac{S_p}{S_b}\right)$		
Opposing events, F_m (events/h), $F_m = Q_{ob}\left(1 + \frac{S_p}{S_b}\right)$		
Total events, F (events/h), $F = F_p + 0.5F_m$		
LOS (Exhibit 18-8)		

Crossings at Signalized Intersections, Unsignalized Intersections, and Urban Street Facilities								
Pedestrian Delay at Signalized Intersections	1	2	3	4	5	6	7	8
Cycle length, C (s)								
Effective green time for pedestrians, g (s)								
Average delay, d_p (s), $d_p = \frac{0.5(C-g)^2}{C}$								
LOS at signalized intersections (Exhibit 18-9)								
Pedestrian Delay at TWSC Intersections								
Pedestrian walking speed, S_p (ft/s)	4 ft/sec							
Pedestrian start-up time, t_s (s)	3.2 sec							
Length of crosswalk, L (ft)	50 ft							
Single pedestrian critical gap, t_c (s), $t_c = \frac{L}{S_p} + t_s$	15.7 sec							
Typical pedestrian number in crossing platoon, N_c	1							
Spatial pedestrian distribution,[2] N_p (p), $N_p = \text{INT}\left[\frac{8.0(N_c - 1)}{W_E}\right] + 1$	1							
Group critical gap, t_G (s), $t_G = t_c + 2(N_p - 1)$	15.7 sec							
Vehicular flow rate, v (veh/s)	0.053 veh/sec							
Average pedestrian delay, d_p (s), $d_p = \frac{1}{v}(e^{vt_G} - vt_G - 1)$	8.8 → 9							
LOS at unsignalized intersections (Exhibit 18-13)	B							
Average Pedestrian Travel Speeds Over Several Links								
Length of link,[3] L_i (ft)								
Average travel speed, S_A (ft/s), $S_A = \frac{L_T}{\Sigma \frac{L_i}{S_i} + \Sigma d_i}$								
LOS urban street pedestrian facility (Exhibit 18-14)								

Notes

1. Includes curb width, street furniture, window shops, building protrusions, inside clearance, and all other field-observed obstructions.
2. If there is no platoon crossing, assume $N_p = 1$.
3. Link length includes segment length of sidewalk and upstream signal crosswalk length.

EXHIBIT 18-16. PEDESTRIANS AT SIGNALIZED INTERSECTIONS WORKSHEET

PEDESTRIANS AT SIGNALIZED INTERSECTIONS WORKSHEET

General Information		Site Information	
Analyst	_____	Intersection/Corner	_____
Agency or Company	_____	Jurisdiction	_____
Date Performed	_____	Analysis Year	_____
Analysis Period	_____		

☐ Operational (LOS) ☐ Design (W_E) ☐ Planning (LOS) ☐ Planning (W_E)

Inputs

Cycle length, C _____ s
Minor-street red phase, R_{mi} _____ s
Major-street red phase, R_{mj} _____ s
Minor-street effective green, g_i _____ s
Major-street effective green, g_j _____ s

	Flow, p/15-min	Flow, $\frac{p}{15min} \cdot \frac{1}{60}$ = p/s	Flow, p/s * C
v_{ci}			
v_{co}			
v_{di}			
v_{do}			
$v_{a,b}$			
v_{tot}			

Geometric Inputs

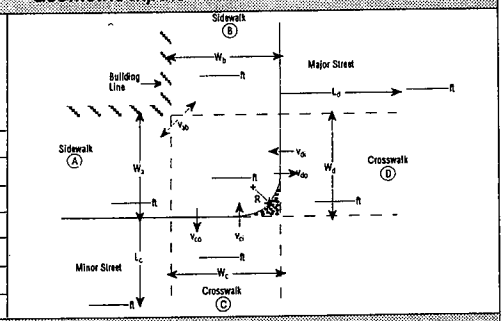

Street Corner Time-Space Analysis

Total time-space, TS (ft^2-s) $TS = C(W_aW_b - 0.215R^2)$	
Time spent by pedestrians crossing major street, Q_{tdo} (p-s), $Q_{tdo} = \frac{v_{do} R_{mi}^2}{2C}$	
Time spent by pedestrians crossing minor street, Q_{tco} (p-s), $Q_{tco} = \frac{v_{co} R_{mi}^2}{2C}$	
Total time-space available, TS_c (ft^2-s), $TS_c = TS - [5(Q_{tdo} + Q_{tco})]$	
Circulation area per pedestrian, M (ft^2/p), $M = \frac{TS_c}{4v_{tot}}$	
LOS (Exhibit 18-3)	

Crosswalk Time-Space Analysis

Average Pedestrian Delay at Signalized Intersections	Crosswalk D	Crosswalk C
Average delay, d_p (s), $d_p = \frac{0.5(C-g)^2}{C}$		
LOS at signalized intersection (Exhibit 18-9)		
Number of pedestrians arriving during Don't Walk or red indication,[1] N_{ped} (p)		
Average pedestrian walking speed, S_p (ft/s)		
Total crossing time,[2] t (s)		
Total time-space, TS (ft^2-s), $TS = LW(WALK + FDW - \frac{L}{2S_p})$		
Total crosswalk occupancy time, T (p-s) $T = (v_i + v_o)t$		
Number of conflicting right-turning vehicles, N_{tv} (veh)		
Time-space of right-turning vehicles, TS_{tv} (ft^2-s), $TS_{tv} = 40N_{tv}W_E$		
Effective time-space, TS_E (ft^2-s), $TS_E = TS - TS_{tv}$		
Circulation area per pedestrian, M (ft^2/p), $M = \frac{TS_E}{T}$		
LOS (Exhibit 18-3)		

Notes

1. Number of people in the subject movement who arrive before the WALK or concurrent green indication and exit the curb during the WALK or concurrent green indication. $N_{ped} = \frac{v_{co} \text{ or } v_{do}(C-G)}{C}$
2. If W > 10 ft, $t = 3.2 + \frac{L}{S_p} + (2.7\frac{N_{ped}}{W})$; but if W ≤ 10 ft, $t = 3.2 + \frac{L}{S_p} + (0.27N_{ped})$.

Level of Service Calculations

- $t_c = \frac{L}{S_p} + t_s$
  - Equation 18-17 (HCM2000)
    - t_c is critical gap for a single pedestrian (seconds)
    - L is crosswalk length (ft)
    - S_p is average pedestrian walking speed (ft/sec)
      - 4 ft/sec (AASHTO)
    - t_s is pedestrian start-up time and clearance time (sec)
      - 3.2 sec (page 18-12)

$$t_c = \frac{50\ ft}{4\ ft} + 3.2 = \mathbf{15.7\ sec}$$

- $t_{g=\ t_c+2(N_p-1)}$
  - Equation 18-20 (HCM2000)
    - t_g is group critical gap (seconds)
    - N_p is spatial distribution of pedestrian (pedestrians)
      - 1 pedestrian since no platooning is assumed

$$t_g = 15.7\ \text{sec} + 2(1-1) = \mathbf{15.7\ sec}$$

- $d_p = \frac{1}{v} * \left(e^{vt_g} - vt_g - 1\right)$
  - Equation 18-21 (HCM2000)
    - d_p is average pedestrian delay (seconds)
    - V is vehicular flow rate (vehicles per second)
      - V = 2,300 vehicles per day
        - 2,300 vehicles per day from Granite Dells Estates traffic study
        - Section 4.0 and Appendix H
        - Assume a 12 hour day
        - $\frac{2300\ \text{vehicles}}{\text{day}} * \frac{1\ \text{day}}{12\ \text{hours}} * \frac{1\ \text{hour}}{60\ \text{minutes}} * \frac{1\ \text{minute}}{60\ \text{seconds}} = \mathbf{\frac{0.053\ vehicles}{second}}$

$$d_p = \frac{1}{\frac{0.053\text{vehicles}}{\text{second}}} * \left(e^{\left(0.053\frac{\text{vehicles}}{\text{second}} * 15.7\ \text{sec}\right)} - \frac{0.053\text{vehicles}}{\text{second}} * 15.7\ \text{seconds} - 1\right) = 8.8 \Rightarrow \mathbf{9.0}$$

- Exhibit 18-13 (HCM2000)
  - If $d_p \geq$ 5-10
    - Level of service (LOS) = ‘B’
    - Likelihood of risk taking behavior = Low to Moderate

APPENDIX K

FEDERAL HIGHWAY ADMINISTRATION CHART

Table 11. Recommendations for installing marked crosswalks and other needed pedestrian improvements at uncontrolled locations.*

Roadway Type (Number of Travel Lanes and Median Type)	Vehicle ADT ≤ 9,000			Vehicle ADT >9,000 to 12,000			Vehicle ADT >12,000–15,000			Vehicle ADT > 15,000		
	Speed Limit**											
	≤ 48.3 km/h (30 mi/h)	56.4 km/h (35 mi/h)	64.4 km/h (40 mi/h)	≤ 48.3 km/h (30 mi/h)	56.4 km/h (35 mi/h)	64.4 km/h (40 mi/h)	≤ 48.3 km/h (30 mi/h)	56.4 km/h (35 mi/h)	64.4 km/h (40 mi/h)	≤ 48.3 km/h (30 mi/h)	56.4 km/h (35 mi/h)	64.4 km/h (40 mi/h)
Two lanes	C	C	P	C	C	P	C	C	N	C	P	N
Three lanes	C	C	P	C	P	P	P	P	N	P	N	N
Multilane (four or more lanes) with raised median***	C	C	P	C	P	N	P	P	N	N	N	N
Multilane (four or more lanes) without raised median	C	P	N	P	P	N	N	N	N	N	N	N

* These guidelines include intersection and midblock locations with no traffic signals or stop signs on the approach to the crossing. They do not apply to school crossings. A two-way center turn lane is not considered a median. Crosswalks should not be installed at locations that could present an increased safety risk to pedestrians, such as where there is poor sight distance, complex or confusing designs, a substantial volume of heavy trucks, or other dangers, without first providing adequate design features and/or traffic control devices. Adding crosswalks alone will not make crossings safer, nor will they necessarily result in more vehicles stopping for pedestrians. Whether or not marked crosswalks are installed, it is important to consider other pedestrian facility enhancements (e.g., raised median, traffic signal, roadway narrowing, enhanced overhead lighting, traffic-calming measures, curb extensions), as needed, to improve the safety of the crossing. These are general recommendations; good engineering judgment should be used in individual cases for deciding where to install crosswalks.

** Where the speed limit exceeds 64.4 km/h (40 mi/h), marked crosswalks alone should not be used at unsignalized locations.

*** The raised median or crossing island must be at least 1.2 m (4 ft) wide and 1.8 m (6 ft) long to serve adequately as a refuge area for pedestrians, in accordance with MUTCD and American Association of State Highway and Transportation Officials (AASHTO) guidelines.

C = Candidate sites for marked crosswalks. Marked crosswalks must be installed carefully and selectively. Before installing new marked crosswalks, an engineering study is needed to determine whether the location is suitable for a marked crosswalk. For an engineering study, a site review may be sufficient at some locations, while a more indepth study of pedestrian volume, vehicle speed, sight distance, vehicle mix, and other factors may be needed at other sites. It is recommended that a minimum utilization of 20 pedestrian crossings per peak hour (or 15 or more elderly and/or child pedestrians) be confirmed at a location before placing a high priority on the installation of a marked crosswalk alone.

P = Possible increase in pedestrian crash risk may occur if crosswalks are added without other pedestrian facility enhancements. These locations should be closely monitored and enhanced with other pedestrian crossing improvements, if necessary, before adding a marked crosswalk.

N = Marked crosswalks alone are insufficient, since pedestrian crash risk may be increased by providing marked crosswalks alone. Consider using other treatments, such as traffic-calming treatments, traffic signals with pedestrian signals where warranted, or other substantial crossing improvement to improve crossing safety for pedestrians.

Taken from: Safety Effects of Marked Versus Unmarked Crosswalks at Uncontrolled Locations, FHWA Publication Number HRT-04-100, September 2005

APPENDIX L

LOCATION MAP FOR PHOTOS

PEAVINE TRAIL PHOTO LOCATION MAP

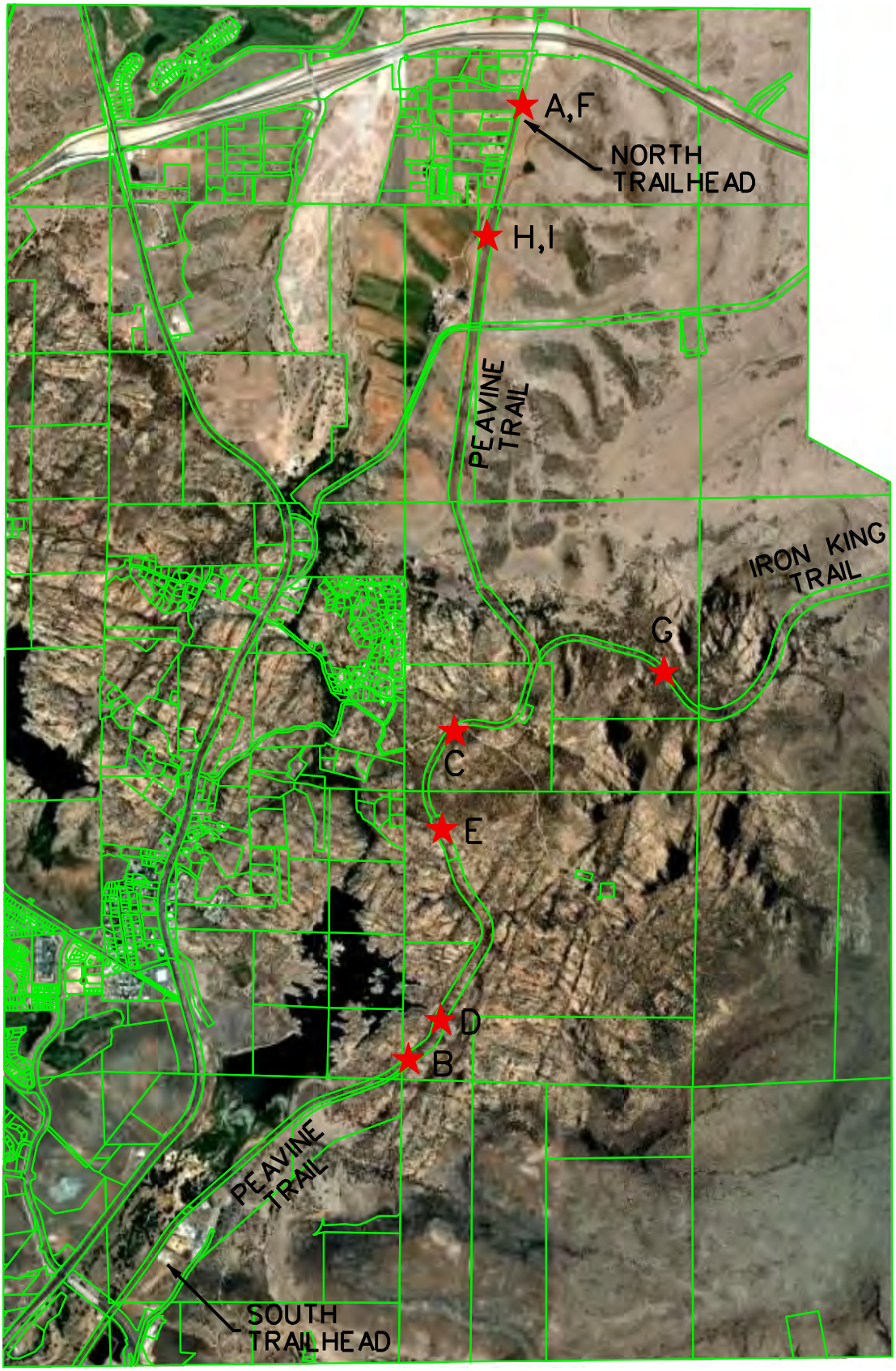

N

1" = 3000'
(APPROXIMATE)

PHOTO LABEL	REPORT LOCATION (PAGE #)
A	COVER
B	5
C	6
D	7
E	8 (UPPER)
F	8 (LOWER)
G	10
H	11
I	20

LYON ENGINEERING
Civil Engineers • Land Surveyors
3623 CROSSINGS DRIVE
PRESCOTT, AZ 86305
(928) 776-1750

NOTE:

THE LOCATIONS SHOWN IN THIS EXHIBIT ARE FOR REFERENCE ONLY, AND DEPICT APPROXIMATE LOCATIONS OF THE PHOTOS CONTAINED IN THE REPORT.

FOR EXHIBIT USE ONLY

APPENDIX M

PUBLIC COMMENTS AND SUMMARY

Peavine Trail/Road 39 Public Comment Summary

Following the September 24, 2009 Peavine Trail Crossing Alternative presentation at the Prescott Armory, the public was given the opportunity to provide the city with comments regarding the "Peavine Trail Crossing Design Report" and recommendations dated September 23, 2009. The report was distributed at the September 24th meeting and was also available for download on the City of Prescott website. The public comment period was open between September 24 and October 30, 2009. At the request of the city, Lyon Engineering has assembled the comments and prepared this summary recitation to be included as an appendix in the final report. All of the comments have been inserted into this document in their original form, and have been read by both City of Prescott and Lyon Engineering staff. Below is a list of the categories used to help catalog the comments as to their subject nature.

Safety (8):

Several of the comments were placed under the "safety" category due to statements regarding the wellbeing of the trail users. All of the comments in this category favor a grade-separated option over an at-grade option because of the perception that the at-grade option is less safe than the other alternatives. Some comments showed concern for young children and a potential inability for them to safely navigate an at-grade crossing option.

Functional Design Criteria (19):

Many of the comments provided input regarding the actual design parameters, trail users, and constraints that should be considered in the design of the crossing. Although all of the comments in this category supported a grade-separated crossing alternate, there was a wide range of input regarding the appropriate grade-separated alternative to be implemented.

Community Asset (11):

This group of comments expresses the importance of the Peavine Trail to the trail users and the community as a whole. The Peavine is a National Recreation Trail, and is perceived to be a valuable community asset in the comments. Some of the comments state the importance of preservation the trail's character when selecting a crossing solution. Other comments focus on the financial value of the trial to the surrounding developers and community. Some comments state that the trail adds to property values and adds to the tax revenues collected by the City of Prescott due to tourism.

Revised Matrix and Analysis of Report Contents (3):

The comments located in this category conducted a critique of the report and/or matrix contents, and provided a revised analysis based on their interpretation of the available information. All of the comments in this category recommend a grade-separated crossing as the preferred alternative.

Miscellaneous Comments and Correspondence (6):

The comments and correspondence in this category do not fall into any of the other general categories listed above. Some of the comments list an opinion, but do not go into detail regarding the reasons for the alternate desired. Other items in this category are general correspondence that does not provide an opinion regarding a desired alternate.

Safety

Attention: Scott Tkach
Dear Mr. Tkach, Thank you for accepting comments from the public regarding the Peavine crossing. I appreciate your commitment to the citizens. I would like to comment on three points: safety, economic impact, and health. Safety is a primary concern for all Prescott citizens. Since the September presentation of the Peavine Crossing Study, I have been paying close attention to various users of the Peavine Trail. I share the Peavine with about 20 other people during my 1 hour bike ride out and back on the trail. I believe that a separated grade crossing is warranted for adequate safety of all trail users, but there are a few users for whom an at-grade crossing (even with a refuge zone) would be grossly unsafe. These users include groups of children supervised by a few adults as exemplified by a young family or the local Girl Scout Troop of 16 girls and 3 adults. Another user is the adult riding a bike towing trailer containing small child. The trailer is a little over 4.6 feet long in addition to 5 foot length of the bike. An at-grade refuge could not safely accommodate these users. My second point is regarding economic impact. Please see this link http://americantrails.org/resources/economics/index.html for a myriad of studies and articles regarding positive economic impact to communities who support trails. People who use trails consume food and drink, purchase recreation clothing, stop for lunch and coffee along the trail, and need lodging if they are from out of town. This benefits not only the community, but also commercial development near the trail and trailheads. My final comment is about health and well-being of a community. According to the demographics cited on the City of Prescott website at http://www.cityofprescott.net/_d/demographics_20.pdf of citizens within a 20-mile radius, 28% were aged 60 and over in 2008 with a projection of 30% aged 60 and over by 2013. Physical activity is a major contributor to "aging well." The booklet "Growing Smarter, Living Healthier: A Guide to Smart Growth and Active Aging" published by the EPA Aging Initiative defines Active Aging concepts as "activities that increase endurance, strength, flexibility, balance, and the principles of injury prevention." These concepts may be included in community design and development with parks and trails that encourage walking, biking, and active use so that people of all ages may get exercise. I urge you and others making the decision regarding the Peavine crossing to consider these comments. Elders and children are the "canaries in the coal mine" of a community. If we make Prescott a safe and healthy place for our oldest and our youngest, we will all benefit. Thank you again for reading my comments. I look forward to enjoying Prescott for many years in the future. Sincerely, Susie Hehlen 1380 E Valley View Rd Prescott AZ 771-8182

From: Susie Hehlen

Attention: Scott Tkach
1. I am appalled that the City of Prescott would allow ANY road crossing of this trail. Just say NO. Have some guts to do the right thing. 2. Since this is Prescott, I'm sure you will be saying YES. Given that , PLEASE pay for a crossing that completely optimzes continued safe use of the trail for equestrians, bicycles, family groups with young children, etc. This is not a time to be cheap. You can't re-create natural spaces once they have been obliterated by "progress". Thank you for taking my comments.

From: Allison Dixon

Attention: Scott Tkach
There is no doubt in my mind that Options 2 through 4 with trail users being separated from traffic are the only one that should be in consideration for this crossing or any future crossings. This decision sets the precedence, so the possibility of five at-grade crossings relatively close together is very disturbing. I ask that you do what\'s best for our quality of life and send a strong message that those that come after need to respect the public users who came first and develop accordingly. No matter the safety

mechanism in place for an at-grade crossing, the known impatiences and carelessness of motorized traffic combined with their ability to do major bodily harm is insufficient to retain the health, well being and user experience that Peavine recreationalists deserve. Jim Craig

From: James Craig

Attention: Scott Tkach

Please consider my comments on the Peavine/Road 39 crossing issue. As a citizen of Prescott, it is my opinion that any actions that may impact the Peavine Trail deserve greater care than usual, owing to the Peavine Trail's status as an asset to the community, and for the amount of investment our community has poured in to this facility. As a member of the Prescott Bicycle Advisory Committee, my perspective is skewed towards insuring the safety of our bicyclists and pedestrians. In short, I believe that any of the "separated grade crossings" would prove superior in protecting the safety of our trail users. I do believe that it would be possible to construct a reasonably safe "at grade crossing", but I don't think the provisions described in "Option One" go far enough in protecting the trail users. Among the problems I see, are that it not a crossing that is controlled by a signal. Cross traffic does not have to stop, or even slow when approaching the crossing, and there is no indication pedestrians as well as equestrians will be crossing at the location. The bike route and striped crosswalk may only give trail users a false sense of security, and actually encourage them to take a greater risk when attempting to cross the road. I believe design tools exist to make an at grade crossing much safer than proposed. Add a personal opinion on aesthetics, and my choice would be "Option Two" as safest and best. Sincerely, Jim Knaup

From: Jim Knaup

Attention: Scott Tkach

As a 16 plus year resident of Prescott and volunteer who worked on making the Peavine trail a premier destination for trail and bicycle visitors and residents alike, I am disappointed in the preferred recommendation for the at-grade crossing at Road 39 and any other future crossings in the development. This community asset was here long before any development was ever envisioned in this area. The criteria for minimizing impact to this recreational trail should have been in place so that all future property owners would know that they would be responsible for creating grade separated crossings that will keep the trail user experience intact. Although there are many safety enhancement design variations for an At-Grade Crossing, the non-urban settings with the elderly or children on bikes creates a dangerous situation for the pedestrian not represented by the general national pedestrian/vehicular accident statistics. This area is zoned for up to 65% residential which could mean a much greater volume of Peavine pedestrian use than the current south end where there is not a close residential component. I also doubt the ability of drivers to slow down in a timely fashion so accidents are minimized. This is a liability nightmare waiting to happen and though the at-grade cost is cheaper, the long term cost is not only monetary but perhaps at the expense of a human life. The liability is greatly reduced using a grade seperated road crossing. The four other separated-Grade crossing using a pedestrian overpass bridge or pedestrian box culvert will safely and completely separate the vehicular and pedestrian cross traffic. This eliminates the risk of a pedestrian/vehicular collision and create a more positive experience for both the vehicle and trail users. This is a road project with funding available to do the right thing and going for the at-grade choice sends a message that our quality of life is not second class to that of the convenience of drivers and the whims of the proposed development plan. It violates the intent of the city's general master plan. We the taxpayers should not be bearing the majority of this ingress and egress cost into a private development. The developer should be bearing the difference. Why was this not made part of the initial PAD? Of all the studies and statistics that your consultant

placed before you the biggest most obvious omission is is the lack of input by the actual people who will be the most greatly affected. A survey should have been part of the RFP process when you hired Lyon engineering. Why was it not? Public meetings have been lacking in their inability ability to really ask questions and have any menaingful dialoge. The City of Prescott services departments and citizens all agreed that the Peavine Trail portions owned by the City, would be constructed and maintained to provide a single safe and pleasant experience. This has always been identified as a special and unique area, which Prescott would provide to the residents, visitors, and tourists as a destination for families, the elderly, and those with disabilities. I am asking that grade separated options 2, 3 and 4 be considered acceptable with the choice of Option 2 being the preferred design for the greatest benefit. Safery should come before construction dollar costs. Respectfully, Charlene Craig

From: Charlene Craig

Attention: Scott Tkach

I am a runner (one of Gerald Brownlowe's runners)and I use the Peavine Trail regularly. It and Thumb Butte are top tourist and resident attractions. As a runner, safety is paramount. I can't imagine the City selecting an alternative that didn't provide the highest level of safety. In the 10 years that I have used the trails I have observed thousands of users of all ages and capabilities from the very young on bikes with training wheels to the very old. Peavine has been an ideal trail because of its safety. Please don't consider compromising safety for cost or aesthetics.

From: Lucy McMillan

Attached are national 2007/2008 fatality data for pedestrians and bikes. Some information may be helpful to support safety issues for the Peavine.

From: Rob Hehlen

NOTE: THE ATTACHMENT INCLUDED IN THE CORRESPONDENCE ABOVE IS SHOWN ON THE FOLLOWING PAGE

Traffic Safety Facts

2007 Data

NHTSA
www.nhtsa.gov

DOT HS 810 994

Pedestrians

"In 2007, 4,654 pedestrians died in traffic crashes — a 13-percent decrease from the number reported in 1997."

A pedestrian is defined as any person not in or upon a motor vehicle or other vehicle.

In 2007, 4,654 pedestrians were killed in traffic crashes in the United States — a decrease of 13 percent from the 5,321 pedestrians killed in 1997.

On average, a pedestrian is killed in a traffic crash every 113 minutes and injured in a traffic crash every 8 minutes.

There were 70,000 pedestrians injured in traffic crashes in 2007.

Most pedestrian fatalities in 2007 occurred in urban areas (73%), at non-intersection locations (77%), in normal weather conditions (90%), and at night (67%).

More than two-thirds (70%) of the pedestrians killed in 2007 were males. In 2007, the male pedestrian fatality rate per 100,000 population was 2.19 — more than double the rate for females (0.91 per 100,000 population). In 2007, the male pedestrian injury rate per 100,000 population was 26, compared with 20 for females (see Table 5).

Figure 1
Total Pedestrian Fatalities by Year 1997-2007

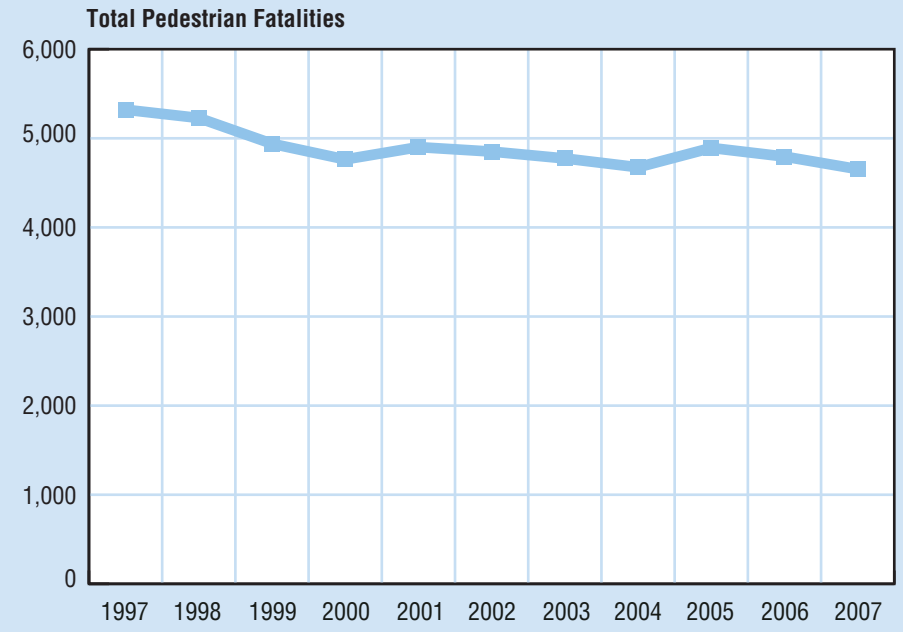

Age

Pedestrians (age 70+) accounted for 16 percent (721) of all pedestrian fatalities and an estimated 6 percent (4,000) of all pedestrians injured in 2007.

"In 2007, the fatality rate for pedestrians (age 70+) was 2.66 per 100,000 population – higher than for any other age group."

In 2007, one-fifth (20%) of all children between the ages of 5 and 9 who were killed in traffic crashes were pedestrians. Children age 15 and younger accounted for 8 percent of the pedestrian fatalities in 2007 and 23 percent of all pedestrians injured in traffic crashes.

"In 2007, nearly one-fifth of the children between the ages of 5 and 9 killed in traffic crashes were pedestrians."

Table 1

Pedestrians Killed and Injured by Age Group, 2007

Age Group (Years)	Total Killed	Pedestrians Killed	Percentage of Total Killed
<5	508	106	21
5-9	470	93	20
10-15	1,044	155	15
16-20	5,338	287	5
21-24	4,530	296	7
25-29	3,932	341	9
30-34	2,864	265	9
35-39	3,022	354	12
40-44	3,060	400	13
45-49	3,261	469	14
50-54	2,869	447	16
55-59	2,384	306	13
60-64	1,717	188	11
65-69	1,334	182	14
70-74	1,268	200	16
75-79	1,247	192	15
80+	2,083	329	16
Unknown	128	44	34
Total	**41,059**	**4,654**	**11**
Age Group (Years)	**Total Injured**	**Pedestrians Injured**	**Percentage of Total Injured**
<5	56,000	2,000	4
5-9	65,000	5,000	7
10-15	108,000	9,000	8
16-20	391,000	8,000	2
21-24	267,000	6,000	2
25-29	256,000	6,000	2
30-34	214,000	4,000	2
35-39	194,000	3,000	2
40-44	182,000	5,000	3
45-49	192,000	6,000	3
50-54	155,000	4,000	3
55-59	126,000	3,000	2
60-64	89,000	2,000	2
65-69	66,000	2,000	2
70-74	47,000	1,000	2
75-79	41,000	1,000	3
80+	42,000	2,000	5
Total	**2,491,000**	**70,000**	**3**

The above numbers are not actual counts, but estimates of the actual counts. The estimates are calculated from data obtained from a nationally representative sample of crashes collected through NHTSA's General Estimates System (GES). Estimates should be rounded to the nearest 1,000.

Estimates less than 500 indicate that the sample size was too small to produce a meaningful estimate and should be rounded to 0.

Table 2
Nonoccupant Traffic Fatalities, 1997-2007

Year	Pedestrian	Pedalcyclist	Other	Total
1997	5,321	814	153	6,288
1998	5,228	760	131	6,119
1999	4,939	754	149	5,842
2000	4,763	693	141	5,597
2001	4,901	732	123	5,756
2002	4,851	665	114	5,630
2003	4,774	629	140	5,543
2004	4,675	727	130	5,532
2005	4,892	786	186	5,864
2006	4,795	772	185	5,752
2007	4,654	698	152	5,504

Pedestrian fatalities accounted for 85 percent of all nonoccupant fatalities in 2007. The 698 pedalcyclist fatalities accounted for 13 percent, and the remaining 3 percent were skateboard riders, roller skaters, etc.

"Thirty-six percent of all young (under age 16) pedestrian fatalities occurred between 3 and 7 p.m."

Time of Day and Day of Week

Thirty-six percent of the 354 young (under age 16) pedestrian fatalities occurred in crashes between 3 p.m. and 7 p.m.

Nearly one-half (48%) of all pedestrian fatalities occurred on Friday, Saturday, and Sunday (16%, 17%, and 15%, respectively).

Figure 2
Pedestrian Fatalities by Time of Day and Day of Week, 2007

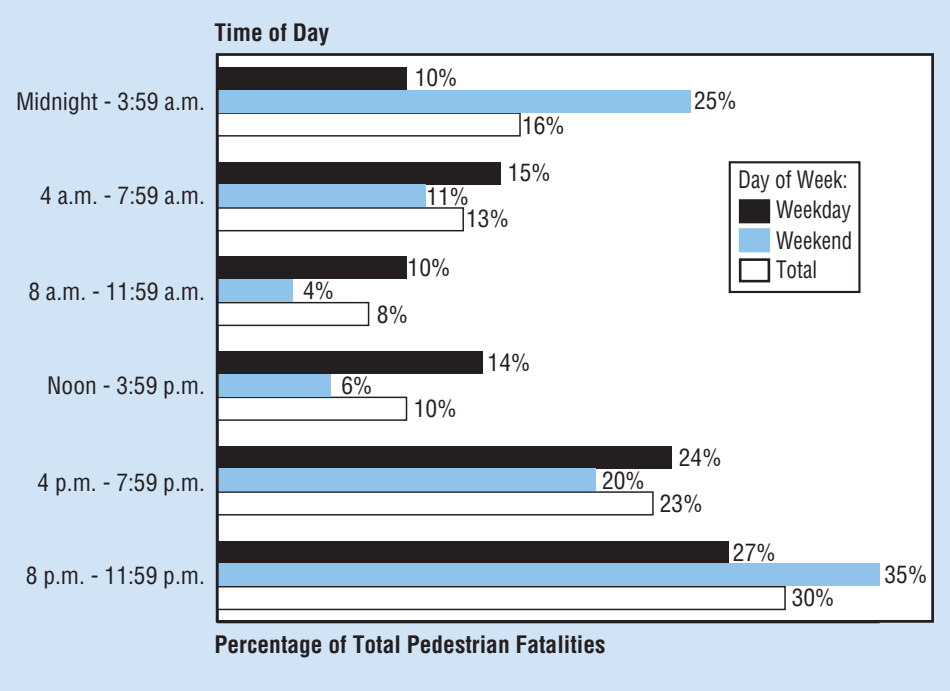

Important Safety Reminders

- Drivers are required to yield the right-of-way to pedestrians crossing streets in marked or unmarked crosswalks in most situations. Pedestrian need to be especially careful at intersections where the failure to yield right-of-way often occurs when drivers are turning onto another street and a pedestrian is in their path.
- When possible, cross the street at a designated crosswalk. Always stop and look left, right, and left again before crossing. If a parked vehicle is blocking the view of the street, stop at the edge line of the vehicle and look around it before entering the street.
- Increase visibility at night by carrying a flashlight when walking and by wearing retro-reflective clothing that helps to highlight body movement.
- It is much safer to walk on a sidewalk, but if you must walk in the street, walk facing traffic.

"Alcohol involvement — either for the driver or the pedestrian — was reported in 49 percent of all pedestrian fatalities."

Alcohol Involvement

Alcohol involvement — either for the driver or for the pedestrian — was reported in 49 percent of the traffic crashes that resulted in pedestrian fatalities. Of the pedestrians involved, 35 percent had a blood alcohol concentration (BAC) of .08 grams per deciliter (g/dL) or higher. Of the drivers involved in fatal crashes, only 14 percent had a BAC of .08 g/dL or higher, less than one-half the rate for the pedestrians. In 6 percent of the crashes, both the driver and the pedestrian had a BAC of .08 g/dL or higher.

Table 3

Alcohol Involvement in Fatal Pedestrian Crashes, 2007

	No Driver Alcohol Involvement		Driver Alcohol Involvement, BAC = .01-.07		Driver Alcohol Involvement, BAC = .08+		Total	
No Pedestrian Alcohol Involvement	51%		3%		7%		2,775	61%
Pedestrian Alcohol Involvement, BAC .01 – .07 g/dL	3%		0%		1%		198	4%
Pedestrian Alcohol Involvement, BAC ≥ .08 g/dL or Greater	27%		2%		6%		1,605	35%
Total	**3,694**	**81%**	**240**	**5%**	**644**	**14%**	**4,578**	**100%**

Note: The alcohol levels in this table are determined using the alcohol levels of the involved pedestrian fatalities and all the involved drivers (fatality and other)

Table 4

Alcohol Involvement for Pedestrians Killed in Fatal Crashes by Age, 1997 and 2007

Age (Years)	1997					2007				
	Number of Fatalities	% With BAC = .00	% With BAC = .01-.07	% With BAC = .08+	% With BAC = .01+	Number of Fatalities	% With BAC = .00	% With BAC = .01-.07	% With BAC = .08+	% With BAC = .01+
16-20	301	71	4	25	29	287	69	5	26	31
21-24	253	48	7	45	52	296	43	5	51	57
25-34	762	41	4	55	59	606	45	5	51	55
35-44	932	43	4	53	57	754	47	6	47	53
45-54	700	55	5	40	45	916	47	4	49	53
55-64	499	68	4	28	32	494	66	4	30	34
65-74	507	82	2	15	18	382	80	4	16	20
75-84	465	91	3	6	9	387	89	2	9	11
85 +	202	92	3	5	8	134	90	5	5	10
Total*	**4,621**	**61**	**4**	**35**	**39**	**4,256**	**58**	**5**	**37**	**42**

*Excludes pedestrians under 16 years old and pedestrians of unknown age.

Table 5

Pedestrians Killed and Injured and Fatality and Injury Rates by Age and Sex, 2007

Age (Years)	Male			Female			Total		
	Killed	Population (thousands)	Fatality Rate*	Killed	Population (thousands)	Fatality Rate*	Killed**	Population (thousands)	Fatality Rate*
<5	62	10,603	0.58	44	10,121	0.43	106	20,724	0.51
5-9	59	10,149	0.58	34	9,701	0.35	93	19,850	0.47
10-15	99	12,582	0.79	56	11,997	0.47	155	24,579	0.63
16-20	204	10,966	1.86	83	10,411	0.80	287	21,378	1.34
21-24	229	8,711	2.63	67	8,152	0.82	296	16,863	1.76
25-34	449	20,683	2.17	157	19,908	0.79	606	40,591	1.49
35-44	552	21,619	2.55	202	21,543	0.94	754	43,161	1.75
45-54	667	21,595	3.09	249	22,280	1.12	916	43,875	2.09
55-64	344	15,775	2.18	150	16,937	0.89	494	32,712	1.51
65-74	253	8,887	2.85	129	10,465	1.23	382	19,352	1.97
75-84	217	5,313	4.08	170	7,711	2.20	387	13,024	2.97
85 +	84	1,777	4.73	50	3,735	1.34	134	5,512	2.43
Unknown	40	0	0	4	0	0	44	0	0
Total	**3,259**	**148,659**	**2.19**	**1,395**	**152,962**	**0.91**	**4,654**	**301,621**	**1.54**

Age (Years)	Male			Female			Total		
	Injured	Population (thousands)	Injury Rate*	Injured	Population (thousands)	Injury Rate*	Injured	Population (thousands)	Injury Rate*
<5	1,000	10,603	12	1,000	10,121	9	2,000	20,724	10
5-9	3,000	10,149	32	2,000	9,701	17	5,000	19,850	25
10-15	4,000	12,582	33	5,000	11,997	40	9,000	24,579	37
16-20	3,000	10,966	27	5,000	10,411	50	8,000	21,378	38
21-24	3,000	8,711	39	3,000	8,152	34	6,000	16,863	37
25-34	7,000	20,683	33	3,000	19,908	17	10,000	40,591	25
35-44	5,000	21,619	21	4,000	21,543	17	8,000	43,161	19
45-54	7,000	21,595	30	3,000	22,280	15	10,000	43,875	23
55-64	3,000	15,775	18	2,000	16,937	14	5,000	32,712	16
65-74	2,000	8,887	17	1,000	10,465	12	3,000	19,352	14
75-84	2,000	5,313	34	1,000	7,711	15	3,000	13,024	23
85 +	0	1,777	13	0	3,735	7	0	5,512	9
Total	**39,000**	**148,659**	**26**	**31,000**	**152,962**	**20**	**70,000**	**301,621**	**23**

* Rate per 100,000 population
** Includes 44 fatalities of unknown sex
Note: Injuries fewer than 500 are rounded to zero.
Totals may not equal sum of components due to independent rounding.
Source: Population - Bureau of the Census projections

For more information:

Information on traffic fatalities is available from the National Center for Statistics and Analysis, NVS-424, 1200 New Jersey Avenue SE., Washington, DC 20590. NCSA can be contacted at 800-934-8517. Fax messages should be sent to 202-366-7078. General information on highway traffic safety can be accessed by Internet users at www.nhtsa.gov/portal/site/nhtsa/ncsa. To report a safety-related problem or to inquire about motor vehicle safety information, contact the Vehicle Safety Hotline at 888-327-4236.

Other fact sheets available from the National Center for Statistics and Analysis are *Overview, Alcohol, African American, Bicyclists and Other Cyclists (formerly titled Pedalcyclists), Children, Hispanic, Large Trucks, Motorcycles, Occupant Protection, Older Population, Race and Ethnicity, Rural/Urban Comparisons, School Transportation-Related Crashes, Speeding, State Alcohol Estimates, State Traffic Data, and Young Drivers.* Detailed data on motor vehicle traffic crashes are published annually in *Traffic Safety Facts: A Compilation of Motor Vehicle Crash Data from the Fatality Analysis Reporting System and the General Estimates System.* The fact sheets and annual Traffic Safety Facts report can be accessed online at www-nrd.nhtsa.dot.gov/CATS.

Table 6
Pedestrian Traffic Fatalities and Fatality Rates by State, 2007

State	Total Traffic Fatalities	Resident Population (thousands)	Pedestrian Fatalities	Percent of Total	Pedestrian Fatalities per 100,000 Population
Alabama	1,110	4,628	69	6.2	1.49
Alaska	84	683	14	16.7	2.05
Arizona	1,066	6,339	154	14.4	2.43
Arkansas	650	2,835	45	6.9	1.59
California	3,974	36,553	640	16.1	1.75
Colorado	554	4,862	58	10.5	1.19
Connecticut	277	3,502	31	11.2	0.89
Delaware	117	865	16	13.7	1.85
Dist of Columbia	44	588	19	43.2	3.23
Florida	3,214	18,251	531	16.5	2.91
Georgia	1,641	9,545	153	9.3	1.60
Hawaii	138	1,283	27	19.6	2.10
Idaho	252	1,499	17	6.7	1.13
Illinois	1,249	12,853	171	13.7	1.33
Indiana	898	6,345	59	6.6	0.93
Iowa	445	2,988	23	5.2	0.77
Kansas	416	2,776	20	4.8	0.72
Kentucky	864	4,241	44	5.1	1.04
Louisiana	985	4,293	107	10.9	2.49
Maine	183	1,317	10	5.5	0.76
Maryland	614	5,618	116	18.9	2.06
Massachusetts	417	6,450	61	14.6	0.95
Michigan	1,088	10,072	131	12.0	1.30
Minnesota	504	5,198	33	6.5	0.63
Mississippi	884	2,919	58	6.6	1.99
Missouri	992	5,878	79	8.0	1.34
Montana	277	958	15	5.4	1.57
Nebraska	256	1,775	8	3.1	0.45
Nevada	373	2,565	52	13.9	2.03
New Hampshire	129	1,316	13	10.1	0.99
New Jersey	724	8,686	149	20.6	1.72
New Mexico	413	1,970	52	12.6	2.64
New York	1,333	19,298	278	20.9	1.44
North Carolina	1,675	9,061	171	10.2	1.89
North Dakota	111	640	5	4.5	0.78
Ohio	1,257	11,467	107	8.5	0.93
Oklahoma	754	3,617	66	8.8	1.82
Oregon	455	3,747	48	10.5	1.28
Pennsylvania	1,491	12,433	151	10.1	1.21
Rhode Island	69	1,058	13	18.8	1.23
South Carolina	1,066	4,408	106	9.9	2.40
South Dakota	146	796	7	4.8	0.88
Tennessee	1,210	6,157	69	5.7	1.12
Texas	3,363	23,904	387	11.5	1.62
Utah	299	2,645	32	10.7	1.21
Vermont	66	621	4	6.1	0.64
Virginia	1,027	7,712	88	8.6	1.14
Washington	568	6,468	60	10.6	0.93
West Virginia	431	1,812	27	6.3	1.49
Wisconsin	756	5,602	58	7.7	1.04
Wyoming	150	523	2	1.3	0.38
U.S. Total	**41,059**	**301,621**	**4,654**	**11.3**	**1.54**
Puerto Rico	452	3,941	144	31.9	3.65

Note: Totals may not equal sum of components due to independent rounding.
Sources: Fatalities — Fatality Analysis Reporting System, NHTSA. Population — Bureau of the Census.

Traffic Safety Facts

2008 Data

NHTSA
www.nhtsa.gov

DOT HS 811 156

Bicyclists and Other Cyclists

Bicyclists and other cyclists include riders of two-wheel nonmotorized vehicles, tricycles, and unicycles powered solely by pedals. Throughout the remainder of this fact sheet the term pedalcyclists will be used to identify these cyclists.

The first automobile crash in the United States occurred in New York City in 1896, when a motor vehicle collided with a pedalcycle rider (Famous First Facts, by Joseph Kane). About 53,000 pedalcyclists have died in traffic crashes in the United States since 1932 — the first year in which estimates of pedalcyclist fatalities were recorded. The 350 pedalcyclists killed in 1932 accounted for 1.3 percent of the 27,979 persons who died in traffic crashes that year.

"The 716 bicyclist deaths in 2008 accounted for 2 percent of all traffic fatalities during the year."

In 2008, 716 pedalcyclists were killed and an additional 52,000 were injured in traffic crashes. Pedalcyclist deaths accounted for 2 percent of all traffic fatalities, and pedalcyclists made up 2 percent of all the people injured in traffic crashes during the year.

The number of pedalcyclist fatalities in 2008 is 6 percent lower than the 760 fatalities reported in 1998. The highest number of pedalcyclist fatalities ever recorded in the Fatality Analysis Reporting System (FARS) was 1,003 in 1975. Pedalcyclists accounted for 14 percent of all nonoccupant traffic fatalities in 2008.

Figure 1
Total Pedalcyclist Fatalities, 1998-2008

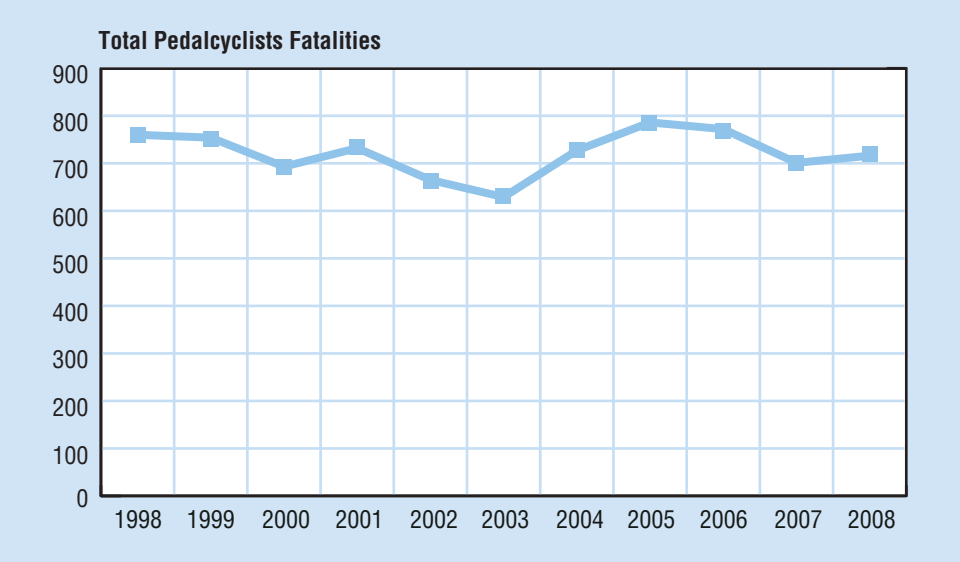

Table 1
Nonoccupant Traffic Fatalities, 1998-2008

Year	Pedalcyclist	Pedestrian	Other	Total
1998	760	5,228	131	6,119
1999	754	4,939	149	5,842
2000	693	4,763	141	5,597
2001	732	4,901	123	5,756
2002	665	4,851	114	5,630
2003	629	4,774	140	5,543
2004	727	4,675	130	5,532
2005	786	4,892	186	5,864
2006	772	4,795	185	5,752
2007	701	4,699	158	5,558
2008	716	4,378	188	5,282

Pedalcyclist fatalities occurred more frequently in urban areas (69%), at non-intersection locations (64%), between the hours of 5 p.m. and 9 p.m. (28%), and during the months of June (9%) and September (12%).

"One-seventh of the pedalcyclists killed in traffic crashes in 2008 were between 5 and 15 years old."

Age

In 1998, the average age of pedalcyclists killed in traffic crashes was 32; in 2008 the average age of those killed was 41. In contrast, in 1998 the average age of those injured was 24 and the average age of those injured in 2008 was 31.

Table 2
Average Age of Pedalcyclists Killed and Injured, 1998-2008

Year	Pedalcyclists Killed Average Age	Pedalcyclists Injured Average Age
1998	32	24
1999	33	24
2000	35	25
2001	36	26
2002	37	28
2003	36	27
2004	39	29
2005	39	29
2006	41	30
2007	40	31
2008	41	31
1998-2008	**37**	**28**

Pedalcyclists under age 16 accounted for 13 percent of all pedalcyclists killed and 25 percent of those injured in traffic crashes in 2008. By comparison, pedalcyclists under age 16 accounted for 30 percent of all those killed and 44 percent of those injured in 1998.

Pedalcyclists age 25 and older have made up an increasing proportion of all pedalcyclist deaths since 1998. The proportion of pedalcyclist fatalities age 25 to 64 was 1.3 times higher in 2008 as in 1998 (64% and 50%, respectively).

About one-seventh (12%) of the pedalcyclists killed in traffic crashes in 2008 were between 5 and 15 years old. The pedalcyclist fatality rate for this age group in 2008 was 2.01 per million population — about 14 percent lower than the rate for all pedalcyclists (2.35 per million population). The injury rate for this age group was 293 per million population, compared with 172.3 per million population for pedalcyclists of all ages.

Alcohol-Related Data

Alcohol involvement — either for the driver or the pedalcyclist — was reported in more than one-third (37%) of the traffic crashes that resulted in pedalcyclist fatalities in 2008. In 31 percent of the crashes, either the driver or the pedalcyclist was reported to have a blood alcohol concentration (BAC) of .08 grams per deciliter (g/dL) or higher. Lower alcohol levels (BAC .01 to .07 g/dL) were reported in an additional 8 percent of crashes. Over one-fourth (28%) of the pedalcyclists killed had a BAC of .01 g/dL or higher, and nearly one-fourth (23%) had a BAC of .08 g/dL or higher.

"Alcohol involvement was reported in more than one-third of all pedalcyclist fatalities in 2008."

Gender

Most of the pedalcyclists killed or injured in 2008 were males (87% and 79%, respectively), and most were between the ages of 5 and 44 (48% and 77%, respectively).

In 2008, the pedalcyclist fatality rate per capita was eight times higher for males than for females, and the injury rate per capita was more than four times higher for males.

Table 3

Pedalcyclists Killed and Injured and Fatality and Injury Rates by Age and Sex, 2008

Age (Years)	Male			Female			Total		
	Killed	Population (thousands)	Fatality Rate*	Killed	Population (thousands)	Fatality Rate*	Killed	Population (thousands)	Fatality Rate*
<5	5	10,748	0.47	1	10,258	0.10	6	21,006	0.29
5-9	13	10,259	1.27	10	9,806	1.02	23	20,065	1.15
10-15	55	12,415	4.43	11	11,839	0.93	66	24,255	2.72
16-20	47	11,039	4.26	5	10,492	0.48	52	21,531	2.42
21-24	37	8,681	4.26	5	8,162	0.61	42	16,842	2.49
25-34	61	20,900	2.92	13	20,032	0.65	74	40,932	1.81
35-44	77	21,314	3.61	13	21,187	0.61	90	42,501	2.12
45-54	161	21,853	7.37	19	22,519	0.84	180	44,372	4.06
55-64	103	16,251	6.34	9	17,436	0.52	112	33,686	3.32
65-74	34	9,265	3.67	2	10,858	0.18	36	20,123	1.79
75-84	21	5,336	3.94	3	7,689	0.39	24	13,025	1.84
85+	5	1,864	2.68	2	3,858	0.52	7	5,722	1.22
Total	**623**	**149,925**	**4.16**	**93**	**154,135**	**0.60**	**716**	**304,060**	**2.35**
Age (Years)	**Male**			**Female**			**Total**		
	Injured	**Population (thousands)**	**Injury Rate***	**Injured**	**Population (thousands)**	**Injury Rate***	**Injured**	**Population (thousands)**	**Injury Rate***
<5	0	10,748	8.01	**	10,258	3.49	**	21,006	5.80
5-9	2,000	10,259	235.8	1,000	9,806	54.56	3,000	20,065	147.2
10-15	7,000	12,415	579.7	3,000	11,839	221.9	10,000	24,255	405.1
16-20	7,000	11,039	601.1	2,000	10,492	150.9	8,000	21,531	381.7
21-24	4,000	8,681	409.4	2,000	8,162	203.7	5,000	16,842	309.7
25-34	5,000	20,900	239.1	2,000	20,032	93.13	7,000	40,932	167.7
35-44	5,000	21,314	237.5	2,000	21,187	103.0	7,000	42,501	170.5
45-54	5,000	21,853	232.0	1,000	22,519	40.20	6,000	44,372	134.7
55-64	4,000	16,251	218.4	**	17,436	17.42	4,000	33,686	114.4
65-74	1,000	9,265	127.7	**	10,858	3.71	1,000	20,123	60.80
75-84	1,000	5,336	141.7	**	7,689	7.12	1,000	13,025	62.24
85+	**	1,864	47.48	**	3,858	0.00	**	5,722	15.46
Total	**41,000**	**149,925**	**270.8**	**12,000**	**154,135**	**76.54**	**52,000**	**304,060**	**172.3**

* Rate per million population.
** Less than 500 injured.
Source: Population — Bureau of the Census projections.

Table 4

Pedalcyclist Traffic Fatalities and Fatality Rates by State, 2008

State	Total Traffic Fatalities	Resident Population (thousands)	Pedalcyclist Fatalities	Percent of Total	Pedalcyclist Fatalities per Million Population
Alabama	966	4,662	4	0.4	0.86
Alaska	62	686	1	1.6	1.46
Arizona	937	6,500	19	2.0	2.92
Arkansas	600	2,855	5	0.8	1.75
California	3,434	36,757	109	3.2	2.97
Colorado	548	4,939	12	2.2	2.43
Connecticut	264	3,501	5	1.9	1.43
Delaware	121	873	6	5.0	6.87
District of Columbia	34	592	1	2.9	1.69
Florida	2,978	18,328	125	4.2	6.82
Georgia	1,493	9,686	20	1.3	2.06
Hawaii	107	1,288	2	1.9	1.55
Idaho	232	1,524	2	0.9	1.31
Illinois	1,043	12,902	27	2.6	2.09
Indiana	814	6,377	18	2.2	2.82
Iowa	412	3,003	5	1.2	1.67
Kansas	385	2,802	6	1.6	2.14
Kentucky	826	4,269	6	0.7	1.41
Louisiana	912	4,411	11	1.2	2.49
Maine	155	1,316	4	2.6	3.04
Maryland	591	5,634	6	1.0	1.07
Massachusetts	363	6,498	10	2.8	1.54
Michigan	980	10,003	25	2.6	2.50
Minnesota	456	5,220	13	2.9	2.49
Mississippi	783	2,939	4	0.5	1.36
Missouri	960	5,912	3	0.3	0.51
Montana	229	967	3	1.3	3.10
Nebraska	208	1,783	0	0	0
Nevada	324	2,600	7	2.2	2.69
New Hampshire	139	1,316	2	1.4	1.52
New Jersey	590	8,683	20	3.4	2.30
New Mexico	366	1,984	7	1.9	3.53
New York	1,231	19,490	42	3.4	2.15
North Carolina	1,433	9,222	32	2.2	3.47
North Dakota	104	641	1	1.0	1.56
Ohio	1,190	11,486	18	1.5	1.57
Oklahoma	749	3,642	4	0.5	1.10
Oregon	416	3,790	10	2.4	2.64
Pennsylvania	1,468	12,448	8	0.5	0.64
Rhode Island	65	1,051	1	1.5	0.95
South Carolina	920	4,480	14	1.5	3.13
South Dakota	119	804	0	0	0
Tennessee	1,035	6,215	7	0.7	1.13
Texas	3,382	24,327	53	1.6	2.18
Utah	275	2,736	4	1.5	1.46
Vermont	73	621	0	0	0
Virginia	824	7,769	13	1.6	1.67
Washington	521	6,549	9	1.7	1.37
West Virginia	380	1,814	2	0.5	1.10
Wisconsin	605	5,628	9	1.5	1.60
Wyoming	159	533	1	0.6	1.88
U.S. Total*	**37,261**	**304,060**	**716**	**1.9**	**2.35**
Puerto Rico	399	3,954	12	3.0	3.03

* Totals may not equal sum of components due to independent rounding.
Sources: Fatalities — Fatality Analysis Reporting System, NHTSA. Population — Bureau of the Census.

Important Safety Reminders

All bicyclists should wear properly fitted bicycle helmets every time they ride. A helmet is the single most effective way to prevent head injury resulting from a bicycle crash.

Bicyclists are considered vehicle operators; they are required to obey the same rules of the road as other vehicle operators, including obeying traffic signs, signals, and lane markings. When cycling in the street, cyclists must ride in the same direction as traffic.

Drivers of motor vehicles need to share the road with bicyclists. Be courteous – allow at least three feet clearance when passing a bicyclist on the road, look for cyclists before opening a car door or pulling out from a parking space, and yield to cyclists at intersections and as directed by signs and signals. Be especially watchful for cyclists when making turns, either left or right.

Bicyclists should increase their visibility to drivers by wearing fluorescent or brightly colored clothing during the day, dawn, and dusk. To be noticed when riding at night, use a front light and a red reflector or flashing rear light, and use retro-reflective tape or markings on equipment or clothing.

For more information:

Information on traffic fatalities is available from the National Center for Statistics and Analysis, NVS-424, 1200 New Jersey Avenue SE., Washington, DC 20590. NCSA can be contacted at 800-934-8517. Fax messages should be sent to 202-366-7078. General information on highway traffic safety can be accessed by Internet users at www.nhtsa.gov/portal/site/nhtsa/ncsa. To report a safety-related problem or to inquire about motor vehicle safety information, contact the Vehicle Safety Hotline at 888-327-4236.

Other fact sheets available from the National Center for Statistics and Analysis are *Overview, Alcohol, African American, Children, Hispanic, Large Trucks, Motorcycles, Occupant Protection, Older Population, Pedestrians, Race and Ethnicity, Rural/Urban Comparisons, School Transportation-Related Crashes, Speeding, State Alcohol Estimates, State Traffic Data*, and *Young Drivers.* Detailed data on motor vehicle traffic crashes are published annually in *Traffic Safety Facts: A Compilation of Motor Vehicle Crash Data from the Fatality Analysis Reporting System and the General Estimates System.* The fact sheets and annual Traffic Safety Facts report can be accessed online at www-nrd.nhtsa.dot.gov/CATS/index.aspx.

It's obvious that the matrix can be interpreted in many ways with much different outcomes. I think it is a great tool, however, the numbers (and the item weighting) should be based on as much factual data as possible, rather than subjective 'guessing'. I worked on it as well and the only 'facts' I had were the cost estimates for the construction. So I based the numbers on those costs. We should also us what facts we have for users and their weighting (ie – based on item weight, maintenance vehicles are 1 out of every ten users). We should survey the trail users to find out usability and aesthetics numbers. Safety may have to be subjective, although I found some accident data for bicycles and roads (however the bikes were on roads as well). One interesting fact was that in accidents resulting in death where a bike crossed a road at an intersection, 38% of the accidents the cyclist has STOPPED at the intersection before proceeding. Also, 1 in 8 deaths were children between 5-15 years of age. I put lower numbers for the at grade crossing and higher ones in the separated. I attached my version as well. Like I said, more facts should be gathered to be less subjective, but it is a good tool.

Rob Hehlen

George – sorry you are getting this twice.

Functional Design Criteria

Dear Scott,

Attached is a MSWord document with my comments on the proposed Peavine Trail - Road 39 interchange. I support Option 2 (Peavine Trail Overpass), but without the bypass road. I oppose Option 1 - at-grade crossing.

In reviewing the documents through the link on the City's website, I noticed that there is not a direct link to send you comments on the proposal. The link that asks for comments goes to Steve Graber and is for bicycles. Placing the Peavine Trail/Road 39 documents in this area might confuse people trying to comment on the proposal by sending comments to Steve. You should have your own area for the plan and a direct link to you for public comments.

Sincerely,

Bruce McKeeman
3075 Cabezon Lane
Prescott, AZ 86301
928.771.0784

Peavine Trail Crossing Design Alternatives for Granite Dells Estates Proposed Road 39.

In review of the published proposal, I have several comments and concerns.

Page 7/8 - Number of Users: states that Road 39 traffic would be at a minimum on weekends due to the nature of commercial/industrial businesses.

The Granite Dells Estates Preliminary Land-Use Plan shows that 60% of the acreage is residential and 15% is commercial/industrial. A residential development will not have limited traffic on weekends when trail use is the highest. In fact, the road traffic will be much higher on weekends with this level of development.

The next paragraph states that since the parking area at near SR 89A will have fewer parking slots than the Sundog trailhead, there will be fewer users at this end of the trail.

This assumption does not account for the 60% residential development of Granite Dells Estates or for the residents in Pinon Oaks, the golf course development and other residential areas at the north end of Prescott that would likely use the new trailhead once it is developed. There is no basis of fact to support your contention that this trailhead will see less use simply because it has fewer parking slots.

Page 10 – Vertical Clearance: states that the underpass should match the existing underpass at SR 89A to maintain a consistent experience for users.

This point is immaterial. The trail users will not notice any difference if the culvert is 12 feet or 15 feet in height. Only if the Road 39 culvert were to be much larger would there be any noticeable difference and even then it would not affect the trail experience. If you need to justify the size of culvert you chose, you should simply state that you made them the same size or you should cite the standard used to make this decision.

Page 11 – Traffic Volumes: states that these volumes are based on a commercial/industrial development.

The Granite Dells Estates Preliminary Land-Use Plan shows that 60% of the acreage is residential and 15% is commercial/industrial. The traffic study and report are based on a commercial development and do not account for the increase in traffic volume that the much larger residential development will bring to this road and crossing. This makes the stated volumes inconsistent with the proposed development. Since this report projects traffic to the year 2030, the entire development must be included which will present a much greater hazard to trail users for an at-grade crossing. This may change the level of service requirements.

Page 12 – Option 1 – At-Grade: states that this option requires users to use good judgment to avoid conflicts.

This does not take into account young trail users or teenagers all of whom generally do not think about possible dangers or hazards or use good judgment in their activities. This may be appropriate for adults, but will not work with youth. This point on the trail will be the first major hazard trail users will encounter as they travel north on the trail. It is not appropriate to place this level of hazard on the trail users.

Page 13 – Impacts: states that trail users will be required to stop … before proceeding, similar to the Storm Ranch Road at-grade crossing.

This statement is absolutely FALSE in regards to the stop requirements at the Storm Ranch crossing. If you look at your picture on page 6, you will see stop signs for BOTH trail users AND vehicles. The Storm Ranch at-grade crossing is a 4 WAY STOP!!! This would be appropriate for this crossing as well. In fact this is the safest means of handling any at-grade crossing of this trail. The comparison to the Storm Ranch crossing is inappropriate since Storm Ranch is a dirt road with minimal traffic and slow speeds. It certainly is not a 50 foot wide paved roadway with a speed limit of 35 mph which means traffic is traveling at least at 45 mph creating a much greater hazard to trail users.

Page 14 – Option 2 – Grade Separated-Peavine Overpass: includes a bypass alternative to access Road 39.

The bypass/access ramp to Road 39 is completely extraneous and adds over $28,000 to the cost of the option. Since this intersection is less than a mile from the Centrepoint East intersection which includes an at-grade component for ADA and equestrian users, an additional access at this point is not necessary. In addition, the bridge is being designed to allow maintenance vehicles to cross it. This should be sufficient for any maintenance or emergency needs to access areas south of this point.

Page 15 – Key Components: states that the separate bypass trail “had to be” included in the design.

The City and Lyons may have wanted to include the bypass as a convenience, but there is nothing in the statutes, laws, or standards that REQUIRES the bypass to be included. This is not a

requirement, but an option of the designers. Please cite the legal statute which requires this to be included. Again, at-grade trail access is available less than one mile from this location.

Page 16 – Phasing: states the bridge and abutments could be built in the future without negatively impacting the functionality of Road 39.

This may in fact be true, but why haven't you considered the impacts on the trail users. The trail is currently in use and available to the public. This is a nationally acknowledged trail and the functionality of it for trail users deserves an equal consideration. Phasing will negatively affect trail users and increase the inherent danger of at-grade crossings.

Page 26 – Maintenance: states that regular trail maintenance should be completed …

Please explain what this entire paragraph has to do with the proposed alternatives for the Road 39/Peavine Trail crossing. The purpose of the report is to present the crossing alternatives. The status of maintenance on the rest of the trail is not germane to the purpose of the report.

Page 29 and Appendix D – Matrix Values: An at-grade crossing is the recommended solution.

The assignment of weighting is understood and accepted. The subjective nature of the scores raises concern and possible deception of the selected preferred alternative. It is disconcerting that the City and Lyons did not openly state that Lyons is also the engineer for the developer and thus has a conflict of interest in making a recommendation that is favorable for the developer and is not providing an unbiased review of the possible options to resolve concerns of all users.

The scoring for the at-grade option should be adjusted as follows:

Safety of trail users – 6. The adjusted weight should be 18. This is a major roadway with a high rate of speed of vehicles (35 to 45 mph) and is a major safety hazard for all trail users, but particularly for youth. It is not a marginally less safe option as indicated by a score of 1 less than a grade separated crossing.

Usability for bicycles – 7. This should be the same as for other trail users. The at-grade crossing is not any more usable for bicycles than for any other user. In fact it may be less usable for bicyclists than for other users. It certainly is not any more usable placing a 50 foot wide 35 mph roadway in the path of trail users.

These two adjustments provide a total score of 78.7 and it could arguably be less.

The scoring for the grade separated overpass should be adjusted as follows:

Usability for bicycles – 7. The proposed incline to make the overpass ADA compatible does not incur a reduction of 3 points from other trail users. The minor inconvenience for bicyclists should only drop the score by a point in comparison to other users.

This adjustment provides a total score of 78.1 which is on par with Option 1. Minor adjustments to either option would make either one on par with the other.

Appendix F – Cost Estimates

> Option 2 should be presented with and without the bypass option. As stated earlier, the bypass is completely unnecessary and thus presents an added cost that makes comparison with other options more difficult. The fact that the City or Lyons wanted a bypass, which is not required by law, it should not be presented as part of the basic option. The bypass should be split out as option 2A so that the public can compare options on an equitable basis. The bypass appears to add an extra $28,036 to option 2. Thus the basic cost for option 2 should be $325,179

In summary, I request that Option 2 – Peavine Trail overpass be the selected option to deal with issues at the Peavine Trail/Road 39 intersection. This option provides the safest intersection for both trail and road users. This option should not be phased and it should not include the additional expense of the bypass. In addition, the City Council needs to adopt a policy to prohibit any at-grade crossing of the Peavine Trail. As development agreements and annexations continue in proximity to the Peavine Trail, it should be made explicitly clear that there will not be any at-grade crossing permitted.

Bruce McKeeman
3075 Cabezon Lane
Prescott, AZ 86301

Attention: Scott Tkach
I am a frequent user of the Peavine trail, both walking and horseback riding. From that perspective, Option 2 is the best alternative for the Rd. 39 crossing. It also is efficient for vehicular traffic on the road.

From: Susan Brook

Attention: Scott Tkach
Scott, my husband and I bike the Peavine, Iron King, Side Road trails up to 5x a week. We have come to know a good number of like enthusiasts over a 3 year period. There is now a wonderful community feel when out there getting exercise. It is a unique feature in Prescott. My preference to any extension or crossing is the "overpass" type for three reasons. "At grade" crossings will have accidents. Culverts have drainage issues such as the one under Glassford Hill Rd to the designated parking lot which no one uses. Thirdly, I prefer being out in the open and a raised crossing creates different views. If a culvert becomes the best option for cost and implementation, its design for drainage needs to be carefully considered. Otherwise it is a collection point for debris and mud. Thank you and good luck with improving and especially extending the trail. Diane Flannery

From: Diane Flannery

Tara. Would you be able to provide the budgetary costs of components requiring additional bridge resources? When you did the initial site survey we looked at the damaged trestle over Granite Creek that has been damaged and out of service since about 1984.There must have been a reason why that put crushed rock along the track area. if if is !8" thick and 12 ft wide, then the rock would weigh 1 ton per foot.Does this level of weight actually help to stabiliize the bridge?

The budget items from Contech-cpi. I measured the remaining wooden portion to be about 420 feet. What would the cost be for 900 feet of side rail for the platform to elevate 8 feet in height and has an

arched railraod theme appearance? With Equiestrian riders, starting at an 8 feet height should be considered if the rider is remaining on the horse. I would assume with the 8 foot height you would have side angled supports for the 8 foot uprights, which would be bolted through the heavy wooden platform.

Next cost item would span the 100' open space between end of the remaining bridge and the Peavine. We can use existing componenet pricing to estimate this cost. The Trucks will require the minimum bridge clearance to b 17'. As a result of 'compatibility' design the steel truss bridge would likely include may of the design elements in the others.

G

Eric. Do we have measurements for the length of the remaining trestle and then from the trestle north to the Peavine by the horse doctor? We can price out the side rails which should be at least 60" and preferably 6' or higher for the equestrian riders. Tom Devereaux thought the road to Hanson Cement could be lowered and drainage routed toward Granite Creek, so the Steel Truss bridge connector would not need to be raised above the level of the trestle for the industrial traffic below. We can also price out a truss bridge and cement abutments, which should be around $200K total. There shouldn't be much dirt fill needed since the Peavine and Trestle are already high compared to the road below.

George

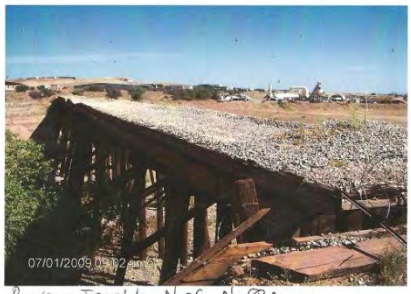

Peavine Trestle N of New 89A

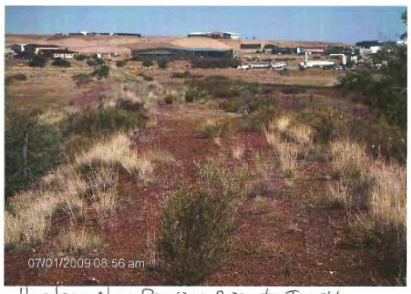

Heading N on Peavine Prior to Trestle

Nend of Peavine Looking S. E of Corner Melville

Peavine Trestle N of New 89A

The attached photo shows the west box culvert looking south which passes under Highway 89A. It is a 12' X 12' cement box culvert that is approximately 440 feet in length. I does appear to have electrical lighting. There are vehicle an cattle tracks in the culvert. The south end of the tunnel had 4 bulls hoping I would venture into their space! I guess the ranch and area wildlife are able to use the culvert. It appears to be in very good condition and able to provide the connection so the Peavine to be connected and improved to the north as was originally planned.

George Sheats

Peavine Crossings Engineering Team. The attached are various Truss Bridge cost estimates provided by Big R Bridge from Colorado. As we know the abutment and associated costs are the larger portions of a pedestrian bridge project, however these costs can be carefullly managed to fit the application. By lowering the street passing under the bridge and applying ADA packed surface guidelines consistent with the rest of the Peavine Trail, the installation costs can be reduced significantly. The 3 truss bridge companies contacted can design the abutments and associated support structure after a geotech soil survey is provided, and certify the strengths and future stability.

Thanks.

George Sheats

NOTE: THE ATTACHMENT INCLUDED IN THE CORRESPONDENCE ABOVE IS SHOWN ON THE FOLLOWING PAGE

P.O. Box 1290
Greeley, Colorado
80632-1290
Phone. 970-356-9600
Toll Free. 800-234-0734
Fax. 970-356-9621
www.bigrbridge.com

Budget Estimate

Quotation Date:	7/1/2009
Bid Date:	_____
Expiration Date:	8/1/2009
Opportunity No.:	2009-02418

PROJECT: Peavine Trail 75' - Prescott, AZ

George Sheats
City of Prescott
1242 Crown Ridge Dr
Prescott, AZ 86301

Phone: (602) 361-7857
Email: gsheats@aol.com

Item	Description	Quantity	Unit Price	Total Price
1	**12' Wide Douglas Fir Deck Option.** 75' long by 12' wide (clear between structural members); one-piece prefabricated Weathering Steel Truss - H Section pedestrian bridge superstructure. Design is for a 12,000 LBS. vehicle or an 85 PSF live load with a single diagonal per panel. Bridge design in accordance with AASHTO Guide Specification. Bridge includes Horizontal Rails 54 INCHES high with 4" maximum openings, and a steel toe plate. Treated Douglas Fir bridge decking will be shop-installed prior to delivery. Superstructure with the Douglas Fir deck weighs approximately 35,000 lbs.	2 ea.	$58,730.00 Includes Freight	$117,460.00
2	**12' Wide Concrete Deck Option.** Same design/features as item one above except that: Deck forms will be shop-installed ready to receive a field-poured reinforced concrete deck by others in lieu of the Douglas Fir Decking. Superstructure without the concrete weighs approximately 23,500 lbs.	2 ea.	$48,220.00 Includes Freight	$96,440.00
3	**16' Wide Douglas Fir Deck Option.** 125' long by 16' wide (clear between structural members); two-piece prefabricated Weathering Steel Truss - H Section pedestrian bridge superstructure. Design is for a 12,000 LBS. vehicle or an 85 PSF live load with a single diagonal per panel. Bridge design in accordance with AASHTO Guide Specification. Bridge includes Horizontal Rails 54 INCHES high with 4" maximum openings, and a steel toe plate. Treated Douglas Fir bridge decking will be shipped loose to be field installed by others. Superstructure with the Douglas Fir deck weighs approximately 52,500 lbs.	2 ea.	$92,105.00 Includes Freight	$184,210.00
4	**16' Wide Concrete Deck Option.** Same design/features as item one above except that: Deck forms will be shop-installed ready to receive a field-poured reinforced concrete deck by others in lieu of the Douglas Fir Decking. Superstructure without the concrete weighs approximately 35,500 lbs.	2 ea.	$77,750.00 Includes Freight	$155,500.00

P.O. Box 1290
Greeley, Colorado
80632-1290
Phone. 970-356-9600
Toll Free. 800-234-0734
Fax. 970-356-9621
www.bigrbridge.com

5	**Powder Coated Mesh Panels.** For 2" x 2" powder coated mesh panels 6' high shop installed prior to shipping in lieu of horizontal rails and toe plate; add to above numbers.	1 ea	Lump Sum Per bridge	$14,145.00
6	**Abutment Design:**	1 ea	Lump Sum	$8,000.00

AASHTO Bridge Specifications require steel fabricators to be certified under the AISC Quality Certification Program. Big R Bridge is certified for Simple and Major Steel Bridges with a Fracture Critical and Sophisticated Paint Endorsement.

The following items are not included with this bid:

- third-party inspection of bridge during fabrication,
- design, excavation and construction of bridge abutments,
- anchor bolt supply and installation,
- unloading and assembly of bridge at the project site,
- supply and placement of reinforced concrete deck (if applicable).

Prices are FOB: Trucks, **Prescott, Arizona.** Delivery will be to a common stockpile accessible by standard highway tractor-trailer, buyer to unload and assemble. Shop drawings will be provided, signed and sealed by a Professional Engineer registered in the state of manufacture. Prices do not include sales tax (if applicable).

P.O. Box 1290
Greeley, Colorado
80632-1290
Phone. 970-356-9600
Toll Free. 800-234-0734
Fax. 970-356-9621
www.bigrbridge.com

Budget Estimate

Quotation Date:	7/1/2009
Bid Date:	_____
Expiration Date:	8/1/2009
Opportunity No.:	2009-02417

PROJECT: Peavine Trail 100' - Prescott, AZ

George Sheats
City of Prescott
1242 Crown Ridge Dr
Prescott, AZ 86301

Phone: (602) 361-7857
Email: gsheats@aol.com

Item	Description	Quantity	Unit Price	Total Price
1	**12' Wide Douglas Fir Deck Option.** 100' long by 12' wide (clear between structural members); two-piece prefabricated Weathering Steel Truss - H Section pedestrian bridge superstructure. Design is for a 12,000 LBS. vehicle or an 85 PSF live load with a single diagonal per panel. Bridge design in accordance with AASHTO Guide Specification. Bridge includes Horizontal Rails 54 INCHES high with 4" maximum openings, and a steel toe plate. Treated Douglas Fir bridge decking will be shop-installed prior to delivery. Superstructure with the Douglas Fir deck weighs approximately 46,000 lbs.	2 ea.	$81,450.00 Includes Freight	$162,900.00
2	**12' Wide Concrete Deck Option.** Same design/features as item one above except that: Deck forms will be shop-installed ready to receive a field-poured reinforced concrete deck by others in lieu of the Douglas Fir Decking. Superstructure without the concrete weighs approximately 35,000 lbs.	2 ea.	$71,950.00 Includes Freight	$143,900.00
3	**16' Wide Douglas Fir Deck Option.** 100' long by 16' wide (clear between structural members); four-piece prefabricated Weathering Steel Truss - H Section pedestrian bridge superstructure. Design is for a 12,000 LBS. vehicle or an 85 PSF live load with a single diagonal per panel. Bridge design in accordance with AASHTO Guide Specification. Bridge includes Horizontal Rails 54 INCHES high with 4" maximum openings, and a steel toe plate. Treated Douglas Fir bridge decking will be shipped loose to be field installed by others. Superstructure with the Douglas Fir deck weighs approximately 66,500 lbs.	2 ea.	$123,740.00 Includes Freight	$247,480.00
4	**16' Wide Concrete Deck Option.** Same design/features as item one above except that: Deck forms will be shop-installed ready to receive a field-poured reinforced concrete deck by others in lieu of the Douglas Fir Decking. Superstructure without the concrete weighs approximately 50,000 lbs.	2 ea.	$113,655.00 Includes Freight	$227,310.00

P.O. Box 1290
Greeley, Colorado
80632-1290
Phone. 970-356-9600
Toll Free. 800-234-0734
Fax. 970-356-9621
www.bigrbridge.com

5	**Powder Coated Mesh Panels.** For 2" x 2" powder coated mesh panels 6' high shop installed prior to shipping in lieu of horizontal rails and toe plate; add to above numbers.	1 ea	$18,865.00 Lump Sum per bridge	$37,730.00
6	**Abutment Design:**	1 ea	Lump Sum/per bridge	$8,000.00

AASHTO Bridge Specifications require steel fabricators to be certified under the AISC Quality Certification Program. Big R Bridge is certified for Simple and Major Steel Bridges with a Fracture Critical and Sophisticated Paint Endorsement.

The following items are not included with this bid:

- third-party inspection of bridge during fabrication,
- design, excavation and construction of bridge abutments,
- anchor bolt supply and installation,
- unloading and assembly of bridge at the project site,
- supply and placement of reinforced concrete deck (if applicable).

Prices are FOB: Trucks, **Prescott, Arizona.** Delivery will be to a common stockpile accessible by standard highway tractor-trailer, buyer to unload and assemble. Shop drawings will be provided, signed and sealed by a Professional Engineer registered in the state of manufacture. Prices do not include sales tax (if applicable).

P.O. Box 1290
Greeley, Colorado
80632-1290
Phone. 970-356-9600
Toll Free. 800-234-0734
Fax. 970-356-9621
www.bigrbridge.com

Budget Estimate

Quotation Date:	7/12009
Bid Date:	_____
Expiration Date:	8/1/2009
Opportunity No.:	2009-02411

PROJECT: Peavine Trail 125' - Prescott, AZ

George Sheats
City of Prescott
1242 Crown Ridge Dr
Prescott, AZ 86301

Phone: (602) 361-7857
Email: gsheats@aol.com

Item	Description	Quantity	Unit Price	Total Price
1	**12' Wide Douglas Fir Deck Option.** 125' long by 12' wide (clear between structural members); two-piece prefabricated Weathering Steel Truss - H Section pedestrian bridge superstructure. Design is for a 12,000 LBS. vehicle or an 85 PSF live load with a single diagonal per panel. Bridge design in accordance with AASHTO Guide Specification. Bridge includes Horizontal Rails 54 INCHES high with 4" maximum openings, and a steel toe plate. Treated Douglas Fir bridge decking will be shop-installed prior to delivery. Superstructure with the Douglas Fir deck weighs approximately 70,500 lbs.	2 ea.	$115,850.00 Includes Freight	$231,700.00
2	**12' Wide Concrete Deck Option.** Same design/features as item one above except that: Deck forms will be shop-installed ready to receive a field-poured reinforced concrete deck by others in lieu of the Douglas Fir Decking. Superstructure without the concrete weighs approximately 60,500 lbs.	2 ea.	$113,055.00 Includes Freight	$226,110.00
3	**16' Wide Douglas Fir Deck Option.** 125' long by 16' wide (clear between structural members); four-piece prefabricated Weathering Steel Truss - H Section pedestrian bridge superstructure. Design is for a 12,000 LBS. vehicle or an 85 PSF live load with a single diagonal per panel. Bridge design in accordance with AASHTO Guide Specification. Bridge includes Horizontal Rails 54 INCHES high with 4" maximum openings, and a steel toe plate. Treated Douglas Fir bridge decking will be shipped loose to be field installed by others. Superstructure with the Douglas Fir deck weighs approximately 98,500 lbs.	2 ea.	$171,710.00 Includes Freight	$343420.00
4	**16' Wide Concrete Deck Option.** Same design/features as item one above except that: Deck forms will be shop-installed ready to receive a field-poured reinforced concrete deck by others in lieu of the Douglas Fir Decking. Superstructure without the concrete weighs approximately 77,500 lbs.	2 ea.	$160,455.00 Includes Freight	$330,910.00

P.O. Box 1290
Greeley, Colorado
80632-1290
Phone. 970-356-9600
Toll Free. 800-234-0734
Fax. 970-356-9621
www.bigrbridge.com

5	**Powder Coated Mesh Panels.** For 2" x 2" powder coated mesh panels 6' high shop installed prior to shipping in lieu of horizontal rails and toe plate; add to above numbers.	1 ea.	Lump Sum per bridge	$23,940.00
6	**Abutment Design:**	1 ea	Lump Sum	$8,000.00

Bridge Delivery – Please allow 4 to 6 weeks for shop drawings and 9 to 11 weeks for delivery after receipt of approved drawings.

AASHTO Bridge Specifications require steel fabricators to be certified under the AISC Quality Certification Program. Big R Bridge is certified for Simple and Major Steel Bridges with a Fracture Critical and Sophisticated Paint Endorsement.

The following items are not included with this bid:

- third-party inspection of bridge during fabrication,
- design, excavation and construction of bridge abutments,
- anchor bolt supply and installation,
- unloading and assembly of bridge at the project site,
- supply and placement of reinforced concrete deck (if applicable).

Prices are FOB: Trucks, **Prescott, Arizona.** Delivery will be to a common stockpile accessible by standard highway tractor-trailer, buyer to unload and assemble. Shop drawings will be provided, signed and sealed by a Professional Engineer registered in the state of manufacture. Prices do not include sales tax (if applicable).

Excel is another steel truss bridge supplier contacted about 4 weeks ago, previous to contech-cpi coming to Prescott for the Peavine site visit. All 3 bridge manufacturers can assist in providing the abutment designs to meet the long term requirements of the specific design. The abutment, excavation/material buildup, drainage, etc. are the larger portion of the cost of the bridges.

Thanks.

George Sheats

Hi All,
I like Nigel's solution. I would think it would be acceptable to all involved. I was here when the trains were still running. I also thought Contech had some great bridge designs.

Joyce

Attention: Scott Tkach
Rather than an at-grade crossing I am in favor of an overpass at the same location as the proposed at-grade crossing. While the former might be an adequate (although I disagree) solution for the present, what about the future? If, however, the at-grade crossing is decided upon, could a traffic light be installed at the crossing?

From: Nancy Seaman

I forgot to mention that my solution allows Fann to choose the location of where Road 39 crosses the Peavine, and avoids any extra cost of a bridge or underpass. Nigel

---

Attached are the two maps I provided to the Prescott City Council for their April 7 2009 meeting (paper copies) to show the planned road crossings of the Peavine Trail at Centerpointe East and Road 39. As it turned out, they postponed the relevant agenda item, but these maps were used at the City Council Workshop on June 12.

The two maps show the same area and items; one shows who owns the land while the second shows an aerial view and contours.

Regards, Nigel Reynolds

Yavapai County MIS
1015 Fair St., #326
Prescott, AZ 86305
928 442-5661

NOTE: THE ATTACHMENT INCLUDED IN THE CORRESPONDENCE ABOVE IS SHOWN ON THE FOLLOWING PAGE

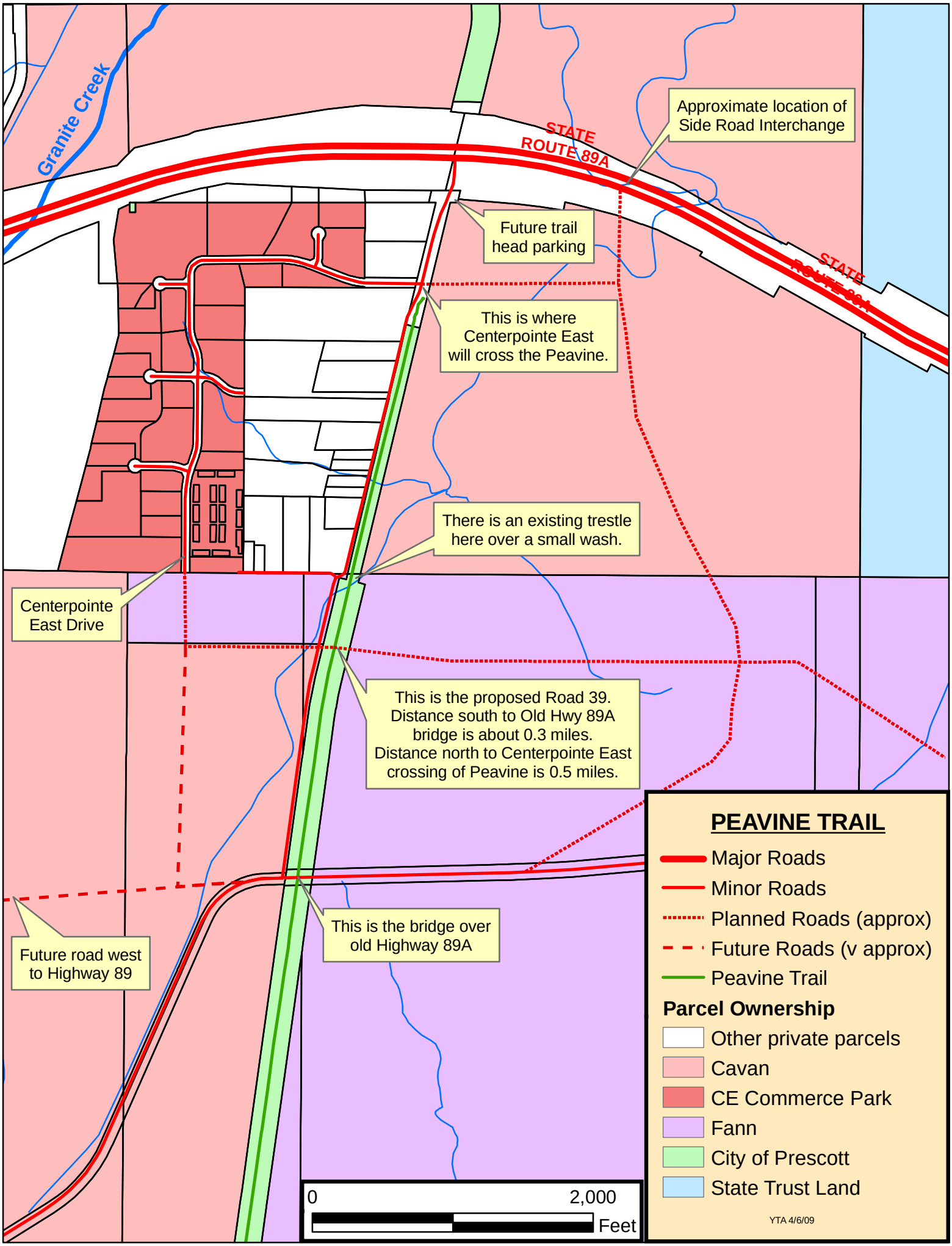
Granite Creek
STATE ROUTE 89A
STATE ROUTE 89A
Approximate location of Side Road Interchange
Future trail head parking
This is where Centerpointe East will cross the Peavine.
There is an existing trestle here over a small wash.
Centerpointe East Drive
This is the proposed Road 39. Distance south to Old Hwy 89A bridge is about 0.3 miles. Distance north to Centerpointe East crossing of Peavine is 0.5 miles.
This is the bridge over old Highway 89A
Future road west to Highway 89
PEAVINE TRAIL
Major Roads
Minor Roads
Planned Roads (approx)
Future Roads (v approx)
Peavine Trail
Parcel Ownership
Other private parcels
Cavan
CE Commerce Park
Fann
City of Prescott
State Trust Land
0
2,000
Feet
YTA 4/6/09

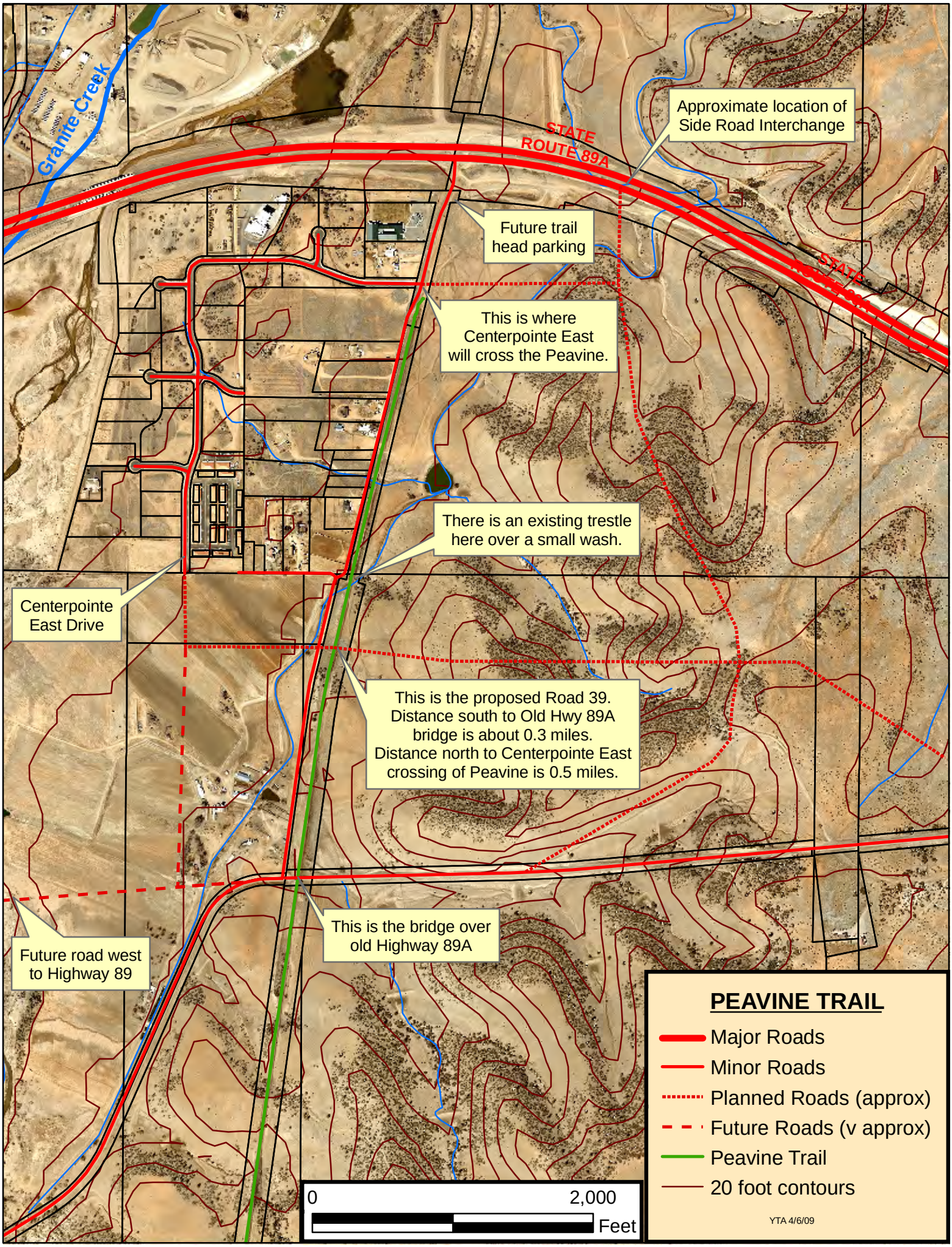
Granite Creek
STATE ROUTE 89A
Approximate location of Side Road Interchange
Future trail head parking
This is where Centerpointe East will cross the Peavine.
There is an existing trestle here over a small wash.
Centerpointe East Drive
This is the proposed Road 39. Distance south to Old Hwy 89A bridge is about 0.3 miles. Distance north to Centerpointe East crossing of Peavine is 0.5 miles.
This is the bridge over old Highway 89A
Future road west to Highway 89
PEAVINE TRAIL
Major Roads
Minor Roads
Planned Roads (approx)
Future Roads (v approx)
Peavine Trail
20 foot contours
0
2,000
Feet
YTA 4/6/09

Scott,

Thanks for your prompt and honest reply. I have some more thoughts but need to see the minutes of the May 26 Council Workshop first. They won't be available for a few days.

On traffic volumes, I'm not sure how precise they are. For example, would there just be one estimate for the full length of Road 39 from Centerpointe East at the west end to the Parkway, or would there be separate estimates for Road 39 between Centerpointe East & the Peavine, and another for Road 39 east of the Peavine? Similarly, would Centerpointe East be broken into traffic segments north of Road 39?

Regards, Nigel

Scott,

Here is another option in place of the culverts (see attached picture – from Park City Utah). Using the abutments and the road bridge (which at 12 feet would be really short) it has these advantages:

1) The portion of the trail under the road would only be the width of the road and be more comforting to users
2) The amount of fill for the road would be less because of not needing cover over the culvert.
3) Lighting may not be required due to shorten length.

Rob Hehlen

Scott,

I think I have a solution to Fann's Road 39.

The attached map (the same one I have used before) shows two routes from the Side Road Interchange to where Road 39 crosses the Peavine. The "south" route goes south on the Parkway and then west on Road 39 to the Peavine. The "west" route goes south on the Parkway for a short distance and then west & south on Centerpointe East Drive before turning east on Road 39 to the Peavine. The distance to the Peavine via either route is essentially the same. The reason given to justify the road 39 crossing of the Peavine is because there must be two access routes into/out of an area, in case one route is blocked due to some emergency.

So, the solution is to define the actual crossing by Road 39 of the Peavine as an emergency access route, and have "crash gates" on both sides of the Peavine on Road 39 so there is no every day traffic across the Peavine using the "south" route. These gates are ONLY used in the event of an emergency that closes the "west" route. I think this should meet the "two access route" requirement – please comment. At some future time, if Centerpointe East is extended south to meet the proposed connector road from Highway 89 at the Phippen Museum to the bridge over old Highway 89A, this Road 39 crossing can be permanently closed.

I think this solution would be acceptable to trail users, and should be acceptable to Fann and the City Council. If Fann doesn't like it, he will need to come up with some strong reasons why he needs both a "south" route and a "west" route on an every day basis.

I'd prefer this solution is not shared with others until you respond with reasons why it might not work, so I have a chance to improve the solution before it is shared with City Council and Fann.

Regards, Nigel

NOTE: THE ATTACHMENT INCLUDED IN THE CORRESPONDENCE ABOVE IS SHOWN ON THE FOLLOWING PAGE

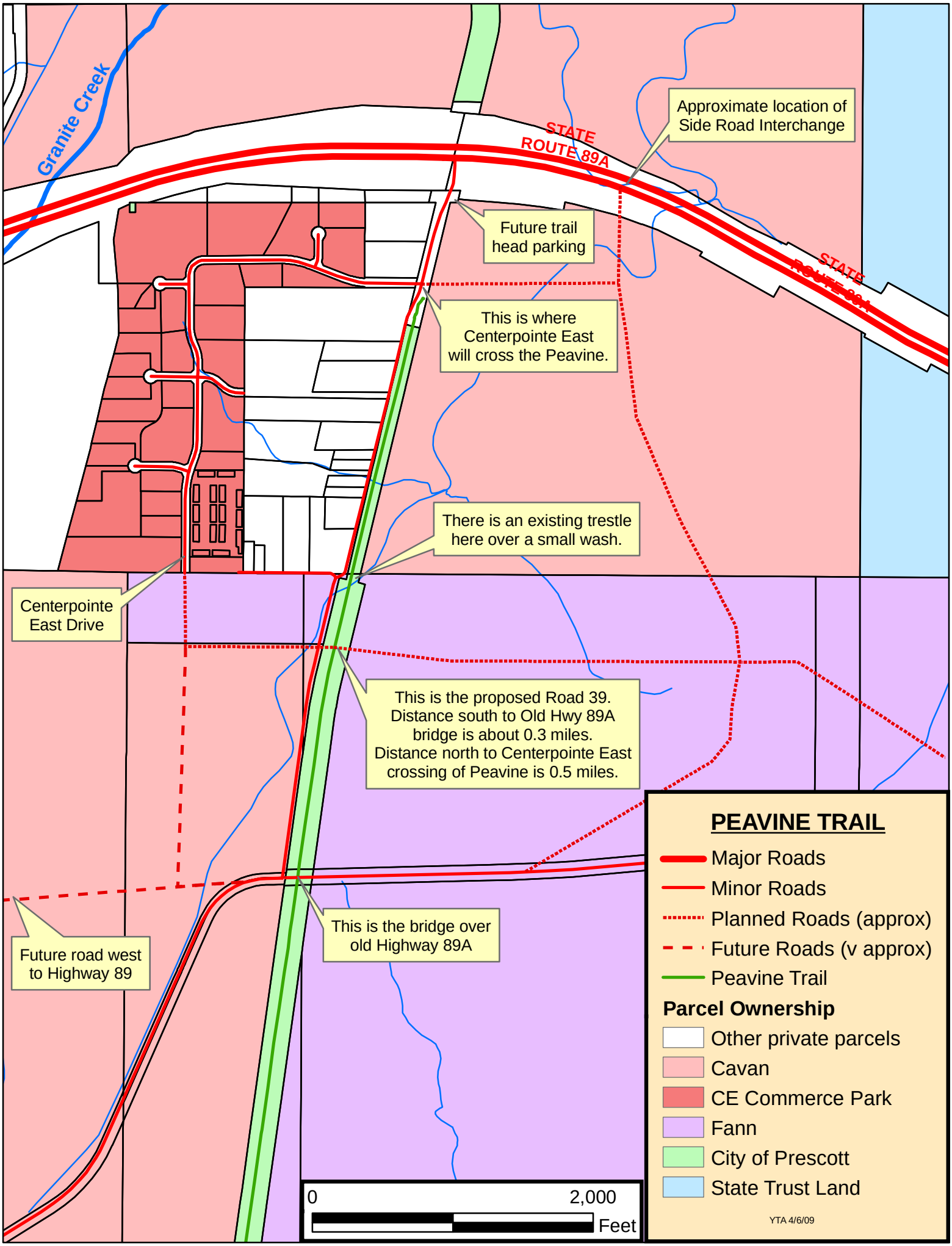
Granite Creek
STATE ROUTE 89A
STATE ROUTE 89A
Approximate location of Side Road Interchange
Future trail head parking
This is where Centerpointe East will cross the Peavine.
There is an existing trestle here over a small wash.
Centerpointe East Drive
This is the proposed Road 39. Distance south to Old Hwy 89A bridge is about 0.3 miles. Distance north to Centerpointe East crossing of Peavine is 0.5 miles.
This is the bridge over old Highway 89A
Future road west to Highway 89
PEAVINE TRAIL
Major Roads
Minor Roads
Planned Roads (approx)
Future Roads (v approx)
Peavine Trail
Parcel Ownership
Other private parcels
Cavan
CE Commerce Park
Fann
City of Prescott
State Trust Land
0
2,000
Feet
YTA 4/6/09

Attention: Scott Tkach
Comments on preferred alternative crossing of the Peavine Trail at Road 39 Pages 7-8 The anticipated use of the Road 39 trail crossing suggests that trail use and vehicular use will not coincide. Road 39 will carry much more than commercial traffic especially on weekends. This road is a major arterial through a huge residential development. Page 14. The separated grade overpass should be the favored option. 1. Unanticipated increases in vehicular traffic on Road 39 will not have an effect on trail traffic. Interactions between vehicles and trail users will not be a concern for decades to come. Thus, increased costs of a bridge overpass can be virtually amortized over decades. An at-grade crossing is quite likely to require many modifications particularly if safety issues become acute over time. Page 15. The bypass roads proposed as part of option #2 are unnecessary and appear to be added only to further inflate the costs of the bridge overpass and further compromise it's acceptance because of the inflated costs. 1. There are plans for an elaborate trailhead only ½-mile to the north having parking stalls, kiosk and trail access. Why do we need to further convenience residents of Granite Dells Estates with convenient access exists within that short distance. 2. This same argument applies to the stated justification of access off of Road 39 to the trail for maintenance vehicles. 3. Since when in the long history of public trails has a 5% grade been considered a major disadvantage to trail users? 4. Why should sight distance across the bridge span be a major disadvantage? Trail traffic even for bicycles is still relatively slow especially when bicycles are forced to slow for even a mild 5% grade. Page 30. Discard the option of a phased approach to a possible bridge overpass. 1. Building a bridge overpass sometime in the future adds costs to that of the original at-grade crossing. 2. The decision matrix used to "confirm" the preferred solution was a very subjective process. Even given that, the bridge alternative scored only 11 percent below the preferred alternative. Given the subjective nature of this process, one can only wonder to what extent the existing business relationship between the contracted engineering firm and the developer of Granite Dells Estates has affected that decision matrix. The preferred alternative is exactly what they wanted and at not cost to them. Is it not time for the City of Prescott to begin favoring the attributes of a nationally recognized public trail rather than simply being facilitators for developers?

From: Ron Smith

Attention: Scott Tkach
Priority must be given to the absolute safety of trail users and the preservation of the existing high quality trail experience. All design decisions must follow one standard above all others: A child that runs ahead on the trail will never be endangered at any Peavine Trail crossing. To ensure this standard is met, here are some design specifics for each proposed type of crossing: AT-GRADE: • Trail grade is not altered at crossing, i.e., no curb ramps for trail users. • Trail users do not stop. • Motor vehicles must come to a complete stop. • Only one motor vehicle lane to cross the trail, holding area on each side to allow vehicle in the other direction to wait. • Motor vehicles must mount a steep ramp to cross the trail after coming to a complete stop. • Design ensures motor vehicles cannot exceed more than 5mph when crossing the trail. OVERPASS: • Trail grade must not exceed 3% in order to preserve the existing high quality trail experience and ensure the trail accommodates the least able-bodied trail users. The ADA 5% maximum is meant only for extreme situations and does not apply here. • At-grade crossing that includes the above design specifics must still be provided to accommodate trail access and any trail user who chooses not to climb the overpass. UNDERPASS: • Trail grade must not exceed 3% in order to preserve the existing high quality trail experience and ensure the trail accommodates the least able-bodied trail users. The ADA 5% maximum is meant only for extreme situations and does not apply here. • A less than 3% grade will also help to prevent dangerous bicycle and wheelchair speeds within the confinement of the underpass. • At-grade crossing that includes the above design specifics must still be provided to accommodate trail access and any trail user who chooses not to descend into

the underpass. • Natural light must be ample and visible through the entire length of the underpass in order to avoid the perception of entering a dangerous place. • Lighting must be provided for times that natural light is not enough. • Drainage treatment must ensure no water or debris accumulates on the trail surface inside the underpass. Again, all design decisions must follow one standard above all others: A child that runs ahead on the trail will never be endangered at any Peavine Trail crossing. If you have any questions, please email or call me at: 928-541-9841. Thank you for this opportunity to comment on this precedent-setting trail crossing design.

From: Sue Knaup

Gents,

Since I'm familiar with separated grade crossings for trails from different cities in AZ (i.e., from personal use, and from being the State Trails Coordinator in the 90's), I can provide examples to see for your benefit if you like. Every design we're discussing are already in use elsewhere, and some are working very well. While they can be more expensive, they remove most risk of injury or fatality, and will give us the piece of mind we may desire to ensure the safety on our National Recreation Trail. I'll be glad to help with any information on examples that you may need.

Thanks for all your efforts.
Eric.

Also consider design factors. An at-grade four or more lane road crossing is one of the most dangerous crossing configurations for bicyclists and pedestrians because the near car might stop and wait thus blocking the sightline of a car driver in the next lane who might not even see the bicyclist or pedestrian. Comparing such a dangerous at-grade crossing to a well-designed at-grade crossing is paramount to this process and could result in a crossing design for some of the Peavine crossings that is superior to any grade-separated option with an enormous cost savings to boot.

I've attached photos of such a well designed at-grade trail crossing in Bremen, Germany. Take note of these particular features that could work well for the Peavine:

*single-lane approach for motor vehicles

*trail is raised, requiring motorized vehicles to climb the hump; also note use of textured paving materials for increased awareness

*street traffic must stop, trail users do not even have to slow down. This equates to safety down to the most vulnerable users including children who like to run or bike ahead.

Sue
Sue Knaup
Executive Director
One Street
+1-928-541-9841
Skype: sueknaup
www.onestreet.org (please add our link to your web site)
P.O. Box 3309

Prescott, Arizona 86302 USA

Community Asset

Attention: Scott Tkach
Consideration of at-grade crossings of the Peavine Trail is completely unacceptable to me and to everyone who uses this trail. It is apparent, that in haste to appease and please developers, the City of Prescott failed to require developers to pay for an overpass where the highway will cross the trail. This is no reason to put the integrity of the trail at risk as well as the safety of those who use it. The Yavapai Trails Association endorses a trail overpass option, where the Peavine will cross the road at a 5% grade to avoid any crossing of the trail by vehicles. I think this is the best option at this point. Unfortunately, traffic noise and pollution will significantly diminish the quality of this trail, but this seems to be inevitable. The city council needs to consider the value of this trail to everyone who uses it. More vehicles passing nearby or, the worst case scenario, ACTUALLY CROSSING THE TRAIL is poor judgement indeed. This trail belongs to you – the citizens of Prescott. It is the City of Prescott's most important and prestigious trail, being listed in many outdoor recreation magazines as a destination unto itself as a grade-separated trail. It is the City's longest and most rewarding trail. The City has recognized its importance by investing close to a million dollars acquiring rights of way, improving the trail and putting in a great trailhead at Sundog Ranch Road. It is a trail with historic significance. It is a National Recreation Trail and is part of the nationwide Rails to Trails. It is a State of Arizona trail. It is a connecting trail. Together with the Iron King from Prescott Valley and the Peavine in Chino Valley, the tri-cities will be joined once the gap north of Highway 89A is completed. This makes it an excellent commuter trail for bicyclists. It is a scenic trail that goes past Watson Lake and through the beautiful Granite Dells. It provides access to exciting new trails through the spectacular rock formations of the Dells. It is nationally known and is already an attraction to tourists who visit Prescott, and spend their money here. This attraction is bound to grow as more and more people look for what is called ecotourism. It is a very popular trail for hikers, mountain bikers, equestrians, families, people with dogs, bird watchers, and runners. It is a well-used trail – on average, over 100 trail users per day, and this traffic is steadily growing. It is a safe trail for families with their children and for equestrians – no vehicular traffic for 5 miles! At the moment, most users access the trail from its southern end, Sundog Ranch Road. In the future, with major existing and new residential communities farther north, this same high level of traffic can be expected from the planned new trailhead next to the Side Road interchange on Highway 89A. Mr. Cavan and associates, one of the major land developers in this area, have generously donated Land for this purpose. New trails, connecting to Fann's planned residential development, will add to this traffic, and increase the value of his lots. If the city (and Fann and Cavan) want high tech companies to move into the commercial developments, the pristine Peavine is a big plus for these future employees – a trail at their back door and the ability to commute to work on their bikes. It is an asset not only to the community but also to the city and to developers – don't ruin it with an at-grade crossing. So, the Peavine is a unique trail. The Peavine is NOT a trail to be messed with. It is a jewel in Prescott's crown!

From: Rita Carey, MS, RD

Rob. This is a frequent argument in the 'financial justification/benefits' arena. I've always taken the approach to 'talk to the perceived opposition' and make their 'Vested Interest' out weigh the 'Conflict of Interest'. The preservation and enhancement of the Peavine can be a big moneymaker for Fann and Cavan, especially since it is already there, as low hanging fruit. They have a real opportunity here to step up and do something special. Besides the increased property values and increased rate of sales, there will be a huge marketing/image opportunity that can become a legacy.

George

-----Original Message-----
From: Rob Hehlen <prescottrob@qwest.net>
To: 'Rob Hehlen' <rob@cragmania.com>
Cc: nigelaz@commbreed.net; susie@cragmania.com; joycemackin@gmail.com; gsheats@aol.com; eric.smith@prescott-az.gov; debbie.horton@prescott-az.gov; chris.hosking@prescott-az.gov; lisa@prescottbikeped.org; info@paulkatan.org
Sent: Mon, Sep 28, 2009 4:11 pm
Subject: Conflict of Interest?
I was browsing through City documents looking for Fann's development agreement to see who would pay for at grade crossings. I haven't found it yet, but I think Fann was to pay for at grade. which if that is the case, if there wasn't an at grade crossing could we expect Fann to 'pitch in' his cost if not used for a grade separated crossing?

Perhaps more important is who the City hired to do the crossing study (I assume the City hired Lyon). I believe there is a conflict of interest here as Lyon was Fann's Engineer for developing his preliminary plat:

PP09-001, Preliminary Plat for Granite Dells Estates Commercial PAD. APN: 103- 04-001L, 103-04-001M, 103-04-001Q, 103-04-002A, 103-04-003B, 103-04-009C and totaling ± 206 acres. Located South of State Route 89A, East of the Peavine Trail. Owner is Granite Dells Estates Properties Inc. Engineering is Lyon Engineering. Community Planner is Steve Gaber (928) 777-1206.

No wonder the matrix, objective as the numbers are, seem skewed in favor of grade separated crossings.

Rob

Ed Fuller, and engineer here in Prescott Lakes went through the Peavine Crossing Alternatives matrix and applied his ratings. With only a few minor changes the Pedestrian Bridge alternative came out on top. He did not change the categories such as adding the fact an at grade crossing does not fit within the City General Plan directives or agreement with the original Grant to acquire the Rails to Trails resource. Since the Peavine became City 'Open Space/Preserve in Perpetuity' many additional parcels of adjacent Open Space have been added in the Granite Dells, which has increased the value of the Peavine 10 fold. With the development plans along the Peavine both south and north of Hwy 89A, the preservation and enhancement of the Peavine will offer a quick return. Railroad themed pedestrian bridges will make this area a magnet for residential and commercial growth.

George Sheats
Prescott Lakes Landscaping, Parks, and Trails
Member, Over the Hill Gang

George,
Attached is my revision to the Peavine matrix. I increased the Aesthetics weight to 10% and decreased the Property Owners impact to 5%. I changed visual impact and Usability/Convenience for Option 1 and 2 to favor Overpass above At Grade. I also reduced the Safety Score for the At Grade option because as a biker or a pedestrian I see a greater safety risk with cross traffic on the trail. The result favors substantially the Overpass (option 2) above the At Grade (option 1) by 81.3 to 69.3.

Ed Fuller

Attention: Scott Tkach
As a frequent user of the Peavine Trail and a new (2 year) resident of Prescott I feel strongly that an at grade crossing would detract from the great asset that this trial is to our community. Like me, many of our new residents will be drawn here by the great out door recreation opportunities of this area. A grade separated crossing will continue to add to our recreation assets that are so important to our quality of life here in Prescott. Best Regards, Jim Gray

From: Jim Gray

Attention: Scott Tkach
I\'m an avid bicycle rider. I ride the Peavine and Iron King on an average of 5/6 days a week. I have reviewed the documents and strongly choose options 2 or 3. Grade level Peavine with an elevated Road 39. I don\'t like the idea of a dark 12 X 12 X 100 ft. tunnel but this is much better than stopping for cross traffic. I hope you, in your long range vision that option 1 is not selected. The Peavine and Iron King trails were part of reason for moving into this area. Please don\'t look at the $$\'s only. Let\'s look long term and keep safety in mind. Thanks for allowing my input. My wife would also like to recommend the same options. Her name is Lawshe\' Ballard address- 4545 Rustler\'s Canyon, Prescott 2 votes for options 2 or 3. Please acknowledge this email. jb

From: JB Ballard

Attention: Scott Tkach
The Peavine Trail must be preserved. From the Lyon Engineering Options, only Option 2 supports users of the trail. I hike and bike this trail and always see many families with small chilren on the trail...let us not ruin the best asset this city has in order to accommodate a developer! We are really sick of ignorance along these lines.

From: Virginia Ingram

Attention: Scott Tkach
I have reviewed the analysis of the Yavapai Trails Association regarding the road crossings for the Peavine Trail and agree that option #2 is best. The Peavine must be preserved and not have an at grade crossing. Leah Gilbert Member, Prescott Outings Club & Prescott Hiking Club

From: Leah B. Gilbert

Attention: Scott Tkach
I would like to state that I fully support a grade-separated crossing for the Peavine Trail at Road 39. This beautiful trail is heavily traveled and is an indispensable asset to the Prescott area. A grade-separated intersection will help preserve the integrity of the trail and allow trail users access without interruption. I feel that this project is well worth the expense! thank you for considering my comments. -Ron Harvey Dean of Students Kestrel High School

From: Ron Harvey

Attention: Scott Tkach
Any at grade crossing of the Peavine Trail should be avoided. The Trail is a community resource which should not be degraded merely to save a developer costs. Public ROW such as the Peavine Trail should never be given away. As a traffic and highway engineer with many years of experience, I suggest you recognize that in twenty years there will be serious conflicts between the pedestrian traffic and vehicular traffic at the proposed crossing. A grade separated crossing paid for by the developer is best for the community. The developer wants to build his improvements which will bring a direct profit to only him. He should be made to pay for all improvements to the Peavine Trail, so it continues to function as a separated trail structure far into the future.

From: Bill Robertson

Attention: Scott Tkach
To Whom it may concern- I have lived in this area and have enjoyed the many benefits that Yavapai county has to offer its citizens for 16 years. One of the benefits is the many hiking and biking trails in our beautiful area. I bike the Peevine/Iron King trail 3 to 4 times a week. I have seen many forms of wildlife on my rides including, bobcats, antelope, deer, snakes and quail. I love that trail so much, my spirit soars when I ride through the pristine countryside. I consider it one of our counties jewels and it would be a damn shame to put a road through it and disrupt this incredible ecosystem. Any roads and traffic will have a direct negative impact on that trail. Please, please, please do not destroy our trail. Kathy Kent- Peevine Trail Lover

From: Kathy Kent

Revised Matrix and Analysis of Report Contents

Mayor and Prescott City Council
RE: Peavine Trail Crossing Design Alternative Analysis for Granite Dells Estates
Proposed Road 39

Yavapai Trails Association would like to thank Scott Tkach , Lyon Engineering and the City of Prescott for the time and effort spent in preparing the Peavine Trail options presented to various trail advocates at the September 24 meeting.
Lyon Engineering presented 5 possible options for the Proposed Road 39 crossing of the Peavine Trail. Yavapai Trails Association supports a Grade Separated Peavine Crossing. We support options 2 and 3, but prefer option 2. However, we have addressed all of the possible options in our analysis and have included an alternative decision matrix. Our analysis document includes an appendix stating our reasons why the Peavine is unique and should be treated as a valuable asset. These documents are attached for Council's review.
Yavapai Trails Association urges the council to form a policy of no at-grade crossings on the Peavine Trail.
Thank You,
Christina Jan, Secretary, on behalf of:
Joyce Mackin, President
Yavapai Trails Association Board and Members

YTA's Analysis

These comments apply to the Peavine/Road 39 Document produced by Lyon Engineering for the City of Prescott.

This YTA analysis document only addresses Options 1 - 4. We don't think Option 5 is feasible due to the flood problems and having the highest cost.

Our main comments on the Decision Matrix are in a separate document.

Before commenting specifically on Options 1 - 4, we think the following principles need to be emphasized.

1. The Peavine Trail was there first – before developers decided to do development.
   a. Give priority to the Peavine. If it's a matter of convenience, put the inconvenience on the road traffic not the Peavine traffic.
   b. This is a road project, not a trail project – the trail existed long before any roads were contemplated. The City has a fund for road projects, approved and paid for by taxpayers – use this fund for any costs associated with Road 39 crossing the Peavine.
   c. YTA recommends that the City be very careful in the future about its contracts with developers. In that the Peavine trail was there first, all crossings with any significant vehicular traffic should be grade separated, and the cost of any overpass or underpass across the Peavine should be born by the developer (the cost of the Centerpointe East crossing is an exception as it is a City responsibility). This observation needs to be included in the Road 39 Document to avoid continual rehashing of this issue.

2. The Peavine Trail is a unique community asset – see Appendix A for reasons why trail users and others consider it to be special.
    a. Since there will soon be new members on the City Council, YTA believes it to be most important that these reasons be included in the Road 39 Document for their benefit.
    b. Preserving the integrity of the Peavine is an investment, and any expenditure for road crossings should be considered as a one-time cost to maintain this irreplaceable asset.

OPTION 1: AT-GRADE CROSSING

1. An at-grade crossing will reduce the integrity of the Peavine trail and the free passage of trail users. At-grade crossings should be avoided on this special trail (see Appendix A for reasons why this trail should be given special treatment).

2. An at-grade crossing raises serious safety issues. The greatest safety concern is young children walking or riding bikes along the Peavine, who may be oblivious to warning signs and the danger of vehicular traffic. It should be noted that Peavine users have traveled about 4 miles from the Sundog trailhead to reach Road 39 without crossing any road (except Storm Ranch Road, which has virtually no traffic, and has a four way stop). No significant roads cross the Peavine at-grade now, and this condition should remain unchanged.

3. The current proposal, which specifies a 35 mph speed limit at the crossing, is unsafe. Many drivers routinely exceed the speed limit, so speeds of 45 mph will not be uncommon. The adjusted weight for Safety in the matrix is almost identical for Options 1 and 2 (24 and 27 respectively). This makes no sense. If the numbers in the matrix are revised to show the additional safety provided by a bridge or culvert, the value of an at-grade crossing decreases significantly.

4. Due to several federal transportation enhancement grants provided to the City for purchase of rails-to-trails right-of-way, at-grade crossings may not be sanctioned under the terms of these grants. Our analysis of provisions in various grants leads us to believe at-grade crossings will not be acceptable. Any delay in the ruling on this issue by the federal authorities could affect preparation work on Road 39. On this basis, Option 1 should be discarded.

OPTION 2: GRADE SEPARATED PEAVINE OVERPASS

1. This option is best for trail users, both for reasons of safety and to avoid disruption of the integrity of travel on the Peavine. Integrity for this trail is defined as having no at-grade crossings, which is what attracts trail users now, and will do so in the future.

2. This option is also best for vehicular traffic on Road 39 as drivers won't have to slow down for trail users, nor contend with rumble strips, medians and other devices.

3. The 5% grade for overpasses or underpasses is acceptable to all types of trail users and has minimal impact. It you have traveled a number of miles to reach this proposed crossing, a slight grade for a short distance due to an overpass or underpass is considered irrelevant to the vast majority of trail users. It is a much better alternative than the disruption to free traffic flow caused by an at-grade crossing. In our opinion, the Road 39 Document should NOT mention a 5% grade as being a negative quality. It should only be included because it is an Americans with Disabilities Act (ADA) requirement. It should also be noted that most trail users enjoy the view an elevated bridge provides.

4. In YTA's opinion, the need for an at-grade bypass crossing next to the overpass bridge is unnecessary. Our reasons are as follows:
    a. Almost all equestrians prefer a properly designed bridge to a road crossing.
    b. The overpass bridge can carry vehicles from the north, such as city maintenance pick-ups and emergency vehicles like police cars and Life Line ambulances.
    c. No trail access from Road 39 is provided in Options 3 - 5.
    d. To require access for heavy fire engine type vehicles at Road 39 is unreasonable, and is not included in Options 3-5. If it is absolutely necessary, a single gated access ramp on the west side of the bridge going south would solve this issue and could also be used for trail access.
    e. This single-direction-access option avoids the dangers resulting from trail users crossing Road 39 here.
    f. Road 39 does not have a sidewalk, so pedestrian traffic is not expected.

5. If the bypass would significantly increase the cost of the Option 2 for various reasons, including encroachment on private land, it should be included as a separate option.

OPTION 3: GRADE SEPARATED PEAVINE UNDERPASS

1. This option is acceptable to trail users as it avoids interaction between vehicles and trail users.

2. Removing the center turn lane where the road goes over the culvert could shorten the length of the culvert, indicated as 87 feet in the Document. This would save cost as well as being better for trail users.

3. Appendix F (Cost Estimate) shows the cost of Option 3. The first two lines show a cost of $86,400 for the Box Culvert and $52,000 for installation, making a total of $138,400. However, Appendix E1 (Underpass Crossing) shows two alternatives, namely a Precast Underpass and a Multi-plate Underpass. The Multi-plate underpass has a lower cost, with a total of $62,444 for the culvert and installation, which is about $76,000 less. Why was the higher figure used? By using the lower cost alternative, Option 3 becomes cost competitive.

OPTION 4: GRADE SEPARATED PEAVINE UNDERPASS, ALTERNATE LOCATION

1. This option is acceptable to trail users as it avoids interaction between vehicles and trail users.

2. Removing the center turn lane where the road goes over the culvert could shorten the length of the culvert, indicated as 98 feet in the Document. Perhaps the bike lanes could be eliminated also (see paragraph 4 below), resulting in an even shorter culvert. This would save cost as well as being better for trail users.

3. To reduce the cost of this option, Road 39 could make a 90-degree bend to the north immediately after crossing the culvert, and then another 90-degree bend to the west onto the original alignment of Road 39. This would minimize encroachment onto Cavan's property on the west side of the Peavine, and maybe eliminate encroachment entirely as the Peavine right-of-way at this point is about 200 feet. This would be less convenient for vehicular traffic, but remember Principle 1a on page 1.

4. Access to the Peavine at Road 39 could be provided on the west side through a narrow opening from the road onto the Peavine. By providing a narrow access ramp on the east side of the Peavine, leading from Road 39 down to the Peavine at the original alignment, bikes could get across the Peavine, thus avoiding the need for bike lanes on top of the culvert.

5. The length of the culvert in Option 4 is 98 feet whereas the length of the culvert in Option 3 is only 87 feet. Regardless, the same comments as given above for Option 3 (paragraph 3) also apply to Option 4.

Appendix A

PEAVINE TRAIL: A SPECIAL TRAIL

The Peavine Trail is not just "any old trail," it is a unique community and regional asset. I suspect that many members of the City Council have not walked the full length of the Peavine, so let me remind you and others why it is so special.

- This trail belongs to you – the citizens of Prescott.
- It is the City of Prescott's most important and prestigious trail, being listed in many outdoor recreation magazines as a destination unto itself as a grade-separated trail.
- It is the City's longest and most rewarding trail.
- The City has recognized its importance by investing close to a million dollars acquiring rights of way, improving the trail and putting in a great trailhead at Sundog Ranch Road.
- It is a trail with historic significance.
- It is a National Recreation Trail and is part of the nationwide Rails to Trails.
- It is a State of Arizona trail.
- It is a connecting trail. Together with the Iron King from Prescott Valley and the Peavine in Chino Valley, the tri-cities will be joined once the gap north of Highway 89A is completed. This makes it an excellent commuter trail for bicyclists.
- It is a scenic trail that goes past Watson Lake and through the beautiful Granite Dells. It provides access to exciting new trails through the spectacular rock formations of the Dells.
- It is nationally known and is already an attraction to tourists who visit Prescott, and spend their money here. This attraction is bound to grow as more and more people look for what is called ecotourism.
- It is a very popular trail for hikers, mountain bikers, equestrians, families, people with dogs, bird watchers, and runners.
- It is a well-used trail – on average, over 100 trail users per day, and this traffic is steadily growing.
- It is a safe trail for families with their children and for equestrians – no vehicular traffic for 5 miles!
- At the moment, most users access the trail from its southern end, Sundog Ranch Road. In the future, with major existing and new residential communities farther north, this same high level of traffic can be expected from the planned new trailhead next to the Side Road interchange on Highway 89A. Mr. Cavan and associates, one of the major land developers in this area, have generously donated Land for this purpose.
- New trails, connecting to Fann's planned residential development, will add to this traffic, and increase the value of his lots.
- If the city (and Fann and Cavan) want high tech companies to move into the commercial developments, the pristine Peavine is a big plus for these future employees – a trail at their back door and the ability to commute to work on their bikes.
- It is an asset not only to the community but also to the city and to developers – don't ruin it with an at-grade crossing.
- So, the Peavine is a unique trail.
- The Peavine is NOT a trail to be messed with. It is a jewel in Prescott's crown!

Peavine Trail Road 39 Crossing Weighted Decision Matrix

	Category Total Weight	Item Weight	At-Grade		Overpass		Underpass At-Grade		Score Range	Comments
			Option 1		Option 2		Option 3			
Safety	30		Score[1] (1-10)	Adjusted Weight[2]	Score[1] (1-10)	Adjusted Weight[2]	Score[1] (1-10)	Adjusted Weight[2]		
Trail Users-Peavine		30	3	9	9	27	9	27	1=Least Safe 10=Most Safe	Using a bridge above an intersection with vehicles is far safer Vehicle safety is also increased without pedestrian traffic
Aesthetics	5									
Visual Impact		5	3	1.5	8	4	5	2.5	1=Least Aesthetic 10=Most Aesthetic	Overpass bridge retains historic character of the SF,P&P, Railway Overpass bridge sends pedestrians welcome message to users
Usability and Convenience	30									
Pedestrian		10	3	3	8	8	9	9	1=Less Usable 10=Most Usable (Current Condition)	Pedestrians don't need to do anything but enjoy scenery
Equestrian		7	4	2.8	7	4.9	5	3.5		Equestrians do not have to deal with vehicles if trained for bridges
Bicycle		10	3	3	9	9	9	9		Bikes can enjoy a short increase n grade for a safe crossing
Maintenance Vehicle		3	6	1.8	6	1.8	6	1.8		Maintenance vehicles pay extra attention either way
Cost	25									
Structure/Foundation		7	9	6.3	5	3.5	5	3.5	1=High Cost 10=Low Cost	Either alternative will be engineering constrcuted/certified
Earthwork		4	8	3.2	4	1.6	2	0.8		
Maintenance		4	7	2.8	6	2.4	6	2.4		Bridges mostly maintenance free. At grade high-tech monitoring
Energy Usage		2	8	1.6	7	1.4	7	1.4		More visibility when vehicles mix with various pedestrian types
ROW Impact		8	10	8	10	8	2	1.6		Unknown
Adjacent Property Owner Impact	10									
Encroachment onto Property		5	3	1.5	8	4	3	1.5	1=High Impact 10=Low Impact	Dangerous encroachment on Rails-to-Trails user experience
Usability/Access to Land		5	10	5	9	4.5	7	3.5		Land owner has access to Granite Dells via Peavine
Total	**100**			**49.5**		**80.1**		**67.5**		

(1) - Option's "score" is based on a 1-10 range
(2) - Option's "adjusted weight" is calculated by multiplying the "item weight" by the "score" divided by 10
(*) - Option 5 scores in this area are lower than Option 3 and 4 due to the possibility of standing water and muddy conditions following a rain or snow event

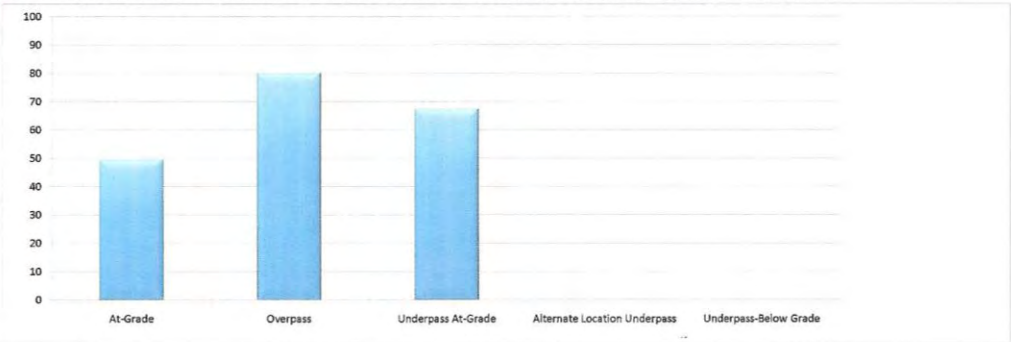

Lyon Engineering

Mayor and Prescott City Council

RE: Peavine Trail Crossing Design Alternative Analysis for Granite Dells Estates

Prescott Lakes community views the Peavine Trail as a valuable asset to our community with frequent use of the Peavine by our residents including retirees and their grandchildren. We also view the Peavine Trail as a key part of the overall Prescott Lakes trails system and Community amenities. This asset attracts potential homeowners to Prescott Lakes, with the Peavine's unique flat and protected terrain.

Prescott Lakes Trails System would like to thank Scott Tkach, Lyon Engineering and the City of Prescott for the time and effort spent in preparing the Peavine Trail options presented to various trail advocates at the September 24 meeting.

Lyon Engineering presented 5 possible options for the Proposed Road 39 crossing of the Peavine Trail including a decision analysis matrix. Presscott Lakes supports a Grade Separated Peavine Crossing in contrast to that supported by the presented matrix. Attached is our proposed modified matrix which favors option 2, the Grade Separated Overpass.We place a much lower rating on User Safety, Aesthetics, and Useability and Convenience for the At-Grade crossing than the proposed analysis matrix presented. We also provided a higher Category Weight for Aesthetics and lower Category Weight for Adjacent Property Owner Impact. We have not contested the Cost Evaluation nor the Cost Category Total Weight. Our matrix however demonstrates that the other less tangible factors out-weigh the cost differential in favor of a separated grade crossing.

Presscott Lakes Trail System urges the council to form a policy of no at grade-crossings on the Peavine Trail.

Sincerely

Ed Fuller, representing the Presscott Lakes Trails System

NOTE: THE ATTACHMENT INCLUDED IN THE CORRESPONDENCE ABOVE IS SHOWN ON THE FOLLOWING PAGE

Peavine Trail Road 39 Crossing Weighted Decision Matrix

	Category Total Weight	Item Weight	At-Grade		Overpass		Underpass At-Grade		Alternate Location Underpass		Underpass-Below Grade		Score Range
			Option 1		Option 2		Option 3		Option 4		Option 5		
Safety	30		Score[1] (1-10)	Adjusted Weight[2]	Score[1] (1-10)	Adjusted Weight[2]	Score[1] (1-10)	Adjusted Weight[2]	Score[1] (1-10)	Adjusted Weight[2]	Score[1] (1-10)	Adjusted Weight[2]	1=Least Safe 10=Most Safe
Trail Users-Peavine		30	6	18	9	27	9	27	9	27	4	12	
Aesthetics	10												
Visual Impact		10	5	5	7	7	5	5	5	5	7	7	1=Least Aesthetic 10=Most Aesthetic
Usability and Convenience	30												
Pedestrian		10	5	5	9	9	9	9	9	9	2 *	2	1=Less Usable 10=Most Usable (Current Condition)
Equestrian		7	5	3.5	9	6.3	5	3.5	5	3.5	4 *	2.8	
Bicycle		10	5	5	9	9	9	9	9	9	2 *	2	
Maintenance Vehicle		3	10	3	8	2.4	8	2.4	8	2.4	2 *	0.6	
Cost	25												
Structure/Foundation		7	10	7	2	1.4	2	1.4	2	1.4	2	1.4	1=High Cost 10=Low Cost
Earthwork		4	10	4	3	1.2	2	0.8	3	1.2	4	1.6	
Maintenance		4	10	4	8	3.2	6	2.4	6	2.4	1	0.4	
Energy Usage		2	9	1.8	9	1.8	7	1.4	7	1.4	4	0.8	
ROW Impact		8	10	8	10	8	2	1.6	1	0.8	10	8	
Adjacent Property Owner Impact	5												
Encroachment onto Property		2.5	10	2.5	10	2.5	3	0.75	1	0.25	10	2.5	1=High Impact 10=Low Impact
Usability/Access to Land		2.5	10	2.5	10	2.5	4	1	1	0.25	10	2.5	
Total	**100**			**69.3**		**81.3**		**65.25**		**63.6**		**43.6**	

(1) - Option's "score" is based on a 1-10 range
(2) - Option's "adjusted weight" is calculated by multiplying the "item weight" by the "score" divided by 10
(*) - Option 5 scores in this area are lower than Option 3 and 4 due to the possibility of standing water and muddy conditions following a rain or snow event

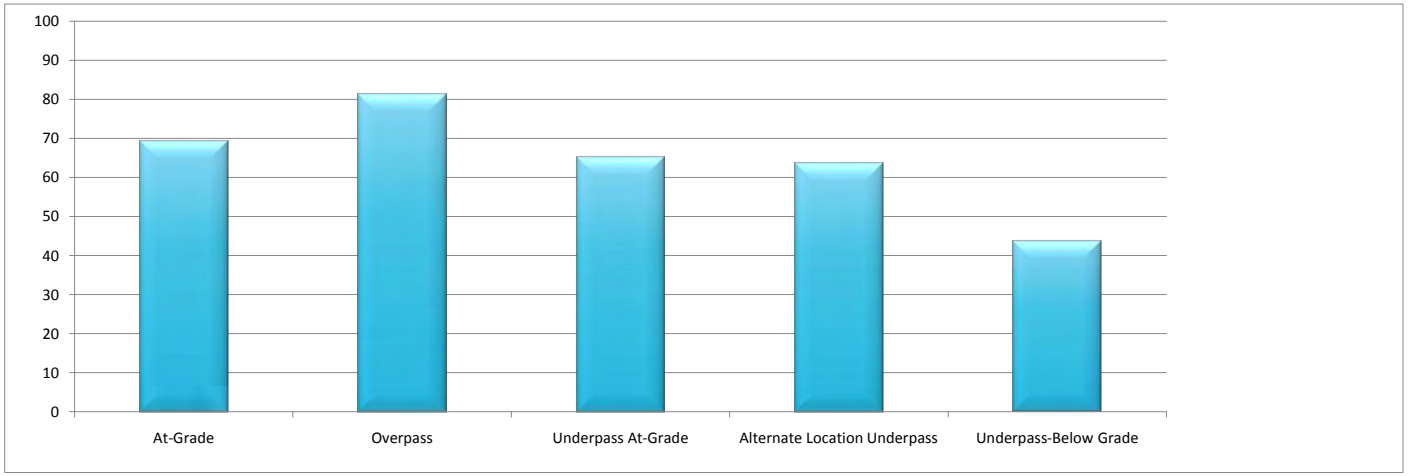

Peavine Trail Crossing Road 39 Comments

Rob Hehlen

Trails Specialist – Prescott National Forest

First off I would like to thank the City of Prescott for putting this report together. It shows commitment to the residents of this area and their concern for this trail. The design work on the 5 options and cost estimates are extremely helpful and the matrix is an excellent way to summarize the findings. However, I believe the way the costs for many of the options were put together had flaws and using subjective ratings in the matrix doesn't result in properly rating the options. Here are my suggestions.

1. Option Costs

   Option 2 – This is actually a combination of a bridge option and option 1 which adds additional cost that isn't required to build the bridge. If this option was asked for by the COP, then I suggest adding an Option 2a that would remove all costs associated with the at grade portion of this estimate. Items that could be removed for and Option 2a:

Street Lights	$24,000
Vertical Curb and Gutter – Rd 39 Island	1,836
Island Landscaping	500
Sidewalk Ramps with Detectible Warnings	4,000
12' wide bypass Road	20,200
Bollards/Access Gate	500
Striping	1,000
Subtotal Savings	52,036
20% Contingency	10,407
Savings	62,443
Cost of Option 2a (353,215-62,443)	**290,077**

   Option 3-5 – In Appendix E Contech Bridge Solutions gave estimates for two different types of underpasses. The costs used for options 3-5 used the most expensive of the two options. $166,080 vs $74,932 (this adds the 20% contingency to the cost estimates from Contech). Using the lower price, the cost of the underpass options would be reduced by $91,147.

2. Matrix Items

   Property Owner Impact: I think this should be thrown out. The cost estimates compensate the owners for encroachment onto their property, so it wouldn't be 'their' land anymore. Take the 10 points and add it to "Usability and Convenience – Rd 39 Vehicles" (see next paragraph)

   One item should be added to the matrix is Usability and Convenience – Rd 39 Vehicles. The reason for this is that Option 1 where vehicles as large as a semi-truck would have to slow down from 35 plus MPH to go over the raised trail crossing (usually to 20 MPH or slower). This would be a major inconvenience to motor vehicle traffic and should be addressed.

3. Matrix Weighting

   This is somewhat subjective, but overall I think the weighting of the major categories is good. However, the weighting breakdown for "Usability and Convenience" and "Cost" need to be changed based on actual figures. Here's my recommendations.

Usability and Convenience: Base the Item Weight on percentage of use. On a weekly basis there are 1,413 users. Bikes and hikers are split about 50/50. Maintenance vehicles go on the trail about twice a week and there are perhaps two horses per week. Using percentage of use, the items weights should be adjusted as such:
Pedestrian: 14.95
Equestrian: 0.05
Bicycle: 14.95
Maintenance Vehicle: 0.05
Even though it would skew the numbers towards horses and maintenance vehicles, I'd suggest 14, 1, 14, 1, respectively.

Cost: Splitting the costs into the 5 different items isn't necessary. What matters are only two costs. Cost of construction and cost of maintenance/energy use. I'd split the category weight 20 for construction and 5 for maintenance.

4. Matrix Score

Where possible, actual facts should be used to come up with the matrix scores. All items should be rated 1-10 with the least desirable being a 1 and most desirable being a 10.

Safety: This will probably be subjective as data on trail bridge crossings and underpasses are probably non existent. I would say, however, that is will be much safer not to cross with vehicles than to cross with vehicles. If the 5 options are rated on a scale of 1-10 with the least safe option being a 1 and the most save being a 10, I would rate Option 1 a 1, Options 2-4 a 10 and Option 5 a 7. Again, subjective.

Aesthetics and Usability. To be accurate, a survey should be made of trail users to get actual figures to create the scores. I think you will find that Option 1 is over rated.

Cost: Actual figures from the cost estimates should be used to come up with the score, not subjective numbers that are currently used now. Taking the most expensive option (after adjusting for the lower underpass cost) as a 1 and the lowest cost option as a 10, then dividing the difference between the two into 9 equal parts (506,664-46,225/9 = 51,160) , the item score can be calculated. Example: Option 2 (353,215/51,160=6.9) Since the scale is reversed (10 being lowest cost) subtract 6.9 from 10 and the score for Option 2 is 3.1. Score for Option 2a is 4.3. Same holds true for maintenance/energy costs. Should be based on a 10-20 year average to come up with the figures.

NOTE: THE ATTACHMENT INCLUDED IN THE CORRESPONDENCE ABOVE IS SHOWN ON THE FOLLOWING PAGE

Peavine Trail Road 39 Crossing Weighted Decision Matrix

	Category Total Weight	Item Weight	At-Grade		Overpass With At-Grade Option		Overpass Without At-Grade Option		Underpass At-Grade		Alternate Location Underpass		Underpass-Below Grade		Score Range
			Option 1		Option 2		Option 2a		Option 3		Option 4		Option 5		
Safety	30		Score[1] (1-10)	Adjusted Weight[2]	Score[1] (1-10)	Adjusted Weight[2]	Score[1] (1-10)	Adjusted Weight[2]	Score[1] (1-10)	Adjusted Weight[2]	Score[1] (1-10)	Adjusted Weight[2]	Score[1] (1-10)	Adjusted Weight[2]	1=Least Safe 10=Most Safe
Trail Users-Peavine		30	1	3	6	18	9	27	10	30	10	30	7	21	
Aesthetics	5														
Visual Impact		5	7	3.5	10	5	10	5	6	3	6	3	7	3.5	1=Least Aesthetic 10=Most Aesthetic
Usability and Convenience Trail Users	30														
Pedestrian		14	1	1.4	8	11.2	7	9.8	10	14	10	14	7	9.8	1=Less Usable 10=Most Usable (Current Condition)
Equestrian		1	1	0.1	10	1	8	0.8	7	0.7	7	0.7	6	0.6	
Bicycle		14	1	1.4	8	11.2	7	9.8	10	14	10	14	7	9.8	
Maintenance Vehicle		1	10	1	10	1	6	0.6	8	0.8	8	0.8	7	0.7	
Usability and Convenience Road 39 Vehicles	10														
Road 39 Vehicles		10	1	1	10	10	10	10	10	10	10	10	10	10	1=High Impact
Cost	25		$46,225		$353,215		$290,077		$292,759		$331,330		$506,664		
Construction/ROW		20	10	20	3.1	6.2	4.3	8.6	4.3	8.6	3.5	7	1	2	1=High Cost
Maintenance/Energy Use		5	6	3	6	3	10	5	7	3.5	7	3.5	1	0.5	
Total	**100**			**34.4**		**66.6**		**76.6**		**84.6**		**83**		**57.9**	

(1) - Option's "score" is based on a 1-10 range
(2) - Option's "adjusted weight" is calculated by multiplying the "item weight" by the "score" divided by 10

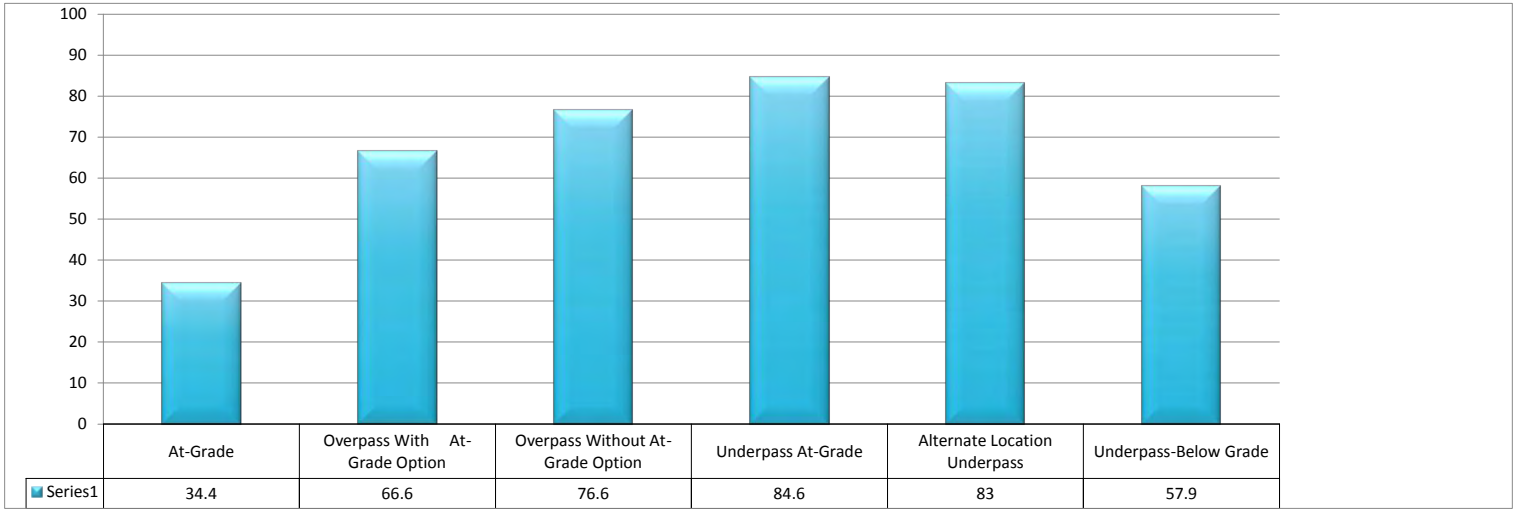

Miscellaneous Comments and Correspondence

Attention: Scott Tkach
There shall be no at grade crossing allowed across the peavine trail. The developer shall pay for the grade separation, an overpass or tunnel, not the taxpayer of the city of prescott.

From: alfred hoeger

Hi Scott,

Just wanted to make sure you received our comments on Rd 39 Options. I dropped them off at Engineering yesterday. Please let me know if you received them.

Thanks,
Joyce

Scott,

I'm sorry I didn't see you e-mail below until today -- I normally only work at the County GIS dept. on Monday mornings, Tuesdays and Wednesdays. I am replying from my home e-mail, as Road 39 is my personal activity and doesn't involve YC GIS.

I think you are probably referring to the e-mail that George forwarded to a large audience on Sept 28, with Ed Fuller's comments on the Decision Matrix. That resulted in various responses from Rob Hehlen, Sue Knaup and maybe others. At the YTA meeting last Thursday, we agreed to gather all the comments from the YTA Board, keeping our correspondence internal to the Board. Once we have reviewed all of our internal comments, we will send them to you in a simple format. I hope that will be completed in the next couple of weeks.

I have no control over comments from people other than the YTA Board.

Regard, Nigel
~~~~~~~~~~~~~~~~~~~~~~~~~~~~~~~~~~~~~~

From: Tkach,Scott [mailto:scott.tkach@prescott-az.gov]
Sent: Thursday, October 01, 2009 4:27 PM
To: Nigel Reynolds (GIS)
Cc: Tkach,Scott
Subject: RE: Road 39

Nigel per our conversation after the presentation can you please work with your group try to get a consensus regarding the revised matrix. In order to have a meaningful dialog during the comment resolution it would be tremendously helpful if the Trail Advocates were all on the same page. I have received several versions of the revised matrix and would prefer you folks to provide a unified front regarding your direction rather than having me interoperate the groups collective ranking.

Thanks and have a good weekend.

Regards, -Tkach

Attention: Scott Tkach
I guess my vote would be any option EXCEPT option 1. I Prefer an overpass to an underpass.

From: Roy Willey
~~~~~~~~~~~~~~~~~~~~~~~~~~~~~~~~~~~~~~

The Peavine is a huge tourist destination. Does the city want a headline reading, MN parents and children hit while trying to cross highway!

The Peavine is popular with individuals and local families (including young kids) on bikes, runners, walkers, hikers, moms and dads with kids in strollers. Is the city willing to deal with multiple lawsuits because of grade level street crossings & the resulting pedestrian accidents as the Peavine is extended?

Based on the uproar created by giving a contractor the ability to let a contract on a city street in the Peavine area and the legal battle created by the city's management (or mis-management) of the current election, why is Prescott opening itself up to lawsuits that are avoidable by creating underpasses or overpasses for Peavine users.

How about common sense-save the taxpayers money-avoid lawsuits!

Sharon Arnold
1891 Timber Point East
Prescott, AZ 86303

778-3958

rails-to-trails
conservancy

Western Regional Office
26 O'Farrell Street, Suite 400
San Francisco, CA 94108

tel 415.397.2220
fax 415.397.2228

www.railstotrails.org

11 February 2009

Prescott City Council
City Council Office
201 S. Cortez Street
Prescott, AZ, 86302

Re: Peavine Trail

Dear Members of the Prescott City Council:

We are writing to encourage you to preserve the continuity of the Prescott Peavine Rail-Trail.

Rails-to-Trails Conservancy is a national non-profit organization dedicated to enriching America's communities by creating a nationwide network of trails from former rail lines and connecting corridors to build healthier places for healthier people. In the past 23 years, we have worked with communities to create nearly 15,000 miles of rail-trails across the nation.

The Prescott Peavine Rail-Trail is one of the gems in the national rail-trail network. This trail has been nationally recognized as one of the country's outstanding rail-trails. It was featured as a Destination Trail in our national magazine Rails to Trails in winter 2007; it has been designated a National Recreation Trail, part of a system of trails envisioned in 1988 by the President's Commission on American Outdoors; and the connecting Iron King Trail was featured as the Trail of the Month in our national magazine in January 2005. In addition, we highlighted the Prescott-Peavine Trail in a press release last year as an affordable vacation destination, in light of the high gas prices (see attached).

This scenic trail network is not only a recreational asset for local families, but a route for commuters, and a tourist destination that benefits the local economy. Preserving the continuity of the Peavine and Iron King trail network, without at-grade crossings, is important for a number of reasons, including safety, convenience and popularity as a tourist destination. As a national trails organization working with communities across the country on trail planning and design, we know that an uninterrupted trail experience is a critical factor in attracting local families and commuters, as well as tourists who come to experience the trail and the landscape.

Therefore, we strongly urge you to include underpasses or overpasses to accommodate the trail where new roads or highways will cross the route. Rails-to-Trails Conservancy has documented

many different designs of trail underpasses and bridges that we would be happy to share with you, and can provide other planning resources as you continue to develop your outstanding rail-trail network.

Thank you for your consideration.

Sincerely,

Laura Cohen

Laura R. Cohen
Director, Western Region
Rails-to-Trails Conservancy

cc: President, Joyce Mackin and Board Members, Yavapai Trails Association

---

Rails-to-Trails Conservancy Press Release: 05/12/2008

GOT THE GAS PRICE BLUES? TRY RAIL-TRAILS FOR AN ALTERNATIVE VACATION

Families Across America Turn to Rail-Trails for Cheap, Healthy Fun

WASHINGTON, D.C.—As gas prices lean toward $4 a gallon this summer, Rails-to-Trails Conservancy encourages families to turn to rail-trails as an alternative way to vacation. Rail-trails, pathways converted from old railroad lines, span America, connecting the nation in the same way that that railroads once did. With more than 15,000 miles of rail-trail in America connecting rural landscapes, suburban communities and major metropolitan areas, families can explore the nation without ever having to hop in a car.

"With gas prices at an unprecedented high, vacationers need alternative ways to travel, and rail-trails are a fun, healthy and affordable way to see different parts of the country," says Keith Laughlin, president of Rails-to-Trails Conservancy.

Travelers looking for an urban vacation can turn to rail-trails that showcase cities from unique vantage points, like the Minuteman Bikeway in Boston, the Monon Trail in Indianapolis, or the Burke-Gilman Trail in Seattle. The Monon Trail, for example, begins at in the heart of Indianapolis and ends in the small and eclectic town of Carmel. Along the 15-mile trail tourists can visit cafes, the State Fairgrounds and community staples such as Bubs Burgers and Ice Cream shop—and all without ever needing a car.

More rural trails, such as the Prescott-Peavine Trail in Arizona, provide families with a more outdoors-focused vacation. Rural rail-trails offer plenty of activities to do along the trail, from canoeing to picnicking and fishing, and can tailor accommodations from tent-camping to bed-and-breakfasts to suit their needs or interests.

Rail-trails are also ideal for the family looking for an affordable but fun and easy get-away. Tucked into many suburban towns around the country, trails like the Washington & Old Dominion Rail-Trail Regional Park in Virginia allow vacationers to hit the trail with minimal effort. Families can explore their own backyard and create vacation memories without the standard vacation hassles.

To start planning your vacation around a rail-trail, visit Rails-to-Trails Conservancy's TrailLink.com. Users can search by state, zip code or county to discover rail-trails in their area. Trail profiles feature descriptions, photos and user reviews. Register for free and access detailed trail maps when available. Nearly half of the more than 1,500 rail-trails have been mapped and more are being added every day.