CITY OF PRESCOTT

LAND SPLIT/REPLAT SUBMITTAL CHECKLIST

IN ORDER TO SUBMIT THIS APPLICATION YOU MUST SCHEDULE A MEETING WITH A CITY PLANNER. TO SCHEDULE A MEETING PLEASE CALL 928-777-1207.

RE#: _____ Subdivision Name:_____
LS#: _____ Subdivision Unit: _____ Subdivision Phase:_____
Assessor's Parcel Number(s): _____

No application will be accepted unless it is complete including, but not limited to, the following:

- ❑ A copy of the Pre-Application Conference Letter. PAC#_____
- ❑ Application stating the request and the proposed development, the Assessor's Parcel number, application signed and dated, indicating whether the applicant is the owner or the agent. If agent, include the name and address of the property owner, phone number, and a letter of authorization. (Refer to Page 2)
- ❑ A completed and notarized "Certification for Land Split" form (Refer to page 3)
- ❑ Nine (9) **FOLDED** copies of the Land Split and/or Replat "Map of Survey". (Minimum size 24" X 36") including all information specified in the *Land Development Code*, Article 9.10.5. (Refer to "***Submittal Requirements"*** page 4)
  - ❑ One (1) 8 ½" X 11" xerographic reduction or photo reduction of the Land Split/Replat.
  - ❑ **An electronic file of the Land Split and/or Replat in a .pdf format**.
- ❑ One (1) copy of the legal description of the property with surveyor's seal and an electronic copy of the legal description in "**Word" format**.
- ❑ Current title report, when requested by the staff planner (done within the last 30 days)
- ❑ Completed Water Service Agreement (if increasing density) (Refer to Pages 5-8)

- ❑ A filing fee in the amount of: **$169.00 (Land Split)**
  $353.00 (Replat)

NOTE: A DETERMINATION OF "APPLICATION COMPLETENESS" BY THE STAFF PLANNER AND A RECEIPT FOR THE FILING FEE WILL BE SENT TO THE APPLICANT WITHIN FIFTEEN (15) DAYS OF SUBMITTAL OF THE APPLICATION. PLEASE ALLOW A MINIMUM OF THIRTY (30) WORKING DAYS FOR REVIEW AND APPROVAL/DENIAL OF THE PROJECT.

(Office Use Only)

_____ _____
PLANNER TAKING IN APPLICATION **DATE TAKEN IN**

CITY OF PRESCOTT
COMMUNITY DEVELOPMENT DEPARTMENT
PLANNING DIVISION
201 S. Cortez, Prescott, AZ 86301 (928) 777-1356

LAND SPLIT/REPLAT APPLICATION

LS#_____

RE#_____

Subdivision Plat Name: _____

Current Assessor's Parcel Number (s)(APN):_____

Township_____ **Section**_____ **Range**_____ **Zoning:**_____

	For Staff Use Only
Owner Name & Address: _____ _____ _____ **Phone:**_____ **Fax:**_____ **Email:**_____	Date Received:_____ Taken In By:_____ Assigned To:_____ Date Application Complete:_____
Applicant/Agent Name & Address (If different than property owner, **Agent letter must accompany submittal):** _____ _____ _____ **Phone:**_____ **Fax:**_____ **Email:**_____	Fees & Charges: _____ Receipt #/Date:_____ P&Z Study:_____ P&Z Vote:_____ Council Study_____ Council Vote:_____

Location of Property(Address):_____

Description of request: _____

_____

Total Acres:_____ Total Lots:_____

Min. Lot Size:_____ Max. Lot Size:_____ Average Lot Size: _____

Existing Zoning:_____

Is project in a Reimbursement District:_____ If yes, what type:_____

_____	_____	_____
Name	**Signature**	**Date**

CITY OF PRESCOTT
COMMUNITY DEVELOPMENT DEPARTMENT
PLANNING DIVISION
201 S. Cortez, Prescott, AZ 86301 (928) 777-1356

CERTIFICATION FOR LAND SPLIT

I/we the undersigned hereby certify as owner/agent that the property located at

_____
Address

_____ _____ _____
City State Zip

is not encumbered or obligated by recorded agreement, condition, covenant or restriction that would prohibit the intended lot split; and that I/we understand that approval of the Planning and Zoning Division is subject to all other easements, encumbrances, etc. or restrictions which may apply to said property by virtue of any City ordinances and/or state law and deed restrictions. The City takes no responsibility for said restrictions or requirements and that the burden to comply with such restrictions lies solely with the property owner and/or applicant.

Singed this _____day of _____, 20_____.

_____ _____
Owner Name (Print) Owner Signature

_____ _____
Agent Name (Print) Agent Signature

Subscribed and sworn/affirmed before me this _____day of _____, 20_____.

Notary:_____

(Seal)

My Commission Expires:_____

LAND SPLIT/REPLAT SUBMITTAL REQUIREMENTS
***Land Development Code*, Article 9.10.5/Article 7.9 (*LDC*)**

LAND SPLITS

A land split as defined in the Land Development Code means the division of improved or unimproved land whose area includes 2.5 acres or less into 2 or 3 tracts or parcels of land for the purpose of sale or lease, which would not otherwise be deemed a subdivision such as where new streets or accesses are proposed. Cumulative creation of 4 or more parcels created by land split shall be subject to the procedures of Sec. 9.10.9, Subdivision Plat Review.

All Land Splits shall be processed in accordance with Section 9.10.7 of the *Land Development Code* (LDC), as well as those listed in Section 7.9, where applicable.

ADMINISTRATIVE REPLATS

The following activities shall be considered a "replat" and require an application in accordance and processing with the Final Plat procedures of Section 9.10.9B, but may be administratively approved by the Community Development Director. Notwithstanding the above, the Community Development Director may request and the City Council may direct that any replat request be acted on by Council.

- The joining or merger of lots in a recorded subdivision;
- Any joining of lots and subsequent division of those lots in a recorded subdivision which result in no increase in the total number of lots in that subdivision;
- Any changes in lot lines, which result in only nominal increases or decreases of lot sizes; or
- Any nominal changes in the location of streets, easements, and other public right-of-way.

REVIEW PROCEDURES

Prior to the submission of an application, applicants shall meet with the Community Development Department and Engineering Services Department Staff in a pre-application conference (PAC) unless waived by the Community Development Director. The purpose of the conference is to respond to any questions that the applicant may have regarding the application. At the pre-application conference, a land planner, engineer or surveyor may represent the applicant.

The applicant shall file all information listed on page 1 of the application including, the Map of Survey, prepared by a registered land surveyor, containing a certificate as to accuracy, and his seal displaying the following:

- Vicinity Map
- Property lines and dimensions, street names and outline of parcels to be split
- New yard setback dimensions from all existing buildings to the new property lines
- Any docket, book and page numbers from past dedications or lot splits
- Current lot area and proposed lot areas in square feet
- Zoning of site
- Signature approval Title Blocks for the Community Development Director and Public Works Director

The Community Development Director shall in consultation with Engineering Services review Land Splits and/or Replats and either approve, approve with conditions, deny the application or refer it to City Council for action.

After the Land Split and/or Replat has been approved by the Community Development Director you will be contacted to submit two (2) mylar reproducible copies of the "Map of Survey" along with a Recording fee of $28.00 for the first page and $20.00 for each additional page. Please do not submit mylar copies and recording fees for the Land Split and/or Replat until you are requested to do so from the staff planner.

CITY OF PRESCOTT
PUBLIC WORKS DEPARTMENT
BENJAMIN BURNS, SR. ENG TECHNICIAN
433 N VIRGINIA ST, PRESCOTT, AZ 86302
(928) 777-1130 (F) 928-771-5929

WATER SERVICE AGREEMENT APPLICATION

PERMIT #: WSA_____

Please complete the form and submit a legible legal description on a separate sheet of paper as well as a site plan of the subject property with proposed improvements. Submit all documents and the filing fee directly to the Community Development Department at 201 S. Cortez St, Prescott, AZ 86302.

APPLICANT NAME:_____

ADDRESS:_____

CITY:_____ **STATE:**_____ **ZIP:**_____

PHONE:_____ **CELL:**_____

LEGAL OWNER NAME:_____

ADDRESS:_____

CITY:_____ **STATE:**_____ **ZIP:**_____

PHONE:_____ **CELL:**_____

PROJECT SITE ADDRESS:_____

CURRENT ZONING:_____ **PROPOSED ZONING:**_____

ASSESSOR'S PARCEL NUMBER(S) OF EXISTING PROPERTY:

_____-_____-_____ _____-_____-_____ _____-_____-_____ _____-_____-_____

_____-_____-_____ _____-_____-_____ _____-_____-_____ _____-_____-_____

EXISTING WATER/SEWER (Y/N) :_____ IF YES,
WATER MAIN SIZE:_____ SEWER MAIN SIZE:_____

EXISTING WELL (Y/N):_____ IF YES, ***Wells must be formally abandoned as part of this water service application. Contact the local office of the Arizona Dept of Water Resources (778-7202) for the requirements.***

PROJECT DESCRIPTION: # OF PROPOSED UNITS_____ # OF PROPOSED LOTS_____
OTHER_____
_____
_____

FEES:

□	**$ 50.00 LOT SPLIT**	□	**$ 50.00 SINGLE FAMILY RESIDENCE**
□	**$200.00 SUBDIVISION**	□	**$200.00 MULTI-FAMILY, MOBILE HOME PARK**

(OFFICE USE ONLY)

□ LEGIBLE LEGAL DESCRIPTION INCLUDED
□ SITE PLAN/PLAT INCLUDED
□ FILING FEE INCLUDED: AMOUNT $_____
□ WITHIN CITY OF PRESCOTT □ OUTSIDE OF CITY LIMITS (COUNTY)

REVIEWER SIGNATURE:_____DATE:_____

(PLANNING USE ONLY)

PRE-APPLICATION CONFERENCE _____ YES _____ NO IF YES, PAC NO:_____

GIS MAP ATTACHED _____ YES _____ NO

COMMENTS:_____

IN COMPLIANCE WITH:
□ SPECIFIC AREA PLAN
□ NEIGHBORHOOD PLAN
□ LOCAL HISTORIC DISTRICT PLAN
□ OPEN SPACE, TRAIL, PARK OR RECREATION PLAN
□ GROWTH PLANNING OR GROWTH MANAGEMENT PLAN
□ REDEVELOPMENT PLAN
□ OTHER ADOPTED, APPLICABLE CITY PLAN OR POLICY

REVIEWER SIGNATURE:_____DATE:_____

(PUBLIC WORKS USE ONLY)

1. COUNCIL APPROVAL DATE:_____ COUNCIL DENIAL DATE:_____

REVIEWER SIGNATURE:_____DATE:_____

2. ADMINISTRATIVE APPROVAL DATE:_____ ADMINISTRATIVE DENIAL DATE:_____

REVIEWER SIGNATURE:_____DATE:_____

3. IN COMPLIANCE WITH CIRCULATION PLAN? _____YES _____NO

REVIEWER SIGNATURE:_____DATE:_____

4. IN COMPLIANCE WITH CAPITAL IMPROVEMENT PLAN? _____YES _____NO

REVIEWER SIGNATURE:_____DATE:_____

Water Allocation Criteria System

EFFECTIVE DECEMBER 31, 1998, ALL RESIDENTIAL DEVELOPMENT WITHIN THE CITY'S WATER SERVICE AREA DESIRING TO UTILIZE THE CITY'S WATER SYSTEM AND NOT HAVING A 100 YEAR ASSURED WATER SUPPLY CERTIFICATION, SHALL BE REQUIRED TO OBTAIN A WATER SERVICE AGREEMENT (WSA). SUCH AN AGREEMENT SHALL BE REQUIRED AS PART OF THE APPROVAL OF A PRELIMINARY SUBDIVISION PLAT, OR THE AMENDMENT OF A PREVIOUSLY APPROVED PRELIMINARY OR FINAL SUBDIVISION PLAT IN WHICH THE AMENDMENT INCREASES THE NUMBER OF RESIDENTIAL LOTS OR RESIDENTIAL UNITS. SUCH AN AGREEMENT SHALL ALSO BE REQUIRED PRIOR TO THE ISSUANCE OF ANY BUILDING PERMIT FOR MULTIPLE FAMILY HOUSING (DEFINED AS TWO OR MORE RESIDENTIAL UNITS), MOBILE HOME PARKS, LOT SPLITS, RESIDENTIAL SUBDIVISIONS APPROVED BY OTHER GOVERNMENTAL JURISDICTIONS, OR ANY OTHER RESIDENTIAL DEVELOPMENT NOT SUBJECT TO THE CITY OF PRESCOTT'S PRELIMINARY AND FINAL SUBDIVISION PLATTING APPROVAL PROCESS.

WATER SERVICE SHALL ONLY BE MADE BY AGREEMENT APPROVED BY THE PRESCOTT CITY COUNCIL FOR FOUR (4) OR MORE LOTS, OR ADMINISTERED BY STAFF FOR 1-3 LOTS. SUCH AGREEMENTS MAY SET FORTH THE TERMS AND CONDITIONS OF WATER SERVICE, INCLUDING, BUT NOT LIMITED TO: VOLUME OF APPROVED WATER; TIME PERIODS TO USE OR LOSE THE WATER ALLOCATION; THIRD PARTY APPROVAL REQUIREMENTS; CITY SEWER USE AND EFFLUENT OWNERSHIP AND USE RIGHTS; ANY SPECIAL FEES OR ASSESSMENTS; AND STIPULATIONS AND REQUIREMENTS REGARDING THE USE OF THE PROPERTY TO BE DEVELOPED AS SET FORTH IN A RESIDENTIAL DEVELOPMENT PLAN.

AGREEMENTS FOR WATER SERVICE SHALL ONLY BE APPROVED WITHIN THE LIMITS OF THE APPROVED PRESCOTT WATER BUDGET, UNLESS AMENDED OR WAIVED BY THE PRESCOTT CITY COUNCIL.

AGREEMENTS FOR WATER SERVICE SHALL ONLY BE APPROVED FOR RESIDENTIAL DEVELOPMENT PLANS, OR FOR A COMMERCIAL/INDUSTRIAL PROJECT IF WATER USE IS LESS THAN FIVE (5) ACRE FEET PER YEAR, DETERMINED BY THE PRESCOTT CITY COUNCIL TO BE IN COMPLIANCE WITH ALL APPLICABLE CITY DEVELOPMENT REGULATIONS, TO BE CONSISTENT WITH AND CONFORM TO THE CITY'S ADOPTED GENERAL PLAN, AND TO BE CONSISTENT WITH AND CONFORM TO ANY AND ALL ADOPTED AND APPLICABLE PLANS:

(A) SPECIFIC AREA PLAN;
(B) NEIGHBORHOOD PLAN;
(C) LOCAL HISTORIC DISTRICT PLAN;
(D) CIRCULATION PLAN;
(E) OPEN SPACE, TRAIL, PARK OR RECREATION PLAN;
(F) GROWTH PLANNING OR GROWTH MANAGEMENT PLAN;
(G) CAPITAL IMPROVEMENT PLAN;
(H) REDEVELOPMENT PLAN; AND/OR
(I) OTHER ADOPTED, APPLICABLE CITY PLAN OR POLICY.

IN DETERMINING WHETHER A DEVELOPMENT IS CONSISTENT WITH AND CONFORMS TO THE GENERAL PLAN AND ANY OF THE IDENTIFIED OTHER APPLICABLE AND ADOPTED PLANS OR POLICIES, THE OVERALL INTENT AND GOALS OF THE APPLICABLE PLAN OR POLICY SHALL BE CONSIDERED, AND THE DEVELOPMENT PLAN SHALL ALSO BE EVALUATED AS TO WHETHER IT FURTHERS THE IMPLEMENTATION OF, AND IS NOT CONTRARY TO, THE POLICIES, GOALS, OBJECTIVES, STRATEGIES AND APPLICABLE ELEMENTS OF THE PLANS AND POLICIE

City Plans Evaluation

CITY COUNCIL POLICY IS THAT WATER SERVICE BE EVALUATED FOR GIVEN PROJECTS THAT ARE CONSISTENT WITH AND FURTHER THE IMPLEMENTATION OF ADOPTED CITY PLANS. THESE INCLUDE THE 2003 GENERAL PLAN, SPECIFIC AREA PLANS, HISTORIC DISTRICT PLANS, CIRCULATION PLANS, NEIGHBORHOOD PLANS, OVERLAY DISTRICTS AND OPEN SPACE AND TRAIL PLANS. SOME EXAMPLES OF ACTIVITIES THAT WOULD BE CONSISTENT WITH AND FURTHER THE IMPLEMENTATION OF PLANS ARE:

2003 General Plan

PROTECTION OF NATURAL FEATURES

WORK FORCE HOUSING

CREATION OF EMPLOYMENT THAT EXCEEDS YAVAPAI COUNTY MEDIAN WAGE

CONTINUATION OR CREATION OF PUBLIC TRAILS

PROVISION OF ALTERNATIVE TRANSPORTATION AMENITIES SUCH AS BIKE TACKS AND BUS PULL-OUTS

PROVISION OF PEDESTRIAN AMENITIES SUCH AS SIDEWALKS SEPARATED FROM ROADS AND PATHS AND WALKWAYS CONNECTING NEIGHBORHOODS.

Circulation Plans

STREET EXTENSIONS CONSISTENT WITH A PLAN

PROVISION OF ADDITIONAL EMERGENCY ACCESS

CREATION OF SHARED ACCESS POINTS

MINIMIZATION OF CURB CUTS

ROW LANDSCAPING

PROVISION OF TRAFFIC CALMING DEVICES

Downtown Master Plan

COMPATIBLE ARCHITECTURE

ESTABLISHMENT OF STREET TEES

SETBACKS CONSISTENT WITH A BLOCK

MIXED USES SUCH AS RESIDENTIAL ABOVE RETAIL

Specific Area Plans

CONSISTENT LAND USE OR REZONE TO RECOMMENDED USE

STREET CREATIONS OR EXTENSIONS

INFRASTRUCTURE EXTENSIONS

PROTECTION OF NATURAL FEATURES

PRESERVATION OF OPEN SPACE CONSISTENT WITH PLAN

Utility Plans

Water Model & Master Plan (Main extension, main size, storage & pumping)
Sewer Model & Master Plan (Main extension, main size, pretreatment, pumping, effluent quality)

CITY OF PRESCOTT

ENGINEERING SERVICES/PUBLIC WORKS DEPARTMENTS
433 N VIRGINIA ST, PRESCOTT, AZ 86302
(928) 777-1130 (F) 928-771-5929

LAYER AND SURVEY DATUM REQUIREMENTS

When submitting survey datum and layer information for engineering plans that are to be submitted to the City of Prescott, (i.e.: final plat, preliminary plat and revision of plat, improvement plans for subdivision and commercial site improvements, as-built plans, etc.), those plans must meet the following survey datum and layer requirements:

1. Datum will be in international feet for horizontal and vertical, NAVD 88 for vertical and City of Prescott co-ordinates for horizontal. Please refer to **Exhibit A** titled, "City of Prescott Survey Datum Requirements."

2. A survey block or note listing two (2) on-site points conforming to "City of Prescott Survey Datum Requirements" must be provided. These two points must have a Northing, Easting and a NAVD 88 elevation.

3. Centerline monuments should be rebar in a hand-hole at all PC's, PT's and intersections. Right-of-Way monuments should be a rebar in concrete at PC's, PT's and angle points. See **Exhibit B**, "Y.A.G. Standard Detail 120-1P entitled, "Survey Marker."

4. Works will be submitted in their entirety in digital electronic format which is compatible with the City's system as follows: CADD-- .DGN (microstation), .DWG (Auto CADD), .DXF (generic) and must conform to the City's layer and feature requirements listed below:

"CITY OF PRESCOTT LAYER REQUIREMENTS"	
CONTROL LAYERS	**STORM DRAIN LAYER**
CONTROL: GPS ground control	STORMLIN: Storm lines
SECCOR: Section corners	STORMSTR: Storm points or nodes
RGTOFWAY: Right of Ways	EXISTSTORM: Existing storm drain features
PARCELS: Property lines	
WATER LAYERS	**UTILITY LAYERS MISC.**
HYDRANT: Water hydrants	EASEMENT: Easements
WATERSTR: Water points or nodes	EXISTMISC: Existing misc. features
WATERMAIN: Water lines	GAS: Gas lines and features
EXISTWATER: Existing water features	CABLE/TV: Cable, Phone and TV lines
SEWER LAYERS	ELEC: Electric lines and features
SEWERSTR: Sewer points or nodes	**ROAD FEATURES**
SEWERMAIN: Sewer lines	CNTRLIN: Street centerlines
LIFTSTAT: Lift Stations	CURB: Curb and gutter
EXISTSEWER: Existing sewer features	SIDEWALKS: Sidewalks
	EDGEPAVE: Edge of pavement or uncurbed areas
SURROUNDING FEATURES	UNPAVEDROAD: Unpaved roads
BUILDING: Buildings	
FENCES: Fences and walls	

CITY OF PRESCOTT
ENGINEERING SERVICES/PUBLIC WORKS DEPARTMENTS
430 N. VIRGINIA ST, PRESCOTT, AZ 86302
(928) 777-1130 (F) 928-771-5929

"EXHIBIT A"

"CITY OF PRESCOTT SURVEY DATUM REQUIREMENTS"			
COORDINATE UNITS:		International Feet	
DISTANCE UNITS:		International Feet	
HEIGHT UNITS:		International Feet	
VERTICAL DATUM:		NAVD 88	
STATE PLANE			
COORDINATE SYSTEM:		US State Plane 1983	
DATUM:		(WGS 84)	
ZONE:		Arizona Central 0202	
GEOID MODEL:		GEOID99 (Conus)	
CITY OF PRESCOTT – CONVERSION FROM STATE PLANE			
NORTHING:		(State Plane x 1.000329975) – 701,456.0090	
EASTING:		(State Plane x 1.000329975) + 69,457.2499	
STATE PLANE – CONVERSION FROM CITY OF PRESCOTT			
NORTHING:		(City of Prescott + 701,456.0090) x 0.999670134	
EASTING:		(City of Prescott – 69,457.2499) x 0.999670134	
EXAMPLE CITY OF PRESCOTT MINGO BASE			
LATITUDE	34°	34'	29.27969" N
LONGITUDE	112°	28'	48.72638" W
HEIGHT	5582.412'		

STATE PLANE	COORDINATES	CITY OF PRESCOTT GRID
NORTHING	1,301,026.703	600,000.0000
EASTING	530,367.742	600,000.0000
ELEVATION	5,673.955'	5,673.955'
Control provided by the City of Prescott will be in the City of Prescott Coordinate System.		

INTERNATIONAL FEE & U.S. FEET CONVERSIONS	
U.S. Feet to International Feet	U.S. Feet x 1.00000200
International Feet to U.S. Feet	International Feet x 0.99999800

1. When converting elevations, the difference is negligible; 0.011, for example: 5673.955 International Feet = 5673.944 U.S. Feet.

2. When converting State Plane, the difference is unacceptable:
   Northing: 1,301,026.703 International Feet = 1,301,024.101 U.S. Feet
   Easting: 530,367.742 International Feet = 530,366.681 U.S. Feet
   The difference in coordinates is 2.602 feet in the Northings and 1.061 feet in the Eastings which is a locational difference of 2.810 feet.

Y.A.G. Standard Detail
120-1P/ Survey Marker

"EXHIBIT B"

NOTES:

1. TYPE 'A' TO BE USED AT INTERSECTIONS OF MAJOR STREETS & COLLECTOR STREETS, AND AT OTHER SPECIAL POINTS IF REQUIRED BY ENGINEER, AS SHOWN ON PLANS.
2. TYPE 'A' TO BE USED AT INTERSECTION OF STREET CENTERLINES, CORNERS OR CHANGES IN ALIGNMENT OF SUBDIVISION BOUNDARIES (WHEN THEY FALL IN PAVEMENT), P.C.'S AND P.T.'S OF CURVES.
3. *TYPE 'C' TO BE USED AT PC, PT, AND PI POINTS ON RIGHT-OF-WAY AND SUBDIVISION BOUNDARIES WHERE SUCH POINTS FALL OUTSIDE OF PAVED AREAS ONLY.*
4. FRAME & COVER TO INCLUDE CHAIN PER DET. 270. (OPTIONAL PER AGENCY REQUIREMENTS.)

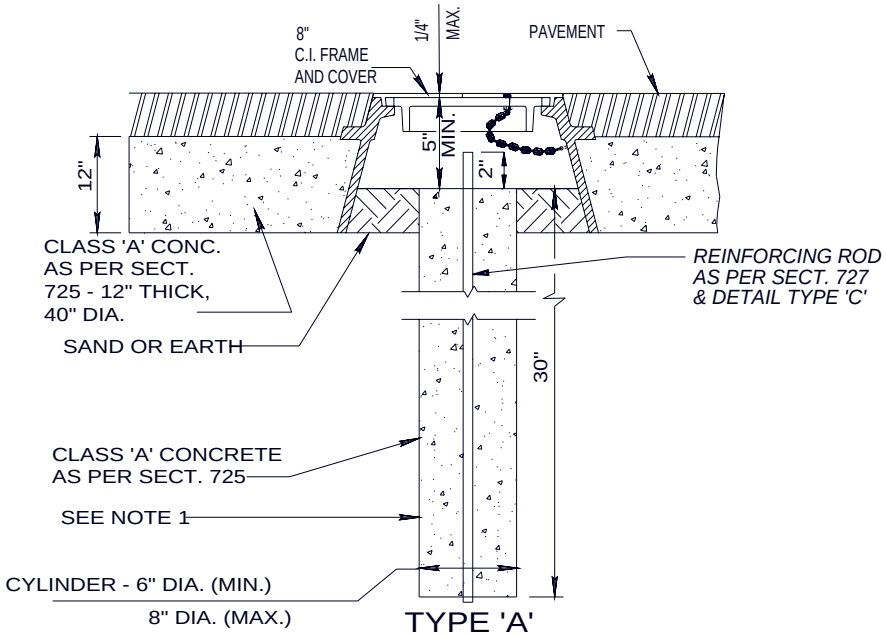

TYPE 'A'

(WITH FRAME PER DETAIL 270)

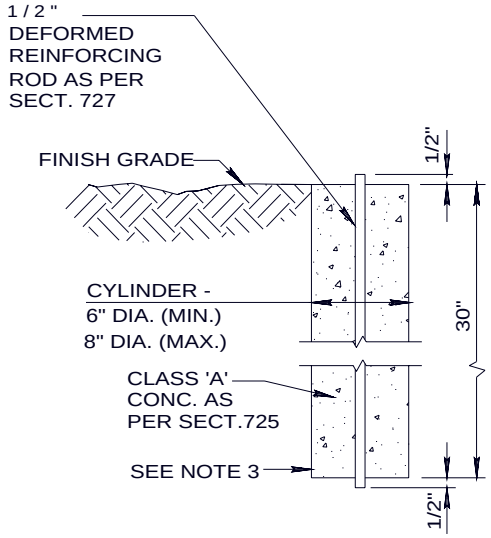

TYPE 'C'

OUTSIDE PAVED AREAS ONLY

revised 08/05

DETAIL NO.			DETAIL NO.
120-1P	YAG STANDARD DETAIL	SURVEY MARKER	120-1P