100 SERIES: GENERAL INFORMATION

DETAIL	TITLE
100P	INDEX
101P	GENERAL NOTES
103P	WATER PLAN NOTES
104P	SEWER PLAN NOTES
105P–1	GRADING AND DRAINAGE NOTES
105P–2	EROSION AND SEDIMENTATION CONTROL NOTES
106P–1	SIGNING AND STRIPING NOTES
106P–2	TRAFFIC SIGNAL NOTES
120Q	SURVEY MARKER
131Q	SIGN POST INSTALLATION
132P	STREET NAME SIGN
134Q–1	MAILBOX
134Q–2	MAILBOX
140Q	BOLLARD
144P	SANITATION DUMPSTER
145Q	SAFETY RAIL
170P	BASE MOUNTED LUMINAIRE
173P	ANTIQUE STREETLIGHT FOUNDATION

200 SERIES: STREET INFORMATION

DETAIL	TITLE
200Q	TRENCH BACKFILL AND SURFACE REPLACEMENT
201Q	THICKENED EDGE PAVEMENT SECTION
210Q	RESIDENTIAL SPEED HUMP
212Q	SOFT DIG POTHOLE REPAIR
220Q–1	CURB AND GUTTER TYPES A,B,C, AND D
220Q–2	3' ROLL CURB
221Q	CURB AND GUTTER TRANSITIONS
230Q	SIDEWALKS
231Q	LOCAL STREET SIDEWALK RAMP
232Q	DIRECTIONAL SIDEWALK RAMPS
233Q–1	MIDBLOCK DETACHED SIDEWALK RAMP
233Q–2	MIDBLOCK ATTACHED SIDEWALK RAMP
240Q–1	6' VALLEY GUTTER AND SPANDRELS
240Q–2	12' VALLEY GUTTER AND SPANDRELS
250Q–1	DRIVEWAY ENTRANCE W/DETACHED SIDEWALK
250Q–2	DRIVEWAY ENTRANCE W/ATTACHED SIDEWALK
251Q	RETURN TYPE DRIVEWAY
251PV–2	3' ROLL CURB DRIVEWAY
255P	RESIDENTIAL DRIVEWAY SECTION
270Q	8" FRAME AND COVER ADJUSTMENT
275Q	UTILITY CASING

300 SERIES: WATER INFORMATION

DETAIL	TITLE
301Q	VALVE BLOCKING
303Q–1	JOINT RESTRAINT FOR DIP WATER PIPES (DRAWING)
303Q–2	JOINT RESTRAINT FOR DIP WATER PIPES (TABLES)
303Q–3	REVERSE THRUST BLOCKING ACP
303Q–4	REVERSE THRUST BLOCKING PVC–DIP
310PV–1	⅝" THROUGH 1" METER BOX APPLICATIONS
310PV–2	1½" THROUGH 2" METER BOX APPLICATIONS
310PV–3	⅝" THROUGH 1" WATER SERVICE CONNECTION
310PV–4	1½" TO 2" WATER SERVICE CONNECTIONS
316P	1" TO 2" WATER SERVICE CONNECTIONS
317Q–1	1" AIR VACUUM RELEASE VALVE ASSEMBLY
317Q–2	2" TO 4" AIR RELEASE VALVE
318P	BLOW OFF
319Q–1	TRACER WIRE
319Q–2	TRACER WIRE STATION
321Q	LARGE METER AND VAULT
323Q	PRESSURE REDUCING VALVE STATION
324Q–1	BACKFLOW PREVENTION ASSEMBLY 3" AND UNDER
324Q–2	BACKFLOW PREVENTION ASSEMBLY 4" OR LARGER
340Q–1	TAPPING SLEEVES AND VALVES
340Q–2	EXPOSING WATER MAIN FOR HOT TAP
360Q	FIRE HYDRANT INSTALLATION
362Q	LOCATIONS FOR NEW FIRE HYDRANTS
363Q	FIRE HYDRANT VERTICAL DEFLECTION
364P	FIRE HYDRANT PROTECTION POLES
370Q	VERTICAL REALIGNMENT OF WATER MAINS
371PV	UTILITY SEPARATION
390Q	BLOW OFF
391Q	VALVE BOX INSTALLATION
395PV	ASBESTOS CEMENT PIPE
396PV	UTILITY ABANDONMENT IN PLACE

400 SERIES: SEWER INFORMATION

DETAIL	TITLE
402P	DRY UTILITY SEPARATION
404P–1	WATER AND SANITARY SEWER SEPARATION/PROTECTION
404P–2	WATER AND SANITARY SEWER SEPARATION/PROTECTION
404PV	WATER AND SEWER SEPARATION/PROTECTION
405Q	BROKEN SEWER LINE REPLACEMENT
412Q	MANHOLE/VAULT STEPS
414P	UTILITY MAIN EXPOSURE
416Q	SANITARY FORCE MAIN AIR/VACUUM RELEASE VALVE
420Q–1	PRECAST CONCRETE SEWER MANHOLE
420Q–2	MANHOLE IN DRAINAGEWAYS
421Q	OFFSET MANHOLE 8" TO 30" PIPE
422Q	MANHOLE FRAME ADJUSTMENT
423P–1	24" CAST IRON FRAME AND COVER
423P–2	30" CAST IRON FRAME AND COVER

400 SERIES: SEWER INFORMATION (CONT.)

DETAIL	TITLE
426Q–1	INSIDE DROP MANHOLE
426Q–2	BEAVER SLIDE MANHOLE
427Q	SEWER STUB–OUT AND PLUGS
440P–1	SEWER SERVICE LATERAL GREATER THAN 2' DEEP
440P–2	SEWER SERVICE LATERAL LESS THAN 2' DEEP
440P–3	BACKWATER VALVE
440Q–4	WATER/SEWER SERVICE CURB CROSSING STAMP
440PV	SEWER CLEANOUT – DOUBLE
441Q	SEWER MAIN CLEANOUT
443PV	SEWER MANHOLE VACUUM TESTING
444PV	SEWER AND STORM DRAIN CLEANING
445PV	TELEVISION INSPECTION
446PV	CONSHIELD ADDITIVE

500 SERIES: IRRIGATION AND STORM DRAIN

DETAIL	TITLE
523PV–3	CMP MANHOLE ACCESS RISER
523PV–6	INLET DROP STRUCTURE
556PV	HYDROSEED REQUIREMENTS

600 SERIES: TRAFFIC ENGINEERING

DETAIL	TITLE
600Q	INTERSECTION APPROACH TYPICAL SECTION
601P	RURAL LOCAL RESIDENTIAL X–SECTION
602P	LOCAL RESIDENTIAL X–SECTION
603P	RESIDENTIAL COLLECTOR
604P	COMMERCIAL/INDUSTRIAL COLLECTOR
605P	MINOR ARTERIAL
606P	MAJOR ARTERIAL
610Q	PRIVATE GATED ACCESS AT PUBLIC ROADWAY
611P	INTERSECTION SIGHT VISIBILITY TRIANGLES
612P	UTILITY EASEMENT ACCESS ROAD
614P	FIRE LANE ACCESS
620P –1	CUL–DE–SAC 50' R/W
620P–2	CUL–DE–SAC 60' R/W
621P–1	OFFSET CUL–DE–SAC 50' R/W
621P–2	OFFSET CUL–DE–SAC 60' R/W
622P–1	KNUCKLE 50' R/W
622P–2	KNUCKLE 60' R/W
630P	PAINTED CROSSWALK AT INTERSECTION
631Q	STANDARD CROSSWALK MARKINGS
632Q	STOP MARKINGS
634P	PAVEMENT MARKINGS
640Q	TRAFFIC SIGNAL INTERCONNECT CONDUIT
650Q–1	RESIDENTIAL RIGHT IN/RIGHT OUT DRIVEWAY
650Q–2	COMMERCIAL RIGHT IN/RIGHT OUT DRIVEWAY

1. ALL CONSTRUCTION SHALL CONFORM TO MARICOPA ASSOCIATION OF GOVERNMENTS (MAG), & CITY OF PRESCOTT (COP) CONSTRUCTION STANDARDS & SPECIFICATIONS. LATEST REVISIONS, UNLESS SPECIFICALLY APPROVED BY THE CITY AND MODIFIED ON THE PLANS, IN CONJUNCTION WITH THE LATEST REVISIONS OF THE MARICOPA ASSOCIATION OF GOVERNMENTS STANDARD SPECIFICATIONS AND DETAILS (MAG STANDARDS), UNLESS SPECIFICALLY MODIFIED ON THE PLANS.
2. IT SHALL BE THE CONTRACTOR'S RESPONSIBILITY TO OBTAIN COPIES OF MAG AND CITY OF PRESCOTT STANDARDS AND SPECIFICATIONS AS WELL AS ALL OTHER STANDARDS AND SPECIFICATIONS NECESSARY TO COMPLETELY AND ACCURATELY INTERPRET THESE PLANS.
3. ALL PLANS SIGNED BY THE CITY ENGINEER ARE NULL AND VOID ONE YEAR FROM DATE OF SIGNATURE IF CONSTRUCTION HAS NOT STARTED. RESUBMITTAL AND REVIEW SHALL BE REQUIRED, AFTER ONE YEAR.
4. ALL QUANTITIES SHOWN ON THE PLANS ARE APPROXIMATE, ARE NOT VERIFIED BY THE PUBLIC WORKS DIRECTOR, AND ARE FURNISHED SOLELY FOR THE CONTRACTOR'S CONVENIENCE. THEY DO NOT NECESSARILY CORRESPOND TO BID SCHEDULE ITEMS. PAYMENT SHALL BE BASED ON BID SCHEDULE ITEMS FOR ACTUAL QUANTITIES PROVIDED AND INSTALLED. THE CONTRACTOR SHALL NOT BE RELIEVED OF HIS RESPONSIBILITY FOR INDEPENDENTLY ESTIMATING WORK QUANTITIES PRIOR TO BIDDING.
5. CITY OF PRESCOTT PUBLIC WORKS DEPARTMENT PERMID(S) WILL BE REQUIRED FOR ALL OFF-SITE CONSTRUCTION AND CONSTRUCTION WITHIN THE PUBLIC RIGHT OF WAY.
6. IT IS THE SOLE RESPONSIBILITY OF THE CONTRACTOR TO OBTAIN, AT HIS OWN EXPENSE, SUCH PERMITS AS ARE REQUIRED FROM THE APPROPRIATE AGENCIES.
7. THE PUBLIC WORKS DEPARTMENT SHALL BE NOTIFIED A MINIMUM OF 24 HOURS PRIOR TO BEGINNING ANY CONSTRUCTION IN THE PUBLIC RIGHT OF WAY.
8. ANY WORK PERFORMED WITHOUT THE KNOWLEDGE AND APPROVAL OF THE PUBLIC WORKS DIRECTOR AND/OR ALL WORK MATERIALS NOT IN CONFORMATION WITH THE PLANS AND SPECIFICATIONS IS SUBJECT TO REMOVAL AND REPLACEMENT AT THE CONTRACTOR'S EXPENSE.
9. A THOROUGH ATTEMPT HAS BEEN MADE TO SHOW THE LOCATION OF ALL UNDERGROUND OBSTRUCTIONS AND UTILITY LINES IN THE WORK AREA. THE ENGINEER AND THE CITY OF PRESCOTT WILL NOT GUARANTEE ANY LOCATIONS OR ELEVATIONS OF EXISTING UNDERGROUND UTILITIES SHOWN ON THESE PLANS. THE CONTRACTOR SHALL BE RESPONSIBLE AND SHALL NOT BE RELIEVED OF RESPONSIBILITY FOR MAKING A COMPLETE AND ACCURATE ON-SITE DETERMINATION OF THE LOCATIONS, MATERIAL, AND SIZE OF ALL UTILITIES, STRUCTURES, AND FIELD CONDITIONS WHICH MAY AFFECT THE PROGRESS OF THE WORK. THE CONTRACTOR SHALL BE RESPONSIBLE FOR ANY DAMAGE TO STRUCTURES AND UTILITIES ENCOUNTERED DURING CONSTRUCTION AND SHALL FIELD EXPOSE EXISTING UNDERGROUND UTILITIES PRIOR TO TRENCHING IN THEIR VICINITY.
10. THE CONTRACTOR IS REQUIRED TO CONTACT BLUE STAKE (1-800-STAKEIT) A MINIMUM OF TWO WORKING DAYS (48) HOURS PRIOR TO COMMENCEMENT OF CONSTRUCTION. THE APPROPRIATE UTILITY COMPANIES SHALL BE NOTIFIED BY THE CONTRACTOR PRIOR TO ANY CONSTRUCTION.
11. THE CONTRACTOR SHALL BE RESPONSIBLE FOR COORDINATING THE RELOCATION AND/OR SUPPORT OF ALL UTILITIES, POWER POLES, ETC., THAT MAY BE NECESSARY.
12. THE CONTRACTOR SHALL BE RESPONSIBLE FOR SUBMITTING TO THE PUBLIC WORKS DEPARTMENT FOR APPROVAL, TRAFFIC CONTROL PLANS PRIOR TO BEGINNING CONSTRUCTION. THE CONTRACTOR SHALL DETERMINE AND SUBMIT FOR APPROVAL THE EXACT SIGNING/TRAFFIC CONTROL DEVICES NECESSARY AND ALL TRAFFIC CONTROL WORK SHALL BE IN ACCORDANCE WITH THE LATEST REVISIONS THEREOF. NO STREET IS TO BE CLOSED, RESTRICTED, OR CONSTRUCTED UPON UNTIL A TRAFFIC CONTROL PLAN IS PREPARED BY THE CONTRACTOR AND SUBMITTED TO THE PUBLIC WORKS DIRECTOR ONE WEEK IN ADVANCE FOR REVIEW AND APPROVAL.
13. APPROPRIATE EMERGENCY AGENCIES SHALL BE NOTIFIED A MINIMUM OF 24 HOURS PRIOR TO ANY CLOSING OF STREETS.
14. THE CONTRACTOR SHALL BE RESPONSIBLE FOR CONSTRUCTION SURVEYING AND LAYOUT WITH CONTROL PROVIDED BY THE DESIGN ENGINEER OR HIS DESIGNEE.
15. THE CONTRACTOR IS RESPONSIBLE FOR QUALITY CONTROL MEASURES SUFFICIENT TO PRODUCE MATERIALS AND WORKMANSHIP OF ACCEPTABLE QUALITY. PRIOR TO CONSTRUCTION THE CONTRACTOR SHALL SUBMIT A QUALITY CONTROL PLAN. THE CONTRACTOR AT HIS OWN EXPENSE SHALL PROVIDE AN INDEPENDENT GEOTECHNICAL FIRM TO PERFORM QUALITY CONTROL TESTING SUCH AS SOILS AND CONCRETE TESTING, AND FULL TIME ASPHALTIC CONCRETE LAYDOWN COMPACTION TESTING AND ADEQUATE PLANT CONTROL FOR EACH PAVING DAY. THE CITY, BY SEPARATE CONTRACT, WILL BE RESPONSIBLE FOR QUALITY ASSURANCE TESTING AS IT MAY DEEM NECESSARY.
16. THE CONTRACTOR WILL BE RESPONSIBLE FOR ALL COSTS OF TESTING AND INSPECTION, INCLUDING THE PRESENCE OF CITY INSPECTORS, REQUIRED AT NIGHT OR ON WEEKENDS.
17. THE CONTRACTOR SHALL BE RESPONSIBLE FOR ALL RE-WORK AND/OR REMOVAL AND REPLACEMENT OF ALL MATERIALS REPRESENTED BY FAILING TESTS OR SUBSTANDARD WORKMANSHIP.
18. THE CONTRACTOR SHALL IMPLEMENT BEST-HOUSE-KEEPING MEASURES, AND EROSION AND SEDIMENT CONTROL MEASURES, TO PREVENT THE TRANSPORT OF CONSTRUCTION MATERIALS INTO DRAINAGE INLETS, STORM DRAIN MANHOLES, UTILITY STRUCTURES, OR ONTO ADJACENT STREETS AND PROPERTIES.
19. APPROVAL OF A PORTION OF THE WORK IN PROGRESS DOES NOT GUARANTEE ITS FINAL ACCEPTANCE. TESTING AND EVALUATION MAY CONTINUE UNTIL THE WRITTEN FINAL ACCEPTANCE OF A COMPLETE AND WORKABLE UNIT.
20. THE CITY OF PRESCOTT MAY SUSPEND THE WORK BY WRITTEN NOTICE WHEN, IN ITS JUDGEMENT, PROGRESS IS UNSATISFACTORY, WORK BEING DONE IS UNAUTHORIZED OR DEFECTIVE, WEATHER CONDITIONS ARE UNSTABLE, OR THERE IS A DANGER TO THE PUBLIC HEALTH AND SAFETY.
21. ALL OBSTRUCTIONS IN THE RIGHT OF WAY SHALL BE REMOVED BEFORE ANY CONSTRUCTION IS PERMITTED.
22. REMOVAL OF STRUCTURES AND OBSTRUCTIONS AS NECESSARY TO COMPLETE THE WORK, OTHER THAN SPECIFICALLY SCHEDULED IN THE BID, IS INCIDENTAL TO THE CONTRACT. NO SEPARATE MEASUREMENT OF OR PAYMENT FOR UNSCHEDULED REMOVAL ITEMS WILL BE MADE.
23. CLEARING AND GRUBBING IS CONSIDERED INCIDENTAL TO THE WORK UNLESS SPECIFICALLY IDENTIFIED IN THE BID SCHEDULE. NO SEPARATE MEASUREMENT OF OR PAYMENT FOR CLEARING AND GRUBBING, AND TREE REMOVAL, WILL BE MADE. THE SITE OF ALL EXCAVATION, EMBANKMENTS, AND FILLS SHALL FIRST BE CLEARED OF STUMPS, TRASH, WEEDS, RUBBISH, TOPSOIL, AND LOOSE BOULDERS WHICH SHALL BE REMOVED AND DISPOSED OF. PRIOR TO BIDDING THE CONTRACTOR MUST SATISFY HIMSELF REGARDING THE CHARACTER OF THE SUBSOILS TO INCLUDE THE AMOUNT OF LOAM, CLAY, SAND, QUICKSAND, HARDPAN, GRAVEL, ROCK, WATER, AND ALL OTHER MATERIAL TO BE ENCOUNTERED AND WORK TO BE PERFORMED.
24. THE CONTRACTOR SHALL GUARD AGAINST DAMAGE DURING CONSTRUCTION TO EXISTING PROPERTIES AND IMPROVEMENTS. ANY ITEMS DAMAGED BY THE CONTRACTOR'S ACTIVITIES SHALL BE REPLACED IN KIND OR BETTER AT THE CONTRACTOR'S EXPENSE.
25. THE CONTRACTOR SHALL KEEP SUITABLE EQUIPMENT ON HAND AT THE JOBSITE FOR MAINTENANCE DUST CONTROL, AND SHALL CONTROL DUST AS DIRECTED BY THE APPROPRIATE AGENCY.
26. STREET AND TRAFFIC SIGNS SHALL BE RELOCATED BY THE CONTRACTOR IF NECESSARY, AT THE DIRECTION OF THE PUBLIC WORKS DIRECTOR.
27. BACKFILL COMPACTION SHALL BE TYPE 1 (MAG, SECTION 601) UNLESS OTHERWISE NOTED.
28. AGGREGATE BASE COURSE SHALL NOT BE PLACED ON SUBGRADE UNTIL SUBGRADE REQUIREMENTS HAVE BEEN ACHIEVED.
29. NO PAVING CONSTRUCTION SHALL BE STARTED UNTIL ALL UNDERGROUND UTILITIES WITHIN THE ROADWAY PRISM ARE VERIFIED FOR DETAIL CONFORMANCE, COMPLETED AND TESTED (TO INCLUDE BUT NOT LIMITED TO) SEWER TESTING, LOW AIR TESTING OF MAIN LINE AND SERVICES, TRACE WIRE TESTING, DEFLECTION TESTING AND VERIFICATION OF MANHOLES CONFORMING TO COP DETAIL 420P. WATER TESTING CHLORINATION/DISINFECTING OF MAIN LINE AND SERVICES, PRESSURE TESTING, TRACE WIRE TESTING AND VERIFICATION OF VALVE BOXES CONFORMING TO COP DETAIL 391P.
30. ALL ASPHALT CONCRETE PAVEMENT SHALL BE PER APPLICABLE MAG SPECIFICATIONS AS AMENDED BY THE CITY OF PRESCOTT. ASPHALT CONCRETE MIX DESIGN SHALL BE SUBMITTED TO THE PUBLIC WORKS DIRECTOR OR HIS DESIGNEE FOR APPROVAL PRIOR TO START OF CONSTRUCTION.
31. ALL UTILITY FRAMES, COVERS, VALVE BOXES, MANHOLES, ETC. SHALL BE ADJUSTED TO FINISH ASPHALT GRADE AFTER PLACEMENT OF SURFACE COURSE BY THE CONTRACTOR PER COP STANDARD DETAILS.
32. ACCEPTANCE OF THE COMPLETED PAVING STRUCTURES WILL NOT BE GIVEN UNTIL REPRODUCIBLE "AS-BUILT" PLANS HAVE BEEN SUBMITTED BY THE CONTRACTOR AND APPROVED BY THE CITY.
33. ALL CONCRETE TO BE AT LEAST 3000 PSI CLASS "A" PORTLAND CEMENT CONCRETE, UNLESS OTHERWISE SPECIFIED ON THE PLANS, SPECIFICATIONS, OR IN STANDARD DETAILS.
34. EDGES OF CONCRETE STRUCTURES TO HAVE A ¾" CHAMFER, UNLESS OTHERWISE SPECIFIED ON THE PLANS.
35. CONCRETE SURFACES TO HAVE A BROOM FINISH UNLESS OTHERWISE NOTED ON THE PLANS.
36. ALL EXPANSION JOINTS TO BE SEALED WITH ½" EXPANSION JOINT, PRE-FORMED JOINT FILLER AND SEALER, IN ACCORDANCE WITH MAG SECTION 729.
37. DRIVEWAY ENTRANCES WILL BE LOCATED AS SPECIFIED ON THE PLANS UNLESS MODIFIED IN THE FIELD BY THE ENGINEER. ALL DRIVEWAY ENTRANCES SHALL BE CONSTRUCTED OVER 6" THICK AGGREGATE BASE COURSE PER MAG SPECIFICATION 702 AND COMPACTED TO 95% OF STANDARD PROCTOR DENSITY, UNLESS OTHERWISE NOTED.
38. ALL DISTURBED FENCES SHALL BE REPLACED IN KIND. CONTRACTOR SHALL EXTEND FENCE REPLACEMENT TO THE CLOSEST UPRIGHT SUPPORT NECESSARY FOR STABILITY.
39. MAILBOXES SHALL BE REMOVED AND REINSTALLED AS DIRECTED BY THE U.S. POSTAL SERVICE AND THE CITY OF PRESCOTT TEMPORARY LOCATIONS SHALL BE PER U.S.P.S.
40. NO JOB WILL BE CONSIDERED COMPLETE UNTIL ALL CURBS, PAVEMENT, AND SIDEWALKS HAVE BEEN SWEPT CLEAN OF ALL DIRT AND DEBRIS.
41. THE CONTRACTOR SHALL WARRANT ALL WORK FOR A MINIMUM TWO YEAR PERIOD AFTER FORMAL ACCEPTANCE OF THE WORK BY THE CITY.

COP STANDARD DETAIL	GENERAL NOTES	CITY ENGINEER	REVISED: 05/15	DETAIL No. 101P

1. ALL WORK SHALL CONFORM TO MARICOPA ASSOCIATION OF GOVERNMENTS (MAG), & CITY OF PRESCOTT (COP) CONSTRUCTION STANDARDS & SPECIFICATIONS, WHICH ARE ON FILE IN THE OFFICE OF THE CITY ENGINEER.
2. ALL EXISTING FRAMES, COVERS, VALVE BOXES, & MANHOLES SHALL BE EITHER REPLACED OR ADJUSTED TO FINISH GRADE DEPENDING ON PLAN CALL OUT UPON COMPLETION OF PAVING, UTILITY, OR RELATED CONSTRUCTION.
3. ANY QUANTITIES SHOWN ON PLANS ARE NOT VERIFIED BY THE PUBLIC WORKS UTILITIES DIRECTOR.
4. ACCEPTANCE OF THE COMPLETED WORK WILL NOT BE GIVEN UNTIL 3 MIL MYLAR & CAD FORMAT DIGITAL 'AS-BUILT' PLANS ON CITY OF PRESCOTT SURVEY DATUM & COORDINATES HAVE BEEN SUBMITTED & SEALED BY A REGISTERED PROFESSIONAL ENGINEER AND APPROVED BY THE PUBLIC WORKS DEPARTMENT.
5. CITY OF PRESCOTT PUBLIC WORKS UTILITIES SHALL BE NOTIFIED A MINIMUM OF 24 HOURS PRIOR TO THE START OF ANY WORK.
6. ALL WORK & MATERIALS WHICH DO NOT CONFORM TO THE SPECIFICATIONS ARE SUBJECT TO REMOVAL & REPLACEMENT AT THE CONTRACTOR'S EXPENSE.
7. ANY WORK PERFORMED WITHOUT THE KNOWLEDGE OF THE CITY INSPECTOR OR HIS REPRESENTATIVE IS SUBJECT TO REMOVAL & REPLACEMENT AT THE CONTRACTOR'S EXPENSE.
8. THE CONTRACTOR SHALL PROVIDE SUFFICIENT MEN, EQUIPMENT, & MATERIAL ON THE JOB AT ALL TIMES DURING CONSTRUCTION TO COMPLY WITH SPECIFICATIONS & TO COMPLETE THE WORK.
9. CIP INSPECTION TO BE DONE BY THE CITY OF PRESCOTT PUBLIC WORKS DEPARTMENT OR THEIR REPRESENTATIVE. PRIVATE DEVELOPMENTS SHALL PROVIDE FOR INDEPENDENT 3RD PARTY INSPECTIONS.
10. CONTRACTOR TO NOTIFY PROJECT ENGINEER 72 HOURS (3 WORKING DAYS) IN ADVANCE OF CONSTRUCTION TO SCHEDULE CONSTRUCTION CONTROL STAKING.
11. THE CONTRACTOR IS TO UNCOVER ALL EXISTING LINES BEING TIED INTO AND VERIFY GRADES, MATERIAL, SIZE & ELEVATIONS BEFORE COMMENCING CONSTRUCTION & ORDERING MATERIALS.
12. IT IS THE CONTRACTOR'S RESPONSIBILITY TO LOCATE ALL UNDERGROUND PIPELINES, TELEPHONE & ELECTRICAL CONDUITS & STRUCTURES IN ADVANCE OF ANY CONSTRUCTION & OBSERVE ALL POSSIBLE PRECAUTIONS TO AVOID ANY DAMAGE TO SUCH. THE ENGINEER &/OR OWNER WILL NOT GUARANTEE ANY LOCATIONS AS SHOWN ON THESE PLANS, OR THOSE OMITTED FROM SAME.
13. CONTRACTOR SHALL NOTIFY 'BLUE STAKE' AT 1-800-STAKEIT (1-800-782-5348) AT LEAST 48 HOURS PRIOR TO CONSTRUCTION.
14. CONTRACTOR SHALL VERIFY ALL QUANTITIES SHOWN & MAKE HIS BID BASED UPON THOSE VERIFICATIONS. IF ANY DISCREPANCY IN QUANTITIES IS FOUND, THE CONTRACTOR SHALL NOTIFY THE ENGINEER AS SUCH.
15. ARIZONA DEPARTMENT OF ENVIRONMENTAL QUALITY REQUIREMENTS MUST BE COMPLIED WITH.
16. ARIZONA DEPARTMENT OF ENVIRONMENTAL QUALITY REQUIREMENTS SHALL APPLY WHEN MORE STRINGENT THAN THE MAG OR CITY OF PRESCOTT STANDARD SPECIFICATIONS FOR PUBLIC WORKS CONSTRUCTION.
17. ALL PLANS SIGNED BY THE CITY ARE NULL & VOID ONE YEAR FROM DATE OF SIGNATURE IF CONSTRUCTION HAS NOT STARTED AND/OR IS NOT ACTIVELY PROGRESSING.
18. PROJECT CONTRACTOR SHALL BE RESPONSIBLE FOR SUBMITTING TRAFFIC CONTROL PLANS WHICH SHALL BE MADE A PART OF THE PLAN REVIEW REQUEST TO THE CITY ENGINEER FOR APPROVAL.
19. ALL WATER LINES & APPURTENANCES SHALL BE PROVIDED WITH TRACE WIRE PER CITY STANDARD DETAIL. TRACE WIRE SHALL BE SUBJECT TO A TRACEABILITY TEST, EASILY ACCESSIBLE, & ANY DEFICIENCIES SHALL BE CORRECTED PRIOR TO PAVING. THE TRACE WIRE SHOULD BE TESTED AND SUBMITTED AS A PACKAGE WITH THE TESTING PACKET.
20. WATER-SEWER SEPARATION SHALL BE PURSUANT TO AAC R-18-5-502C.
21. WATER MAINS SHALL BE SUBJECT TO A PRESSURE & LEAKAGE TEST IN ACCORDANCE WITH AWWA C-600 STANDARD.
22. WATER MAINS SHALL BE DISINFECTED IN ACCORDANCE WITH ADEQ ENGINEERING BULLETIN NO. 8 'DISINFECTION OF WATER SYSTEMS'.
23. OPERATION OF VALVES TO BE DONE BY CITY PERSONNEL ONLY.
24. DUCTILE IRON PIPE TO BE INSTALLED PER MANUFACTURER'S REQUIREMENTS. ALL MATERIALS USED IN THE INSTALLATION OF DUCTILE IRON PIPE SHALL BE PURSUANT TO AAC R-18-4.
25. ALL MATERIALS & PRODUCTS THAT COME INTO CONTACT WITH DRINKING WATER OR DRINKING WATER TREATMENT CHEMICALS MUST COMPLY WITH NSF STANDARD 61. ANY 'OR EQUAL' SUBSTITUTION SHALL ALSO MEET NSF STANDARD 61.
26. ALL TRENCHES & BEDDING SHALL BE PER COP DETAIL 200P & TECHNICAL SPECIFICATIONS.
27. ALL MATERIALS USED IN THE INSTALLATION OF WATER MAINS SHALL BE PURSUANT TO AAC R-18-4 & SHALL BE NSF APPROVED FOR POTABLE WATER.
28. ALL REVISIONS TO ORIGINAL PLANS MUST BE APPROVED BY THE PUBLIC WORKS DIRECTOR PRIOR TO CONSTRUCTION.
29. ALL DUCTILE IRON, COPPER, & BRASS FITTINGS SHALL BE ENCASED IN POLYETHYLENE PROTECTIVE WRAPPING IN ACCORDANCE WITH MAG SECTION 610.5 UNLESS COUNTERINDICATED BY GEOTECHNICAL CORROSIVITY TESTING OF BEDDING AND SHADING MATERIALS & APPROVED BY THE PUBLIC WORKS DIRECTOR.
30. WATER LINES SHALL BE INSTALLED WITH MECHANICAL RESTRAINTS WHERE JOINT RESTRAINTS IS REQUIRED.
31. WATER SERVICE INTERRUPTION NOTICES SHALL BE GIVEN TO AFFECTED RESIDENTS BY THE CONTRACTOR AT HIS EXPENSE. ADVANCE NOTIFICATION REQUIREMENTS MUST BE APPROVED BY THE PUBLIC WORKS DIRECTOR PRIOR TO SCHEDULING A SHUTDOWN.
32. WATER MAIN TAPS, SERVICE TAPS, SHUTDOWN REQUESTS, AND METER REQUESTS MUST BE INITIATED WITH THE CITY INSPECTOR A MINIMUM OF 5 WORKING DAYS IN ADVANCE.

COP STANDARD DETAIL	WATER PLAN GENERAL NOTES	CITY ENGINEER	REVISED: 05/15	DETAIL No. 103P

1. ALL WORK SHALL CONFORM TO MARICOPA ASSOCIATION OF GOVERNMENTS (MAG), & CITY OF PRESCOTT (COP) CONSTRUCTION STANDARDS & SPECIFICATIONS, WHICH ARE ON FILE IN THE OFFICE OF THE CITY ENGINEER.
2. ALL EXISTING FRAMES, COVERS, VALVE BOXES, & MANHOLES SHALL BE EITHER REPLACED OR ADJUSTED TO FINISH GRADE DEPENDING ON PLAN CALL OUT UPON COMPLETION OF PAVING, UTILITY, OR RELATED CONSTRUCTION.
3. ANY QUANTITIES SHOWN ON PLANS ARE NOT VERIFIED BY THE PUBLIC WORKS UTILITIES DIRECTOR.
4. ACCEPTANCE OF THE COMPLETED WORK WILL NOT BE GIVEN UNTIL 3 MIL MYLAR & CAD FORMAT DIGITAL 'AS-BUILT' PLANS ON CITY OF PRESCOTT SURVEY DATUM & COORDINATES HAVE BEEN SUBMITTED & SEALED BY A REGISTERED PROFESSIONAL ENGINEER AND APPROVED BY THE PUBLIC WORKS DEPARTMENT.
5. CITY OF PRESCOTT PUBLIC WORKS UTILITIES SHALL BE NOTIFIED A MINIMUM OF 24 HOURS PRIOR TO THE START OF ANY WORK.
6. ALL WORK & MATERIALS WHICH DO NOT CONFORM TO THE SPECIFICATIONS ARE SUBJECT TO REMOVAL & REPLACEMENT AT THE CONTRACTOR'S EXPENSE.
7. ANY WORK PERFORMED WITHOUT THE KNOWLEDGE OF THE CITY INSPECTOR OR HIS REPRESENTATIVE IS SUBJECT TO REMOVAL & REPLACEMENT AT THE CONTRACTOR'S EXPENSE.
8. THE CONTRACTOR SHALL PROVIDE SUFFICIENT MEN, EQUIPMENT, & MATERIAL ON THE JOB AT ALL TIMES DURING CONSTRUCTION TO COMPLY WITH SPECIFICATIONS & TO COMPLETE THE WORK.
9. CIP INSPECTION TO BE DONE BY THE CITY OF PRESCOTT PUBLIC WORKS DEPARTMENT OR THEIR REPRESENTATIVE. PRIVATE DEVELOPMENTS SHALL PROVIDE FOR INDEPENDENT 3RD PARTY INSPECTIONS.
10. CONTRACTOR TO NOTIFY PROJECT ENGINEER 72 HOURS (3 WORKING DAYS) IN ADVANCE OF CONSTRUCTION TO SCHEDULE CONSTRUCTION CONTROL STAKING.
11. THE CONTRACTOR IS TO UNCOVER ALL EXISTING LINES BEING TIED INTO AND VERIFY GRADES, MATERIAL, SIZE & ELEVATIONS BEFORE COMMENCING CONSTRUCTION & ORDERING MATERIALS.
12. IT IS THE CONTRACTOR'S RESPONSIBILITY TO LOCATE ALL UNDERGROUND PIPELINES, TELEPHONE & ELECTRICAL CONDUITS & STRUCTURES IN ADVANCE OF ANY CONSTRUCTION & OBSERVE ALL POSSIBLE PRECAUTIONS TO AVOID ANY DAMAGE TO SUCH. THE ENGINEER &/OR OWNER WILL NOT GUARANTEE ANY LOCATIONS AS SHOWN ON THESE PLANS, OR THOSE OMITTED FROM SAME.
13. CONTRACTOR SHALL NOTIFY 'BLUE STAKE' AT 1-800-STAKEIT (1-800-782-5348) AT LEAST 48 HOURS PRIOR TO CONSTRUCTION.
14. CONTRACTOR SHALL VERIFY ALL QUANTITIES SHOWN & MAKE HIS BID BASED UPON THOSE VERIFICATIONS. IF ANY DISCREPANCY IN QUANTITIES IS FOUND, THE CONTRACTOR SHALL NOTIFY THE ENGINEER AS SUCH.
15. ARIZONA DEPARTMENT OF ENVIRONMENTAL QUALITY REQUIREMENTS MUST BE COMPLIED WITH.
16. ARIZONA DEPARTMENT OF ENVIRONMENTAL QUALITY REQUIREMENTS SHALL APPLY WHEN MORE STRINGENT THAN THE MAG OR CITY OF PRESCOTT STANDARD SPECIFICATIONS FOR PUBLIC WORKS CONSTRUCTION; MORE SPECIFICALLY WHERE THEY PERTAIN TO MAXIMUM ALLOWABLE SEWER LINE/PRESSURE SEWER LINE EXFILTRATION-INFILTRATION RATES.
17. ALL PLANS SIGNED BY THE CITY ARE NULL & VOID ONE YEAR FROM DATE OF SIGNATURE IF CONSTRUCTION HAS NOT STARTED AND/OR IS NOT ACTIVELY PROGRESSING.
18. PROJECT CONTRACTOR SHALL BE RESPONSIBLE FOR SUBMITTING TRAFFIC CONTROL PLANS WHICH SHALL BE MADE A PART OF THE PLAN REVIEW REQUEST TO THE CITY ENGINEER FOR APPROVAL.
19. WATER-SEWER SEPARATION SHALL BE PURSUANT TO AAC R-18-5-502C.
20. ALL TRENCHES & BEDDING SHALL BE PER COP DETAIL 200P & TECHNICAL SPECIFICATIONS.
21. ALL REVISIONS TO ORIGINAL PLANS MUST BE APPROVED BY THE PUBLIC WORKS DIRECTOR PRIOR TO CONSTRUCTION. ANY UNAPPROVED REVISIONS ARE SUBJECT TO REMOVAL & REPLACEMENT AT CONTRACTOR'S EXPENSE.
22. SEWER FORCE MAIN LINES SHALL BE DESIGNED AND CONSTRUCTED OF A MATERIAL SUITABLE FOR SANITARY SEWER PRESSURE PIPE AS APPROVED BY THE CITY ENGINEER. SEWER LINES SHALL BE PRESSURE TESTED TO A MINIMUM OF 50 PSI ABOVE DESIGN WORKING PRESSURE AT THE LOWEST POINT IN THE SYSTEM FOR A MINIMUM OF 4 HOURS IN ACCORDANCE WITH AAC R18-9.
23. SEWER LINE LOW PRESSURE AIR TESTS SHALL BE DONE ON 100% OF ALL LINES AFTER PLACEMENT OF BACKFILL TO PAVEMENT SUBGRADE. TEST EACH SEGMENT OF THE SEWER LINE FOR LEAKAGE USING THE APPLICABLE METHOD BELOW AND RECORD THE RESULTS:
    - 23A. "STANDARD TEST METHOD FOR INSTALLATION OF ACCEPTANCE OF PLASTIC GRAVITY SEWER LINES USING LOW-PRESSURE AIR, F1417-92(1998)" PUBLISHED BY THE AMERICAN SOCIETY FOR TESTING AND MATERIALS.
24. SEWER MANHOLES EXFILTRATION TESTS SHALL BE DONE ON 100% OF ALL MANHOLES. VACUUM TESTING IN ACCORDANCE WITH CITY STANDARDS MAY BE USED IN LIEU OF EXFILTRATION TEST. THE CONTRACTOR SHALL TEST EACH MANHOLE USING ONE OF THE FOLLOWING TEST PROTOCOLS:
    - 24A. WATERTIGHTNESS TESTING BY FILLING THE MANHOLE WITH WATER. THE CONTRACTOR SHALL ENSURE THAT THE DROP IN WATER LEVEL FOLLOWING PRESOAKING DOES NOT EXCEED 0.00034 OF THE TOTAL MANHOLE VOLUME PER HOUR.
    - 24B. NEGATIVE AIR PRESSURE TESTING USING THE "STANDARD TEST METHOD FOR CONCRETE SEWER MANHOLES BY NEGATIVE AIR PRESSURE" (VACUUM) TEST, C1244-02e1(2002), PUBLISHED BY THE AMERICAN SOCIETY FOR TESTING AND MATERIALS. THIS MATERIAL IS INCORPORATED BY REFERENCE & DOES NOT INCLUDE ANY LATER AMENDMENTS OR EDITIONS OF THE INCORPORATED MATERIAL, & MAY BE VIEWED AT THE ARIZONA DEPARTMENT OF ENVIRONMENTAL QUALITY, 1110 W. WASHINGTON, PHOENIX, AZ. 85007, OR OBTAINED FROM THE AMERICAN SOCIETY FOR TESTING & MATERIALS INTERNATIONAL, 100 BAR HARBOR DRIVE, WEST CONSHOHOCKEN, PA. 19428-2959.
25. SEWER LINE DEFLECTION TESTS WITH AN APPROPRIATELY SIZED MANDREL SHALL BE DONE ON 100% OF ALL NON-RIGID PIPE LINES.
26. THE CONTRACTOR SHALL PERFORM A VISUAL INSPECTION OF ALL SEWER MAINS AND LATERALS INSTALLED WITHIN THE CITY'S COLLECTION SYSTEM UTILIZING A SEWER CCTV SYSTEM AFTER COMPLETE BACKFILL AND COMPACTION BUT BEFORE INSTALLING ANY PORTION OF THE PAVEMENT STRUCTURAL SECTION. THE INSPECTION SHALL COMPLY WITH THE CITY'S VIDEO ACCEPTANCE PROCEDURE. THE CONTRACTOR SHALL PROVIDE 72 HOURS ADVANCE NOTICE FOR CITY STAFF TO BE PRESENT DURING THE VIDEO OPERATION AND SHALL PROVIDE THE CITY A VIDEO DVD AND HARD COPY OF THE INSPECTION REPORT UPON COMPLETION.
27. COVER EACH SEWER LINE WITH AT LEAST 3 FEET OF EARTH COVER MEETING THE REQUIREMENTS "TRENCH EXCAVATION, BACKFILLING, & COMPACTION" (SECTION 601) REVISED 2004, PUBLISHED BY THE MARICOPA ASSOCIATION OF GOVERNMENTS; & "RIGID PIPE BEDDING FOR SANITARY SEWERS" (WWM 104) REVISED JULY 2002, PUBLISHED BY PIMA COUNTY WASTEWATER MANAGEMENT.
28. PRESSURE SEWER MAINS AND SERVICE LATERALS (LPS) SHALL BE SUBJECT TO A PRESSURE & LEAKAGE TEST IN ACCORDANCE WITH AWWA-C-600 STANDARD. TEST PRESSURE SHALL BE A MINIMUM OF 100 PSI, OR 50 PSI OVER WORKING PRESSURE, WHICHEVER IS GREATER. TESTING SHALL BE DONE AFTER BACKFILL TO SUBGRADE.

COP STANDARD DETAIL	WASTEWATER PLAN GENERAL NOTES	CITY ENGINEER	REVISED: 05/15	DETAIL No. 104P

1. ALL GRADING SHALL CONFORM TO THE CURRENT CITY ADOPTED EDITION OF THE INTERNATIONAL BUILDING CODE, AND CITY OF PRESCOTT LAND DEVELOPMENT CODE (REFERENCE CITY OF PRESCOTT STANDARD SECTIONS).

2. ALL PROVISIONS OF THE PRELIMINARY SOILS REPORT PREPARED BY _____, DATED _____ SHALL BE COMPLIED WITH DURING OPERATIONS.

3. THIS PLAN IS FOR GRADING PURPOSES ONLY. APPROVAL OF THIS PLAN DOES NOT CONSTITUTE APPROVAL OF DRIVEWAY LOCATIONS OR SIZES, PARKING LOT LAYOUT, SEWER AND WATER FACILITIES, BUILDING LOCATIONS, OFF-SITE DRAINAGE FACILITIES OR OTHER ITEMS NOT RELATED DIRECTLY TO THE BASIC GRADING OPERATION.

4. CERTIFICATION FROM THE REGISTERED CIVIL ENGINEER AND SOILS/GEOLOGICAL ENGINEER STATING THAT THE ROUGH GRADING HAS BEEN COMPLETED PER THE APPROVED PLAN, AND A COMPACTION REPORT FROM THE SOILS ENGINEER ON ANY FILL AREAS THAT ARE REQUIRED SHALL BE PROVIDED PRIOR TO BUILDING PERMITS BEING ISSUED.

5. PARTIES NAMED ON ADEQ'S NOTICE OF INTENT (N.O.I.) ARE RESPONSIBLE FOR EROSION, DUST, MUD, SILT, DEBRIS, AND TEMPORARY DRAINAGE CONTROL DURING GRADING OPERATIONS AND MAY BE REQUIRED TO PROVIDE A SWPPP.

6. ANY ON-SITE RETAINING WALLS WILL REQUIRE APPROVAL AS PART OF THESE PLANS. ANY NECESSARY RETAINING WALLS ON THE PERIMETER OF THIS SITE MAY BE REQUIRED TO BE IN PLACE AND APPROVED BY THE CITY BUILDING DEPARTMENT PRIOR TO THE START OF GRADING. A SEPARATE PLAN WITH REQUIRED STRUCTURAL CALCULATIONS MAY BE REQUESTED FOR RETAINING WALLS.

7. ANY INFRASTRUCTURE CONSTRUCTED IN THE PUBLIC RIGHT OF WAY WILL REQUIRE SEPARATE PLAN APPROVAL AND INSPECTION FROM THE CITY ENGINEER.

8. ANY WALLS, FENCES, STRUCTURES AND/OR APPURTENANCES ADJACENT TO THIS PROJECT SHALL BE PROTECTED IN PLACE. IF GRADING OPERATIONS DAMAGE OR ADVERSELY AFFECT SAID ITEMS IN ANY WAY, THE CONTRACTOR AND/OR DEVELOPER IS RESPONSIBLE FOR WORKING OUT AN ACCEPTABLE SOLUTION TO THE SATISFACTION OF THE AFFECTED PROPERTY OWNER(S).

9. THE CONTRACTOR/DEVELOPER IS RESPONSIBLE FOR ENSURING THAT RETAINING WALLS DO NOT INTERFERE WITH PROVISION OF UTILITIES. WALLS MUST BE CONSTRUCTED ON SITE AND OUTSIDE OF THE RIGHT OF WAY. THIS SHALL INCLUDE THE FOOTINGS.

10. IT IS THE CONTRACTOR'S RESPONSIBILITY TO ENSURE THAT COMPACTION HAS BEEN ATTAINED ON THE ENTIRE GRADING SITE IN ACCORDANCE WITH THE GENERAL ENGINEERING PLAN, INCLUDING FILL AREAS OUTSIDE THE BUILDING PADS AND ON ALL FILL SLOPES, AND SHALL BE CERTIFIED BY THE SOIL'S ENGINEER.

11. CITY APPROVAL OF PLANS DOES NOT RELIEVE THE DEVELOPER FROM THE RESPONSIBILITY FOR CORRECTION OR ERROR OR OMISSION DISCOVERED DURING CONSTRUCTION. UPON REQUEST, THE REQUIRED PLAN REVISIONS SHALL BE PROMPTLY SUBMITTED TO THE CITY ENGINEER FOR APPROVAL.

12. IT SHALL BE THE CONTRACTOR'S RESPONSIBILITY TO CALL THE CITY ENGINEER'S OFFICE AT (928) 777-1140 FOR ANY REQUIRED CIVIL INSPECTION 24 HOURS PRIOR TO PERFORMING ANY WORK. WORK PERFORMED WITHOUT CALLING FOR INSPECTION MAY BE REJECTED AND, IF REJECTED, SHALL BE REMOVED SOLELY AT THE CONTRACTOR'S EXPENSE.

13. NO GRADING SHALL COMMENCE WITHOUT OBTAINING A GRADING PERMIT AND NOTIFYING THE CITY OF PRESCOTT OR DEVELOPER'S GRADING INSPECTOR TO SCHEDULE A PREGRADING MEETING TWO WORKING DAYS PRIOR TO THE START OF WORK.

14. PRIOR TO THE START OF GRADING ALL SWPPP MEASURES SHALL BE IN PLACE, ALL DEBRIS, INCLUDING EXISTING STRUCTURES, FOOTINGS, FOUNDATIONS AND RUBBLE SHALL BE REMOVED FROM THE SITE TO THE SATISFACTION OF THE SOILS ENGINEER.

15. AFTER REMOVAL OF DEBRIS, ANY EXISTING FILL OR DISTURBED NATURAL SOILS SHALL BE EXCAVATED TO THE SATISFACTION OF THE SOILS ENGINEER.

16. THE EXPOSED SOILS SHALL THEN BE INSPECTED BY THE SOILS ENGINEER, AND ANY ADDITIONAL OVER-EXCAVATION SHALL THEN BE MADE IN ACCORDANCE WITH THE SOILS ENGINEER'S RECOMMENDATIONS AND AS CONTAINED IN THE SOIL'S REPORT.

17. THE EXPOSED SOILS SHALL THEN BE SCARIFIED TO PROVIDE A BOND WITH NEW FILL, BROUGHT TO PROPER MOISTURE CONTENT AND COMPACTED TO AT LEAST 90% OF THE MAXIMUM DENSITY, AS DETERMINED BY ASTM D1557-78 OR EQUIVALENT COMPACTION SHALL BE OBTAINED BY METHODS SPECIFIED BY THE SOILS ENGINEER. ROAD PRISM SUBGRADE SHALL BE COMPACTED TO AT LEAST 95% STANDARD OR MODIFIED PER SOILS ENGINEER'S RECOMMENDATIONS.

18. THE SOILS AND DESIGN ENGINEER OF RECORD SHALL ALSO BE RESPONSIBLE TO INSPECT, VERIFY AND REPORT THAT PROPER COMPACTION HAS BEEN OBTAINED BY EARTHWORK CONTRACTOR OR SUBCONTRACTOR AND PRIVATE UTILITY FRANCHISES CONCERNING UTILITY LINE BACKFILL, TO INCLUDE ELECTRICAL, GAS, CABLE, FIBEROPTIC AND LANDSCAPE IRRIGATION LINES. ADDITIONALLY, WATER AND SEWER LINES TO BE BACKFILLED AND COMPACTED IN ACCORDANCE WITH GENERAL ENGINEERING REQUIREMENTS SECTION AND DETAIL.

19. AN AS-GRADED GRADING PLAN AND THE CERTIFICATION OF COMPLIANCE FORMS FOR SAID GRADING PLAN WITH THE PROPER STAMPS AND SIGNATURES ARE TO BE SUBMITTED TO THE CITY ENGINEER PRIOR TO RELEASE OF GRADING BOND AND PRIOR TO FINAL GRADING INSPECTION. BUILDING PAD CERTIFICATION SHALL BE SUBMITTED TO THE BUILDING DEPARTMENT WHEN REQUESTED.

20. NO FILL SHALL BE PLACED UNTIL STRIPPING OF VEGETATION, REMOVAL OF UNSUITABLE SOILS, AND INSTALLATION OF SUBDRAINS (IF ANY) HAVE BEEN INSPECTED AND APPROVED BY THE SOILS ENGINEER.

21. ENGINEER MUST SET GRADE STAKES FOR ALL DRAINAGE DEVICES AND OBTAIN INSPECTION BEFORE POURING.

22. GRADING SHALL NOT BE STARTED WITHOUT FIRST NOTIFYING CITY PUBLIC WORKS INSPECTION DEPARTMENT. A PRE-GRADING MEETING ON THE SITE IS REQUIRED BEFORE BEGINNING GRADING ACTIVITIES BY THE FOLLOWING PEOPLE PRESENT: OWNER, GRADING CONTRACTOR, DESIGN CIVIL ENGINEER, SOIL ENGINEER/GEOLOGIST, PUBLIC WORKS INSPECTOR, AND WHEN REQUIRED, THE ARCHAEOLOGIST AND PALEONTOLOGIST. THE REQUIRED INSPECTIONS FOR GRADING WILL BE EXPLAINED AT THE PRE-CONSTRUCTION MEETING.

23. ALL EXISTING FILLS SHALL BE APPROVED AND CERTIFIED BY THE SOILS ENGINEER OR REMOVED PRIOR TO PLACING ADDITIONAL FILLS.

24. ALL TRENCH BACKFILLS SHALL BE TESTED AND APPROVED BY THE SOIL ENGINEER.

25. THE COMPACTION REPORT AND APPROVAL FROM THE SOIL ENGINEER SHALL INDICATE THE TYPE OF FIELD TESTING PERFORMED. EACH TEST SHALL BE IDENTIFIED WITH THE METHOD OF OBTAINING THE IN-PLACE DENSITY, WHETHER SAND CONE OR NUCLEAR GAUGE, AND SHALL BE SO NOTED FOR EACH TEST.

26. EXPORT SOIL MUST BE TRANSPORTED TO A LEGAL DUMP OR TO A PERMITTED SITE SHOWN CLEARLY ON APPROVED PLANS.

27. ALL EXISTING DRAINAGE COURSES THROUGH THIS SITE SHALL REMAIN OPEN UNTIL FACILITIES TO HANDLE STORM WATER ARE APPROVED AND FUNCTIONAL; HOWEVER, IN ANY CASE, THE PERMITTEE SHALL BE HELD LIABLE FOR ANY DAMAGE DUE TO OBSTRUCTING NATURAL DRAINAGE PATTERNS.

COP STANDARD DETAIL	GRADING AND DRAINAGE NOTES	CITY ENGINEER	REVISED: 05/15	DETAIL No. 105P-1

1. A COPY OF THE APPROVED GRADING AND DRAINAGE PLAN FOR THIS PROJECT AND EROSION AND SEDIMENT CONTROL (ESC) PLAN OR STORM WATER POLLUTION PREVENTION PLAN (SWPPP) SHALL BE MAINTAINED ON THE SITE AND AVAILABLE FOR REVIEW. THOSE ELEMENTS OF THE GRADING AND DRAINAGE PLAN PERTINENT TO OR REFERENCED ON THE SWPPP SHALL BE CONSIDERED A PART OF THE SWPPP.

2. THE ESC/SWPPP AND RELATED RECORDS MUST BE MADE AVAILABLE UPON REQUEST TO ADEQ AND THE CITY OF PRESCOTT.

3. THE IMPLEMENTATION OF THESE PLANS AND THE CONSTRUCTION, MAINTENANCE, REPLACEMENT, AND UPGRADING OF THESE FACILITIES IS THE RESPONSIBILITY OF THE PERMITTEE/CONTRACTOR UNTIL ALL CONSTRUCTION IS APPROVED AND A NOTICE OF TERMINATION HAS BEEN SUBMITTED.

4. THE SCHEMATIC EROSION CONTROL MEASURES SHOWN ON THE PLANS ARE A MINIMUM. THE CONTRACTOR SHALL PROVIDE ALL NECESSARY MEANS TO PROTECT EXISTING FACILITIES AND ADJACENT PROPERTIES FROM NOISE, DUST, AND STORM WATER RUNOFF THROUGHOUT CONSTRUCTION OF THE PROJECT AND BUILDINGS ON LOTS, AND SHALL CONDUCT HIS OPERATIONS IN SUCH A MANNER THAT STORM WATER WILL BE CONTAINED ON SITE OR CHANNELED INTO A STORM DRAIN SYSTEM, PROVIDED THAT IT IS FREE FROM POLLUTANTS AND DEBRIS.

5. CONTRACTOR SHALL PERMANENTLY STABILIZE ALL DISTURBED SLOPES AS STATED ON APPROVED CONSTRUCTION PLANS. ALL EROSION CONTROL STRUCTURES SHALL REMAIN IN PLACE UNTIL EXPOSED SLOPES HAVE BEEN PERMANENTLY STABILIZED.

6. CONTRACTOR SHALL TAKE MEASURES TO PREVENT OR MINIMIZE THE GENERATION, EMISSION AND/OR TRANSPORT OF FUGITIVE DUST FROM CONSTRUCTION ACTIVITIES.

7. THIS PLAN SHALL BE IN EFFECT UNTIL ALL DISTURBED AREAS ARE PERMANENTLY STABILIZED, TRANSFERRED TO NEW OWNERSHIP, OR DEVELOPED UNDER FUTURE PLANS WITH A NEW NOTICE OF INTENT (NOI), SWPPP, AND PERMIT. ONCE THE CONSTRUCTION ACTIVITIES HAVE BEEN COMPLETED AND THE SITE HAS MET THE FINAL STABILIZATION REQUIREMENTS OF THE PERMIT, THE AUTHORIZED SITE REPRESENTATIVE MAY FILE A NOTICE OR TERMINATION (NOT) WITH ADEQ, WITH A COPY SUBMITTED TO THE CITY OF PRESCOTT ENGINEERING DIVISION TO TERMINATE COVERAGE UNDER THE PERMIT.

8. A CONCRETE WASHOUT SHALL BE INSTALLED FOR ALL PROJECTS THAT PROPOSE CONCRETE TO BE MIXED ON SITE OR BE DELIVERED FROM A BATCH PLANT. THE CONCRETE WASHOUT SHALL BE LOCATED A MINIMUM OF FIFTY (50) FEET FROM ANY DRAINAGE INFRASTRUCTURE OR NATURAL DRAINAGE FEATURES OR WATER BODIES AND INCORPORATE AN IMPERMEABLE LINER TO CONTAIN THE REQUIRED VOLUME. ALL DRIED CONCRETE WASTE SHALL BE BROKEN INTO MANAGEABLE PIECES AND DISPOSED OF OFF-SITE AT AN APPROVED FACILITY.

1. THE CONTRACTOR SHALL SPOT LAYOUT THE ENTIRE PROJECT AND CONTACT THE CITY INSPECTOR TO MAKE ARRANGEMENTS FOR INSPECTION PRIOR TO INSTALLING TRAFFIC SIGNS OR PAVEMENT MARKINGS. ANY SIGNING OR STRIPING INSTALLED BEFORE LAYOUT APPROVAL SHALL BE SUBJECT TO REMOVAL AND REINSTALLATION AT THE CONTRACTOR'S EXPENSE.
2. TRAFFIC SIGN DIMENSIONS, COLORS AND LETTERING SHALL CONFORM TO THE LATEST MUTCD SPECIFICATIONS. TRAFFIC SIGN SIZE SHALL BE STANDARD UNLESS OTHERWISE SPECIFIED ON THE PLANS.
3. SIGN LOCATION SHALL BE COORDINATED WITH LANDSCAPING PLANS TO ENSURE SIGN VISIBILITY PER AASHTO STANDARDS.
4. ALL R1-1 "STOP" SIGNS AND PEDESTRIAN WARNING SIGNS SHALL BE RETRO-REFLECTIVE WITH SHEETING MATERIAL TO BE DIAMOND VIP GRADE, MEETING OR EXCEEDING ASTM 4956-04.
5. ALL OTHER SIGNS ARE TO BE RETRO-REFLECTIVE WITH SHEETING MATERIAL TO BE HIGH INTENSITY PRISMATIC MEETING OR EXCEEDING ASTM 4956-04.
6. SIGN BLANKS SHALL BE 5052-H38 ALLOY TREATED ALUMINUM WITH ALODINE 1200 CONVERSION COATING, 0.080" THICK WITH ROUNDED CORNERS.
7. SIGNS SHALL BE MOUNTED ON STREET LIGHT POLES WHENEVER FEASIBLE.
8. STRIPING SHALL CONFORM TO THE MOST RECENT EDITION OF THE MUTCD WITH REGARD TO SIZE, COLOR, REFLECTIVITY AND PLACEMENT UNLESS OTHERWISE SPECIFIED ON THE PLANS.
9. ALL THERMOPLASTIC APPLICATIONS SHALL CONFORM TO ADOT SPECIFICATION 704. TRANSVERSE MARKINGS, SYMBOLS AND LEGENDS SHALL BE 90 MIL (0.090 INCH) THICK, LONGITUDINAL MARKINGS SHALL BE 60 MIL (0.060 INCH) THICK ALKYD EXTRUDED THERMOPLASTIC.
10. ALL PAINT APPLICATION SHALL CONFORM TO ADOT SPECIFICATION 708.
11. ALL CONFLICTING STRIPING, PAVEMENT MARKINGS, AND CURB PAINT SHALL BE REMOVED BY WET SANDBLASTING OR OTHER APPROVED METHOD PRIOR TO THE INSTALLATION OF NEW STRIPING. SLURRY OR PAINT SHALL NOT BE USED TO COVER EXISTING PAINT. PAVEMENT THAT IS DAMAGED DUE TO THE REMOVAL OF MAKERS OR STRIPING SHALL BE REPAIRED TO THE SATISFACTION OF THE CITY ENGINEER OR HIS DESIGNEE.

1. ALL MATERIAL, EQUIPMENT AND INSTALLATION SHALL CONFORM TO THE LATEST MUTCD SPECIFICATIONS; THE ADOT TRAFFIC SIGNAL AND LIGHTING STANDARD DRAWINGS, ADOT STANDARD SPECIFICATIONS FOR ROAD AND BRIDGE CONSTRUCTION, AND THE CITY OF PRESCOTT STANDARD DETAILS.
2. ALL EQUIPMENT SHALL BE APPROVED BY THE CITY OF PRESCOTT THROUGH THE ELECTRICAL EQUIPMENT SUBMITTAL PROCESS PRIOR TO THE ORDERING OF EQUIPMENT.
3. THE LOCATION OF EACH NEW POLE FOUNDATION, PULLBOX, CONTROLLER CABINET FOUNDATION, UPS CABINET FOUNDATION AND ELECTRICAL SERVICES PEDESTAL FOUNDATION SHALL BE MARKED IN THE FIELD AS SHOWN ON THE PLANS. THE EXACT LOCATION SHALL BE APPROVED BY THE CITY TRAFFIC ENGINEER AND/OR APPROVED CITY REPRESENTATIVE BY CONTACTING (928)777–1130 PRIOR TO WORK.
4. ALL VEHICLE AND PEDESTRIAN COUNTDOWN INDICATIONS SHALL BE LED.
5. PEDESTRIAN COUNTDOWN HEADS SHALL BE PROVIDED AT ALL VEHICULAR SIGNAL LOCATIONS WHENEVER SIDEWALK CONNECTIONS EXIST OR ARE INSTALLED.
6. ALL PEDESTRIAN PUSH BUTTON ASSEMBLIES SHALL CONFORM TO ADOT STANDARD DRAWINGS TS11–1 EXCEPT THAT THE PUSH BUTTON SHALL BE A MINIMUM OF TWO INCH IN DIAMETER. PUSH BUTTONS MUST MEET ADA REQUIREMENTS AND BE MOUNTED AT ADA HEIGHTS. ACCESSIBLE PEDESTRIAN SIGNAL SYSTEMS SHALL BE REQUIRED WHEN DIRECTED BY THE CITY TRAFFIC ENGINEER AND/OR APPROVED CITY REPRESENTATIVE.
7. CONTROLLER CABINET SHALL BE TYPE IV ECONOLITE TS2, TYPE 1 WITH ELEVATOR BASE. PROVISION FOR BATTERY BACK–UP SHALL BE PROVIDED IN ALL TRAFFIC SIGNAL CABINETS.
8. METER PEDESTAL CABINET SHALL BE MYERS PBM 2000 OR 1250 UPS W/FOUNDATION OR APPROVED EQUAL.
9. TRAFFIC SIGNAL PULL BOXES SHALL BE NO. 7 OR NO. 5 AS CALLED FOR ON THE PLANS AND CONFORM TO THE TS 1–4, 1–5 AND 1–5 OF THE ADOT TRAFFIC SIGNALS AND LIGHTING STANDARD DRAWINGS. BOX LIDS SHALL BE LOCKING AND LABELED WITH "TRAFFIC SIGNAL" UNLESS OTHERWISE SPECIFIED BY THE CITY TRAFFIC ENGINEER AND/OR THE APPROVED CITY REPRESENTATIVE
10. ALL CONDUITS SHALL BE SCHEDULE 40 PVC, OF A DIAMETER AS CALLED FOR ON THE APPROVED PLANS.
11. LOOP DETECTOR SHALL BE SIX (6') FEET BY FIFTY (50') FEET QUADRUPOLE UNLESS OTHERWISE SPECIFIED BY THE CITY TRAFFIC ENGINEER AND/OR THE APPROVED CITY REPRESENTATIVE. ALL VEHICLE DETECTION LOOP CABLES SHALL BE #14 AWG IMSA 51–5–1985 CABLE. LEAD–IN CABLES SHALL BE #14 AWG IMSA 50–2–1984 CABLE. NO SPLICE SHALL BE ALLOWED IN THE DETECTION LOOP CABLE EXCEPT AT THE PULLBOX ADJACENT TO THE LOOP. THE DETECTOR LEAD–IN SHALL NOT BE SPLICED.
12. THE TOP OF THE POLE FOUNDATION SHALL BE LEVEL WITH THE FINISHED GRADE. IF THE SLOPE OR SHOULDER DROPS OFF FROM FINISHED GRADE, THE CONTRACTOR SHALL GRADE AROUND THE POLE FOUNDATION. THE TOP OF THE FOUNDATION SHALL EXTEND NO MORE THAN 4 INCHES ABOVE THE ADJACENT ULTIMATE GRADE.
13. ALL CONCRETE USED FOR TRAFFIC SIGNAL POLE AND CABINET FOUNDATIONS SHALL BE CLASS "A".
14. THE CONTRACTOR SHALL CONTACT THE CITY TRAFFIC ENGINEER AND/OR THE APPROVED CITY REPRESENTATIVE TO ARRANGE FOR METER AND ELECTRICAL SERVICE CONNECTION FROM ARIZONA PUBLIC SERVICE (APS). THE CONTRACTOR IS RESPONSIBLE FOR PROVIDING AND INSTALLING THE SERVICE CONDUIT RUN FROM THE POWER COMPANY SOURCE TO THE SIGNAL METER PEDESTAL.
15. EMERGENCY VEHICLE PREEMPTION SHALL BE INSTALLED AT ALL TRAFFIC SIGNAL INTERSECTIONS. THE CONTRACTOR SHALL PROVIDE AND INSTALL AN OPTICOM 700 SERIES SYSTEM OR APPROVED EQUAL TO INCLUDE, SENSORS, PROCESSORS, CONFIRMATION AND CONTROLLER HARDWARE, MOUNTING HARDWARE, INTERFACE CABLES, OPTICAL CABLES, AND ANY OTHER EQUIPMENT REQUIRED FOR A FULLY FUNCTIONING PRE–EMPTION SYSTEM.
16. CONTRACTOR SHALL PERFORM A GROUND RESISTANCE TEST FOR EACH INSTALLED GROUND ROD AND POLE FOUNDATION GROUNDING COIL IN ACCORDANCE WITH ADOT SPEC. 723–3.03.
17. CONTRACTOR SHALL BAG ALL NEWLY INSTALLED VEHICULAR AND/OR PEDESTRIAN TRAFFIC SIGNAL HEADS WITH BURLAP OR OTHER APPROVED MATERIAL UNTIL FINAL INSPECTION AND ACCEPTANCE BY THE CITY TRAFFIC ENGINEER AND/OR THE APPROVED CITY REPRESENTATIVE.
18. CONTRACTOR SHALL REPLACE ALL LANDSCAPING AND/OR IRRIGATION FACILITIES THAT MAY BE DISTURBED OR DAMAGED DURING TRAFFIC SIGNAL CONSTRUCTION AT HIS EXPENSE CONTACT THE PROPERTY OWNER FOR INFORMATION ON THE LOCATION OF IRRIGATION EQUIPMENT.
19. CONTRACTOR SHALL PROVIDE AND INSTALL "TRAFFIC CONTROL CHANGE" SIGNS WITH FLAGS FOR 30 DAYS FOLLOWING TURN–ON.
20. CONTRACTOR SHALL RETURN ALL REMOVED/UNUSED TRAFFIC SIGNAL EQUIPMENT TO THE CITY OF PRESCOTT PUBLIC WORKS DEPARTMENT. FOR ADDITIONAL INFORMATION, PLEASE CONTACT THE TRAFFIC SIGNAL SUPERVISOR AT (928)777–1683
21. CONTRACTOR SHALL PROVIDE A SIX–FOOT COILED CONTROL CORD IN THE POLICE PANEL OF THE CONTROLLER CABINET.

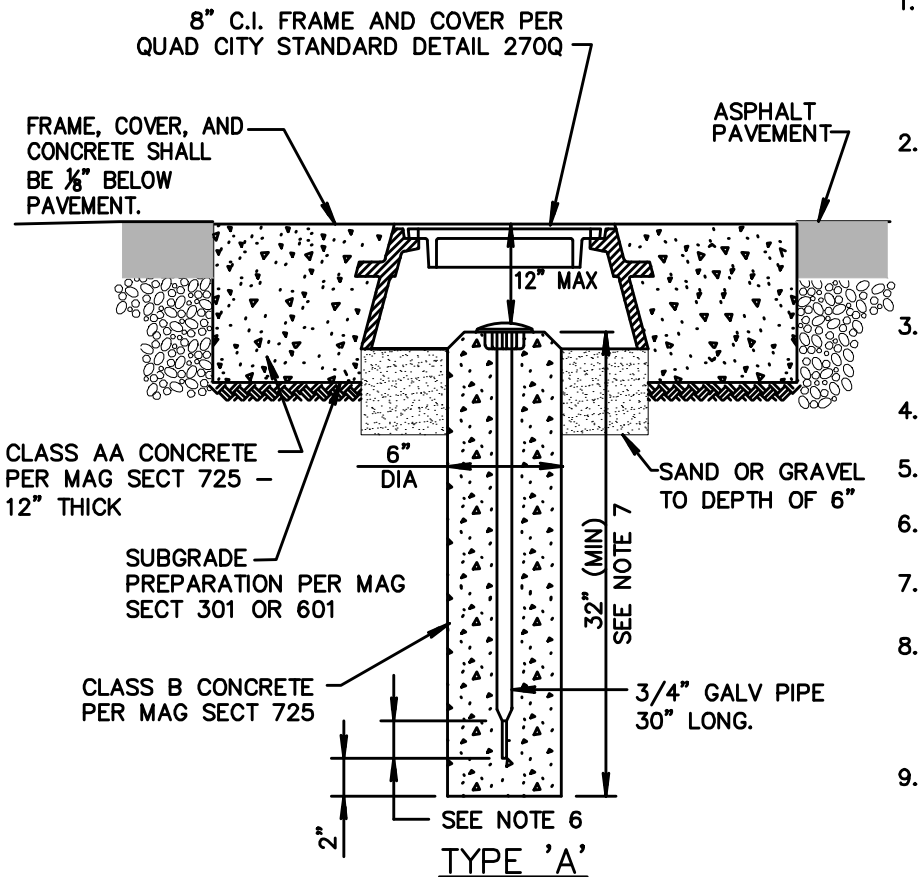

TYPE 'A'
(WITH FRAME)

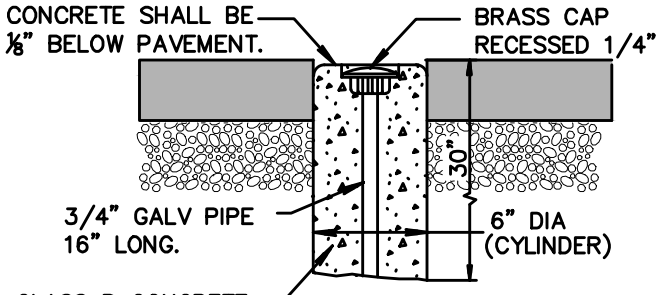

TYPE 'B'
(WITHOUT FRAME)

NOTES:

1. TYPE "A" TO BE USED AT INTERSECTION OF STREET CENTERLINES; SECTION AND ALIQUOT SECTION CORNERS; ANGLE POINTS; PC'S AND PT'S OF CURVES; LYING WITHIN ARTERIAL AND COLLECTOR STREETS.
2. TYPE "B" TO BE USED AT INTERSECTION OF STREET CENTERLINES; SECTION AND ALIQUOT SECTION CORNERS; ANGLE POINTS; PC'S AND PT'S OF CURVES; SUBDIVISION CORNERS & CHANGES IN ALIGNMENT OF SUBDIVISION BOUNDARIES; LYING WITHIN STREETS NOT DESIGNATED ARTERIAL OR COLLECTOR.
3. TYPE "C" TO BE USED AT CORNERS OF AND CHANGES IN ALIGNMENT OF SUBDIVISION BOUNDARIES; LYING IN UNPAVED AREAS.
4. CAP TO BE CONSTRUCTED OF RED BRASS OR BRONZE.
5. LETTERS TO BE APPROX. 1/32" WIDE & 1/32" DEEP.
6. FLATTENING THE BOTTOM 2" OF THE GALVANIZED PIPE IS OPTIONAL.
7. TOP OF CONCRETE POST IS CHAMFERED 3/4" EXCEPT WHEN SET FLUSH WITH PAVEMENT.
8. THE CAP SHALL SHOW THE POINT SURVEYED BY A PUNCH MARK OR SCRIBED CROSS AND THE CAP SHALL BE STAMPED WITH THE YEAR AND THE REGISTERED LAND SURVEYOR'S (RLS) REGISTRATION NUMBER.
9. WHEN APPLICABLE, THE CAP SHALL BE STAMPED WITH THE APPROPRIATE PUBLIC LAND SURVEY SYSTEM MARKING PER CURRENT MANUAL OF INSTRUCTIONS FOR THE SURVEY OF PUBLIC LANDS OF THE UNITED STATES, PREPARED BY THE BUREAU OF LAND MANAGEMENT.
10. SUBMIT TO THE AGENCY SURVEYOR A COPY OF THE RECORDED CORNER RECORD OR RESULTS OF SURVEY TO DOCUMENT COMPLIANCE WITH THE ARIZONA BOARD OF TECHNICAL REGISTRATION REQUIREMENTS.
11. THE MAXIMUM DISTANCE FROM TOP OF COVER TO TOP OF BRASS CAP SHALL NOT EXCEED 12 INCHES. SUBSEQUENT PAVEMENT LIFTS OR STREET CONSTRUCTION THAT CAUSES THIS DISTANCE TO BE EXCEEDED SHALL CAUSE THE STREET MONUMENT TO BE RECONSTRUCTED.
12. AT THE TIME OF CONSTRUCTION, THE BRASS CAP SHALL BE PLACED 6" BELOW THE COVER.

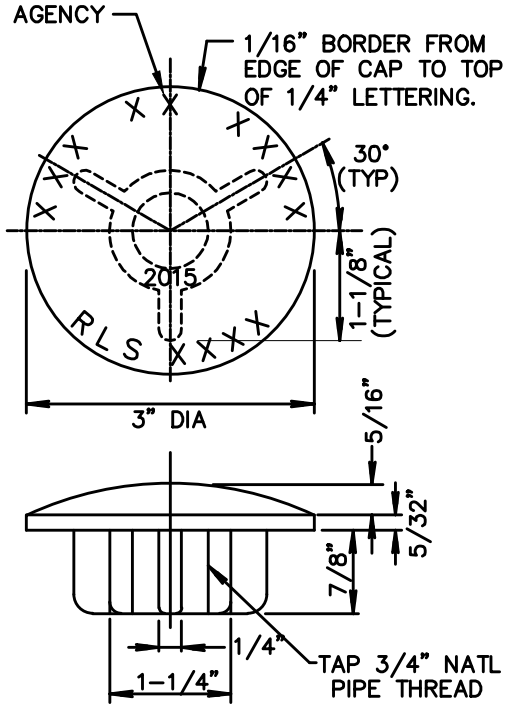

CAP DETAIL

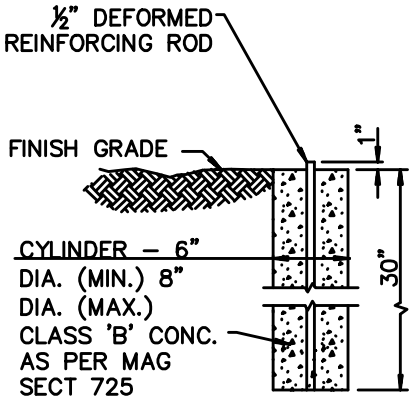

TYPE 'C'

QUAD CITY STANDARD DETAIL	SURVEY MARKER	REVISED: 3/16	DETAIL No. 120Q

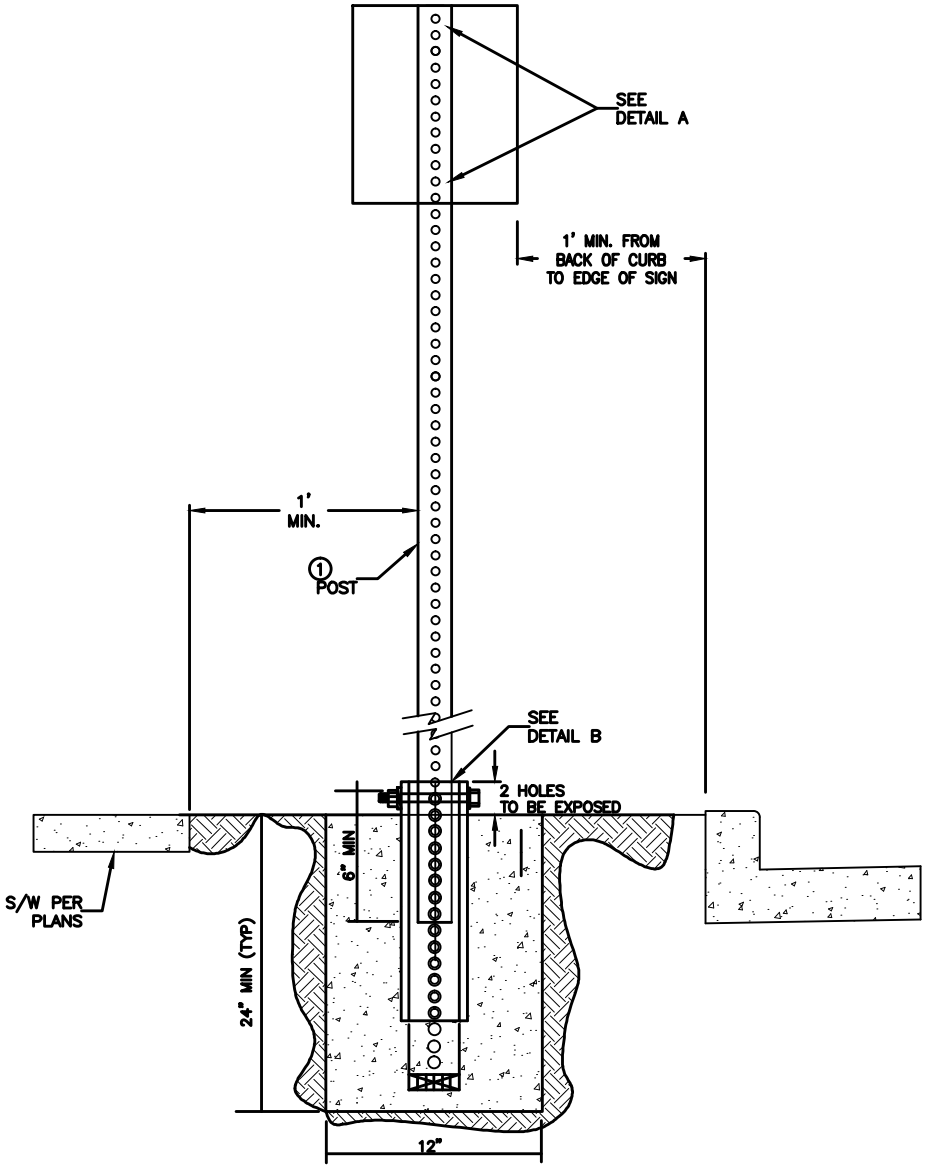

CONCRETE BASE

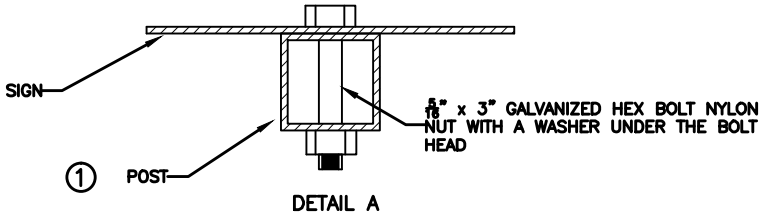

DETAIL A
SIGN MOUNTING

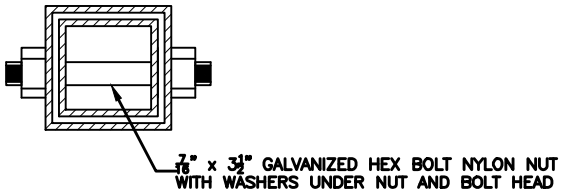

DETAIL B
ANCHOR ASSEMBLY

NOTES:

1. INSTALL ALL TRAFFIC SIGNS ON 12 GAUGE 2" SQUARE STEEL TUBING.
2. CONCRETE BASE 2' DEEP MIN. x 12" WIDE, 18" LONG ANCHOR & 12" SLEEVE COMPLETELY TAPED TO PREVENT SEEPAGE OF CONCRETE.
3. POST ANCHOR SHALL HAVE 2 HOLES EXPOSED AT FINISHED GRADE.
4. ALL TRAFFIC SIGNS, WITH THE EXCEPTION OF R6-1 & DELINEATORS, SHALL BE SET AT A HEIGHT OF 7' TO BOTTOM OF SIGN. POSTS WITH DUAL SIGN ASSEMBLIES SHALL BE SET AT A HEIGHT OF 6' TO BOTTOM OF SIGN. DELINEATORS SHALL BE MOUNTED AT A MINIMUM OF 4' TO THE BOTTOM OF THE SIGN. ALTERNATE HEIGHTS MUST BE APPROVED BY THE TRAFFIC ENGINEER PRIOR TO INSTALLATION.
5. BOLT FOR THE BASE TO BE PERPENDICULAR TO THE FLOW OF TRAFFIC.

QUAD CITY STANDARD DETAIL	SIGN POST INSTALLATION	REVISED: 3/16	DETAIL No. 131Q

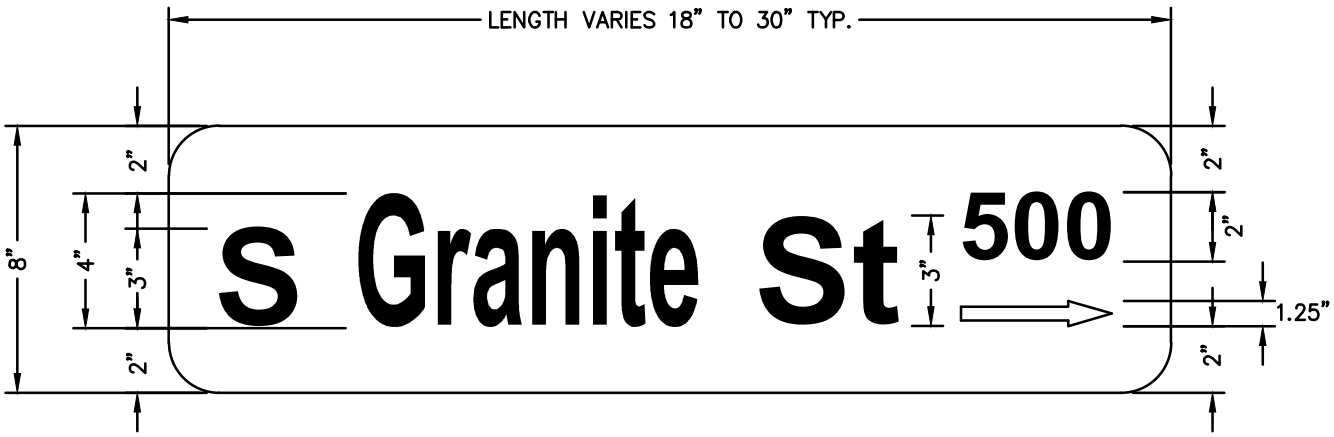

NOTES:

1. ALL REFLECTIVE SHEETING MATERIAL(S) SHALL BE HIGH INTENSITY PRISMATIC.
2. ALL TRANSPARENT ACRYLIC, PRESSURE-SENSITIVE FILM SHALL BE 3M #177 GREEN ELECTRO CUT FILM OR APPROVED EQUAL.
3. LETTER FONT SHALL BE UPPERCASE AND LOWERCASE FONT HWY C OR SIMILAR.
4. SEE DETAIL "A" FOR 8" STREET SIGN BLANK DIMENSIONS.
5. THESE SIGNS ARE CONSTRUCTED BY APPLYING WHITE HIP SHEETING TO THE ENTIRE BLANK. ON TOP OF THIS SHEETING A GREEN TRANSLUCENT PRESSURE-SENSITIVE FILM FROM WHICH THE LEGEND HAS BEEN CUT AND REMOVED IS APPLIED. THUS THE GREEN BACKGROUND IS APPLIED ON TOP OF THE WHITE SHEETING RESULTING IN A SIGN WITH A WHITE LEGEND AND A GREEN BACKGROUND.
6. SIGN BLANKS SHALL BE 5052-H38 ALLOY TREATED ALUMINUM WITH ALODINE 1200 CONVERSION COATING.
7. SIGN BLANK SHALL BE 0.100" THICK WITH ROUNDED CORNERS AS NOTED.
8. BLOCK NUMBERS ARE IN INCREMENTS OF 100 GOING UP IN NUMERICAL VALUE.
9. SIGNS THAT ARE LOCATED IN THE CENTER OF THE BLOCK SHALL HAVE "<- ->".
10. SIGNS THAT ARE AT THE BEGINNING AND END OF THE BLOCK HAVE "->" POINTING UP THE BLOCK.

DETAIL "A" - BLANK DIMENSIONS

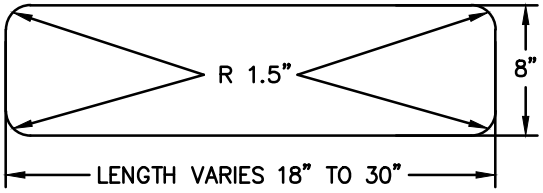

COP STANDARD DETAIL	STREET NAME SIGN	CITY ENGINEER	REVISED: 05/15	DETAIL No. 132P

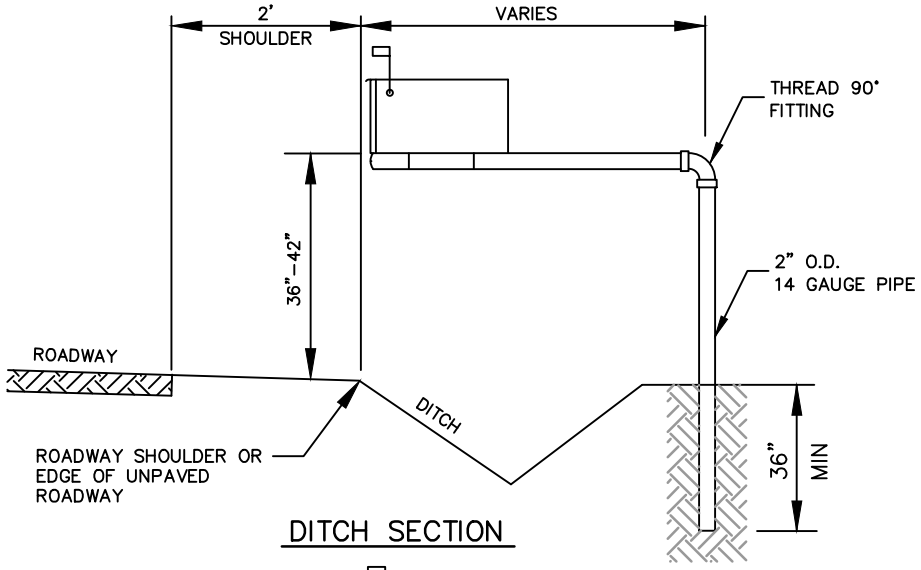

DITCH SECTION

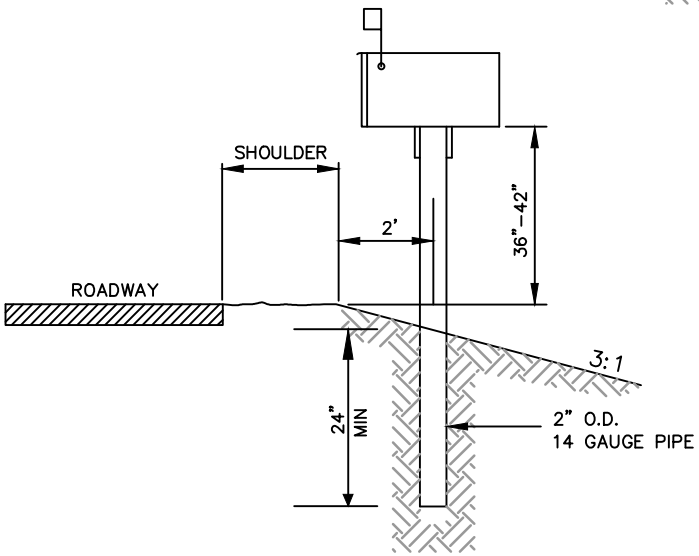

SHOULDER SECTION

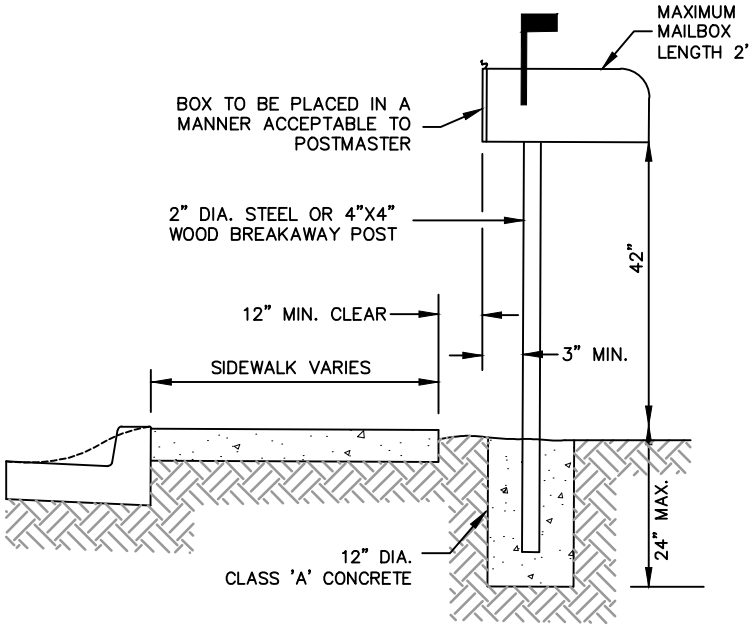

MAILBOX BEHIND SIDEWALK

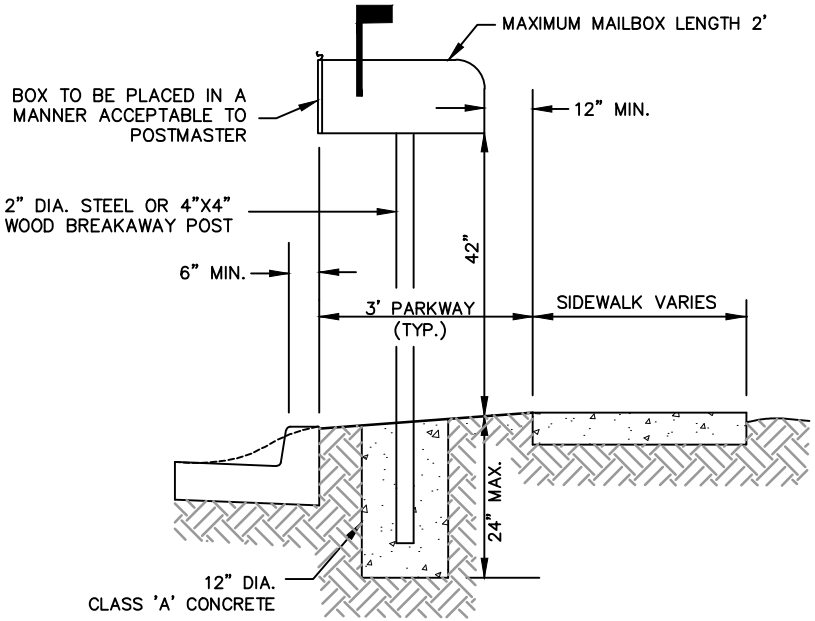

MAILBOX WITH PARKWAY

NOTES:

1. SOLID OR ANCHORED STRUCTURES IN RIGHT–OF–WAY SHALL BE BREAKAWAY CONSTRUCTION TO LIMIT DAMAGE & INJURIES.
2. ALTERNATE POST MOUNTED MAILBOX DESIGNS MEETING UNITED STATES POSTAL SERVICE SPECIFICATIONS AND REQUIREMENTS WILL BE CONSIDERED.
3. ANY DEVIATION FROM THIS DETAIL OR STANDARD MAILBOX MUST BE APPROVED BY THE AGENCY ENGINEER.

QUAD CITY STANDARD DETAIL	MAILBOX	REVISED: 3/16	DETAIL No. 134Q-1

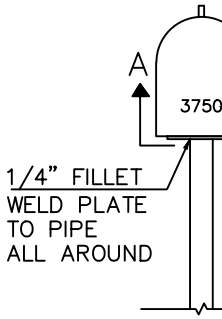

SINGLE MAILBOX INSTALLATION

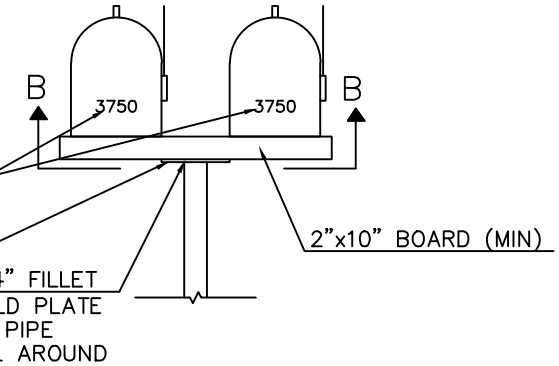

DOUBLE MAILBOX INSTALLATION

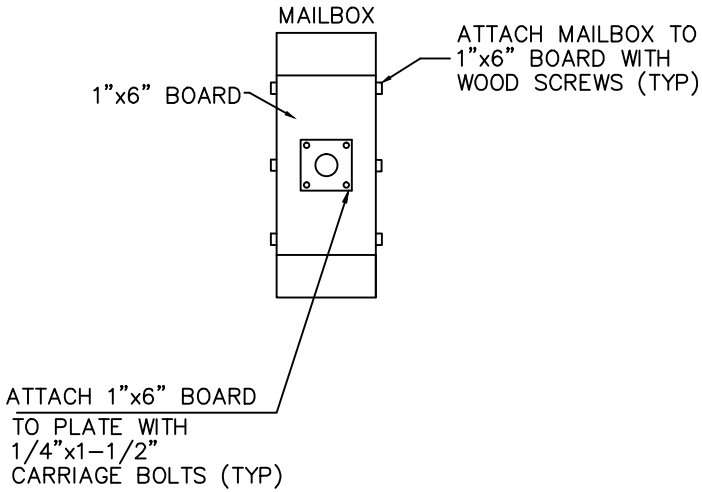

SECTION A–A

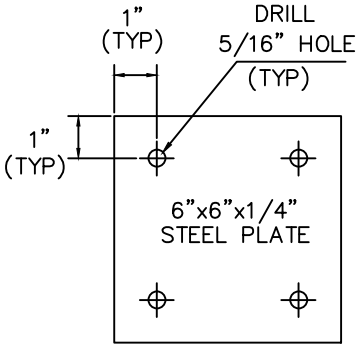

BASE PLATE

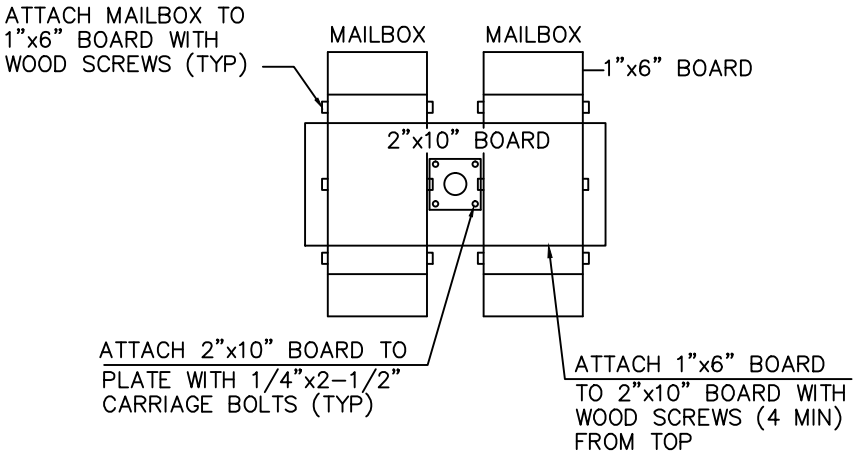

SECTION B–B

NOTE:

1. ALTERNATE POST MOUNTED MAILBOX DESIGNS MEETING UNITED STATES POSTAL SERVICE SPECIFICATIONS AND REQUIREMENTS WILL BE CONSIDERED.

QUAD CITY STANDARD DETAIL	MAILBOX	REVISED: 3/16	DETAIL No. 134Q-2

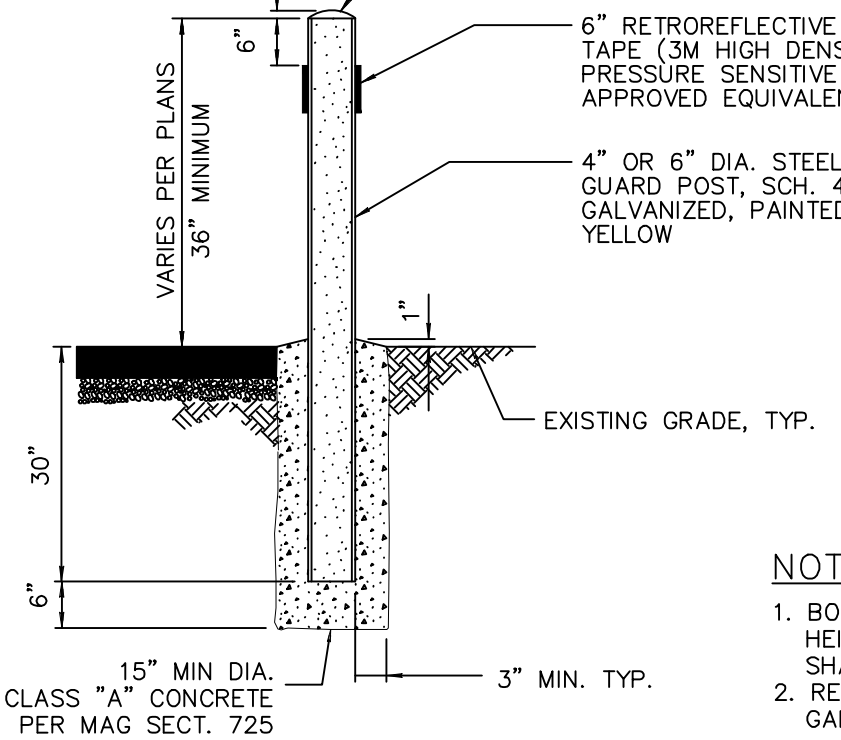

TYPE 1 PERMANENT

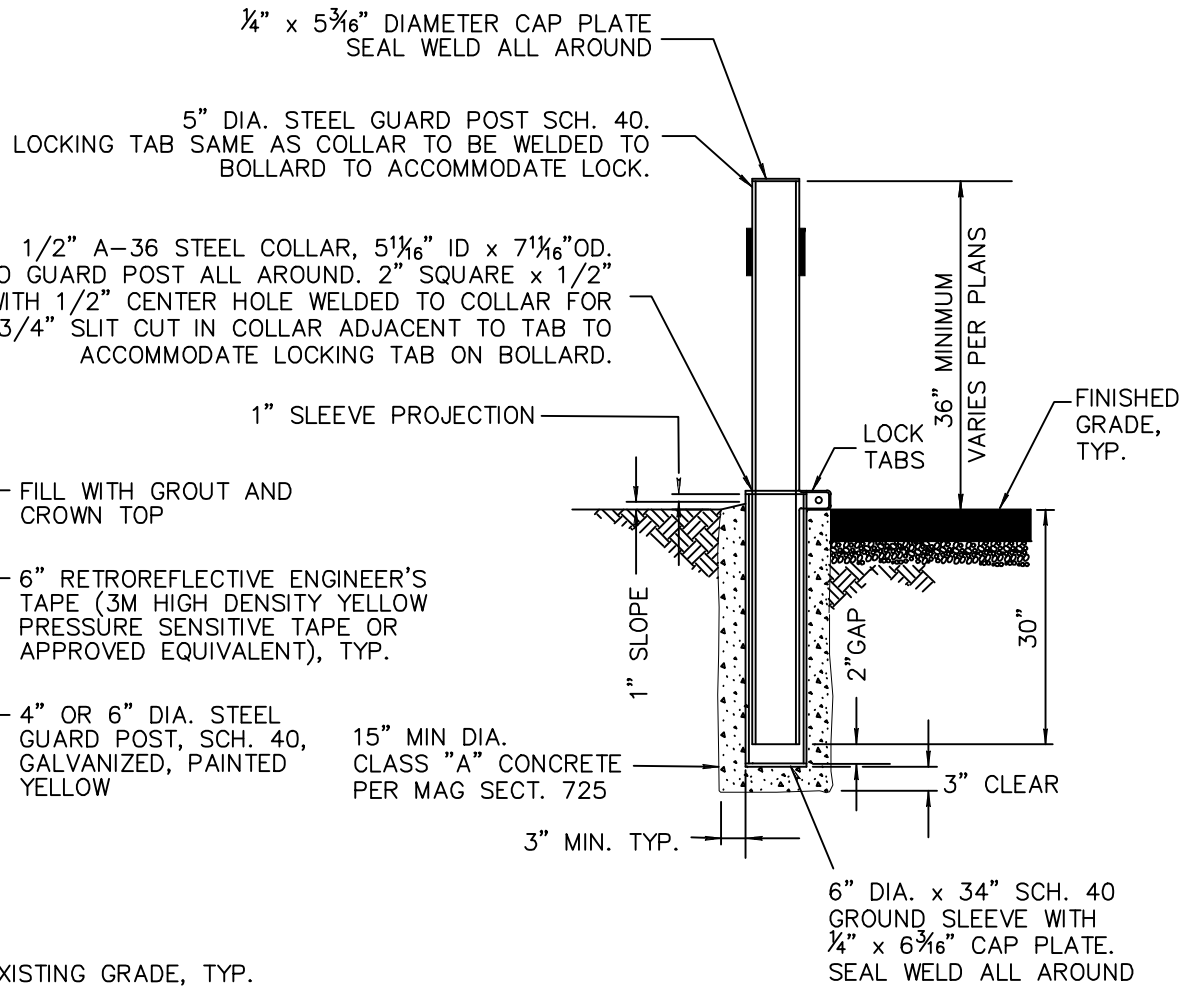

TYPE 2 REMOVABLE

NOTES

1. BOLLARDS SHALL HAVE A HEIGHT OF 3 FEET OR BE EQUAL TO THE HEIGHT OF THE BACK SCREEN WALL OF BIN ENCLOSURES. POSTS SHALL BE PLACED A MINIMUM OF 4" FROM THE WALL.
2. REMOVABLE POST – GRIND SMOOTH ALL SHARP EDGES PRIOR TO GALVANIZATION. GALVANIZE PER ASTM A54 AFTER FABRICATION.

QUAD CITY STANDARD DETAIL	BOLLARD	REVISED: 3/16	DETAIL No. 140Q

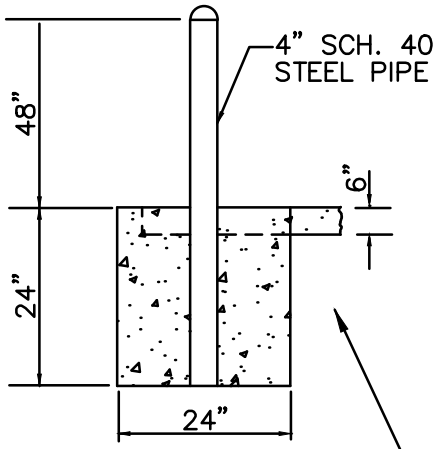

4' HIGH ABOVE PAD

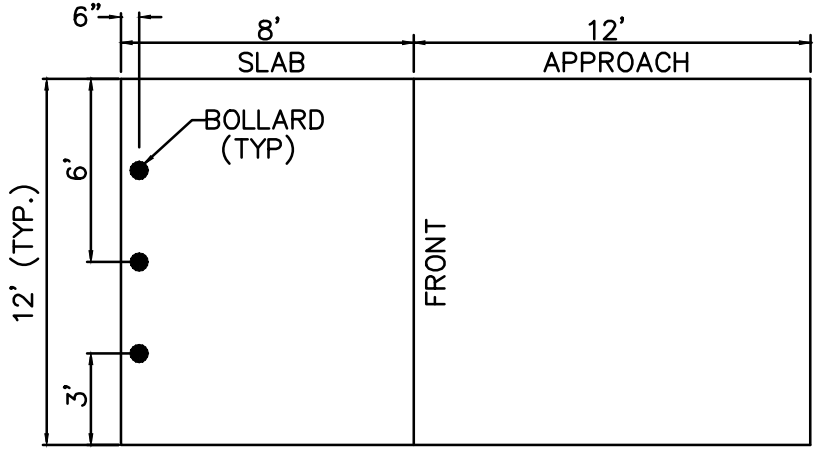

DETAIL "A"

4' HIGH CONC. FILLED BOLLARD – BURY 2' W/24" COLLAR

6' HIGH BLOCK WALL (OPTIONAL) EXCLUSIVE OF SLAB – REINFORCED W/#5 BARS 12" O.C. EA. WAY.

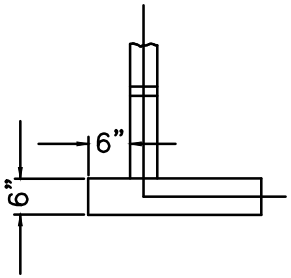

SECTION A–A

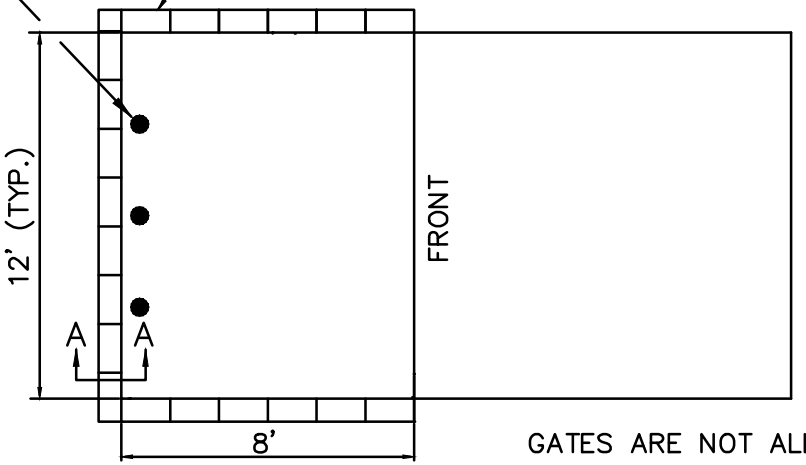

GATES ARE NOT ALLOWED

DETAIL "B"

SLAB DATA

1. MIN. 6" THICK CLASS "A" CONCRETE ON 4" A.B.C. 95% COMP. AS PER MAG SECTIONS 340 & 725
2. SLAB TO BE REINFORCED W/ 6x6 – 8/8 W.W.F.
3. SLAB TO BE POURED TO THE SAME ELEV. AS THE APPROACH.

COP STANDARD DETAIL	SANITATION DUMPSTER	CITY ENGINEER	REVISED: 05/15	DETAIL No. 144P

NOTES:

1. POSTS AND RAILS SHALL BE 2.0" SCHEDULE 40 STEEL PIPE ASTM A 53, GRADE B
2. PAINT RAIL PER MAG SPECIFICATIONS MAG SECTION 530 WHEN REQUIRED BY PLANS. SHOP PRIME WITH RUST INHIBITING PRIMER (FIELD REPAIR PRIMER AS NEEDED). COLOR TO BE PER AGENCY SPECIFICATIONS.
3. VERTICAL POSTS TO BE EVENLY SPACED PER DETAIL.
4. REMOVE ALL SHARP EDGES.
5. THE EMBEDMENT FOR ANCHOR TYPES 1, 2 AND 3 SHALL BE LOCATED INSIDE THE WALL REINFORCEMENT CAGE.

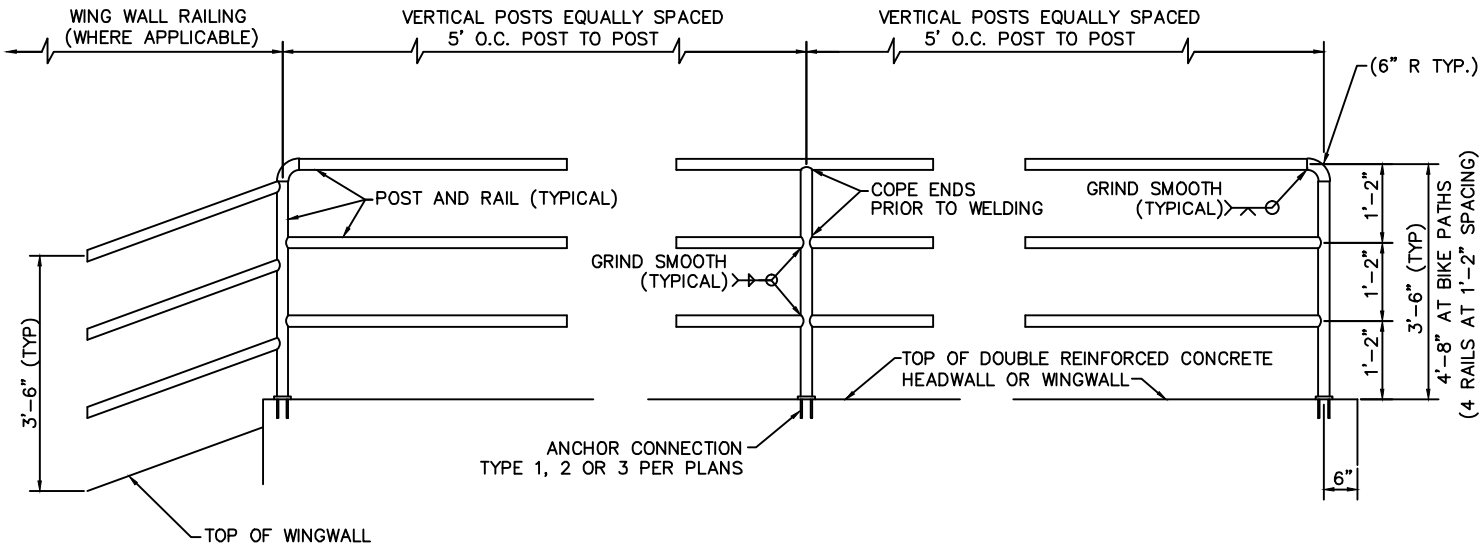

ELEVATION

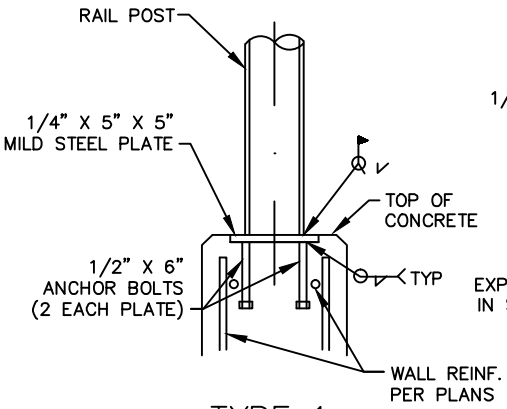

TYPE 1

ANCHOR PLATE DETAIL

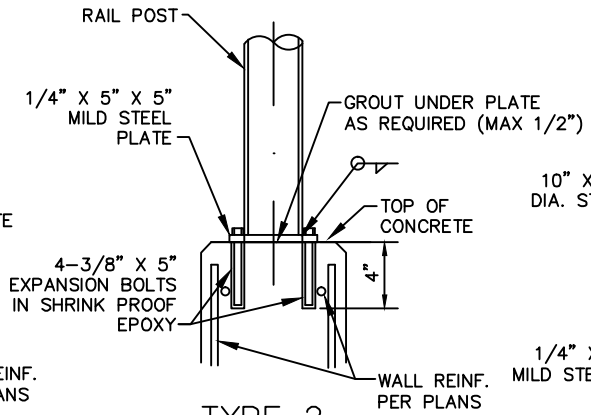

TYPE 2

EXPANSION BOLT DETAIL

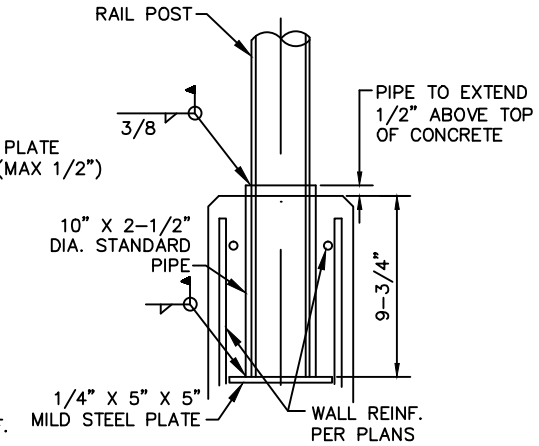

TYPE 3

PIPE SLEEVE DETAIL

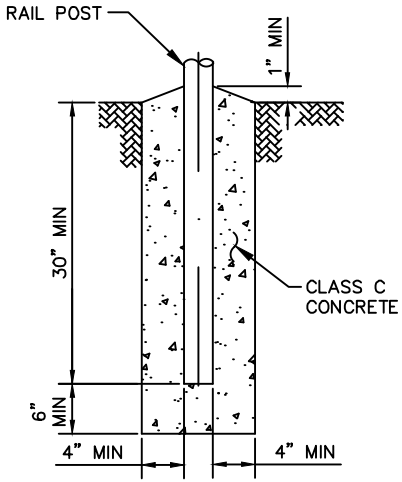

TYPE 4

GROUND INSTALLATION DETAIL

NOTE: SEE PLANS FOR ANCHORAGE DETAILS FOR ATTACHMENT TO SINGULARLY REINFORCED AND NON-REINFORCED WALLS.

QUAD CITY STANDARD DETAIL	SAFETY RAIL	REVISED: 3/16	DETAIL No. 145Q

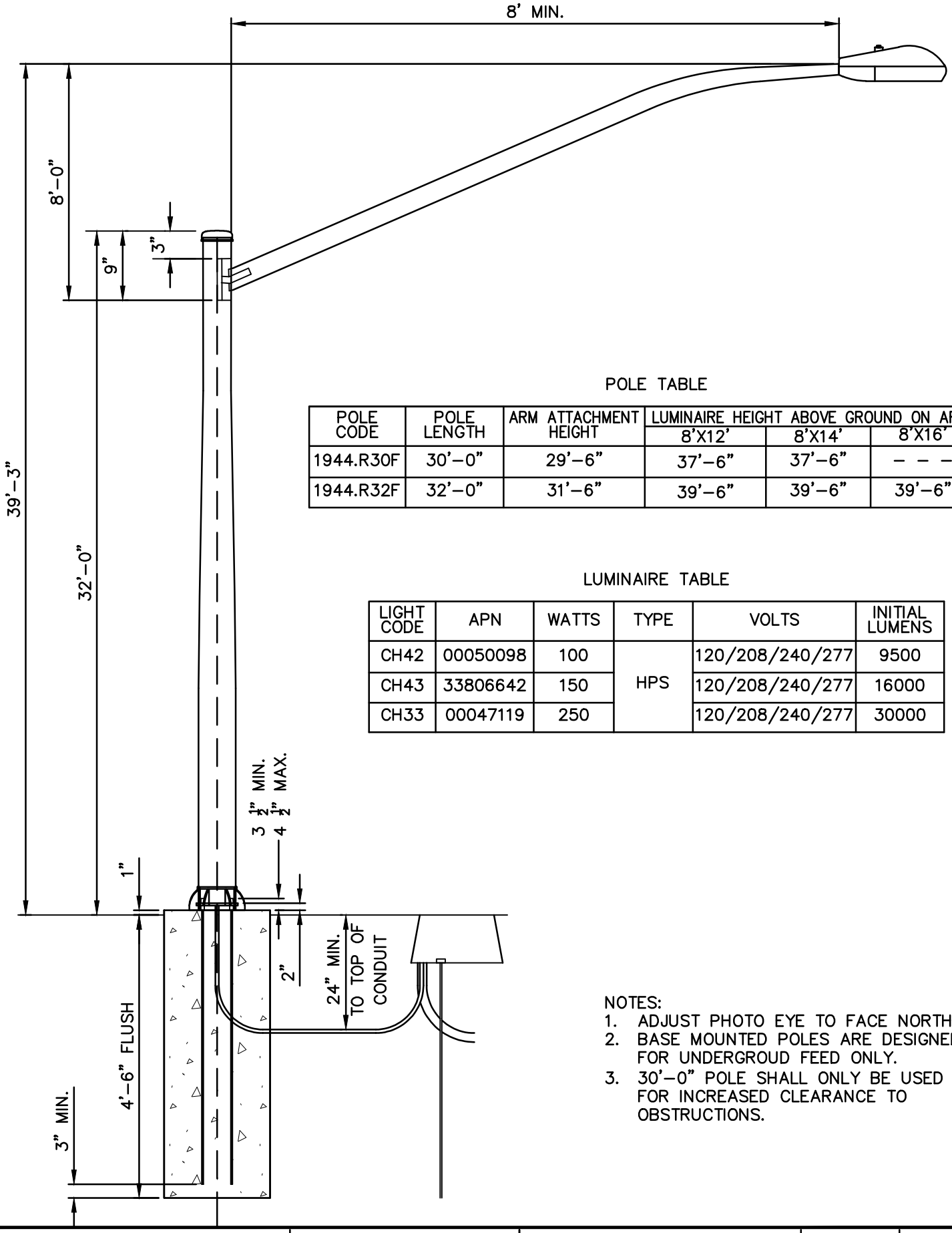

POLE TABLE

POLE CODE	POLE LENGTH	ARM ATTACHMENT HEIGHT	LUMINAIRE HEIGHT ABOVE GROUND ON ARM		
			8'X12'	8'X14'	8'X16'
1944.R30F	30'-0"	29'-6"	37'-6"	37'-6"	- - -
1944.R32F	32'-0"	31'-6"	39'-6"	39'-6"	39'-6"

LUMINAIRE TABLE

LIGHT CODE	APN	WATTS	TYPE	VOLTS	INITIAL LUMENS
CH42	00050098	100	HPS	120/208/240/277	9500
CH43	33806642	150		120/208/240/277	16000
CH33	00047119	250		120/208/240/277	30000

NOTES:
1. ADJUST PHOTO EYE TO FACE NORTH.
2. BASE MOUNTED POLES ARE DESIGNED FOR UNDERGROUD FEED ONLY.
3. 30'-0" POLE SHALL ONLY BE USED FOR INCREASED CLEARANCE TO OBSTRUCTIONS.

COP STANDARD DETAIL	BASE MOUNTED LUMINAIRE	CITY ENGINEER	REVISED: 05/15	DETAIL No. 170P

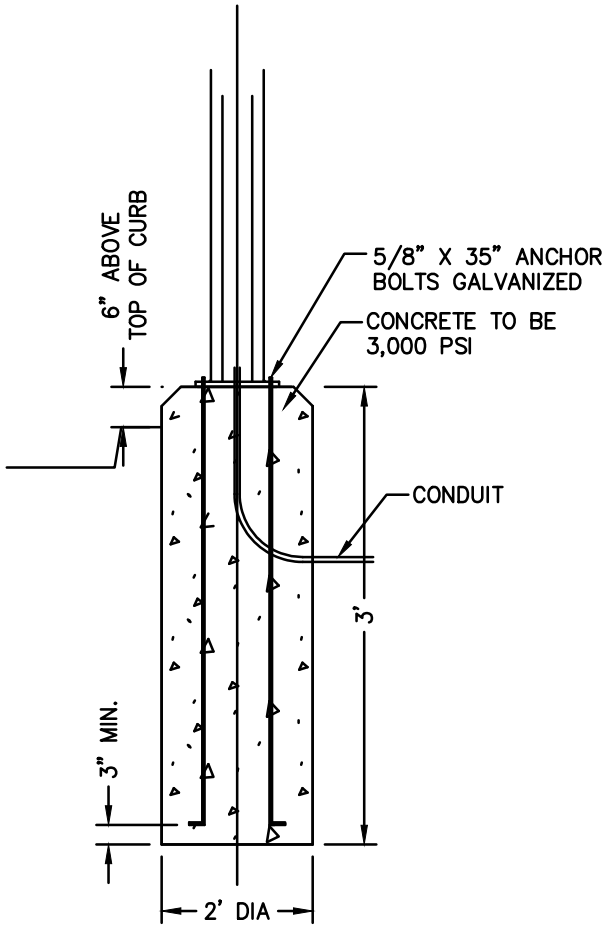

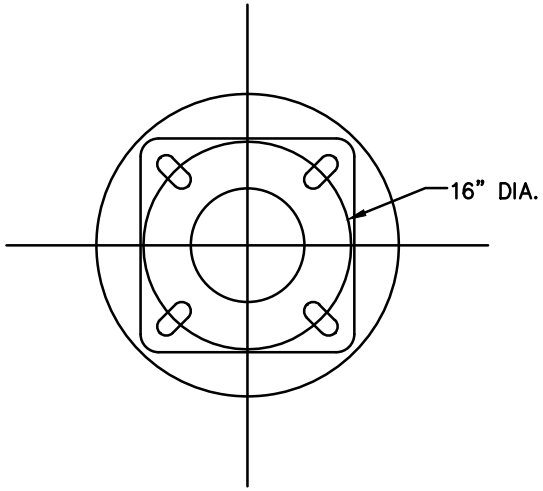

NOT TO SCALE

COP STANDARD DETAIL	ANTIQUE STREET LIGHT FOUNDATION	CITY ENGINEER	REVISED: 05/15	DETAIL No. 173P

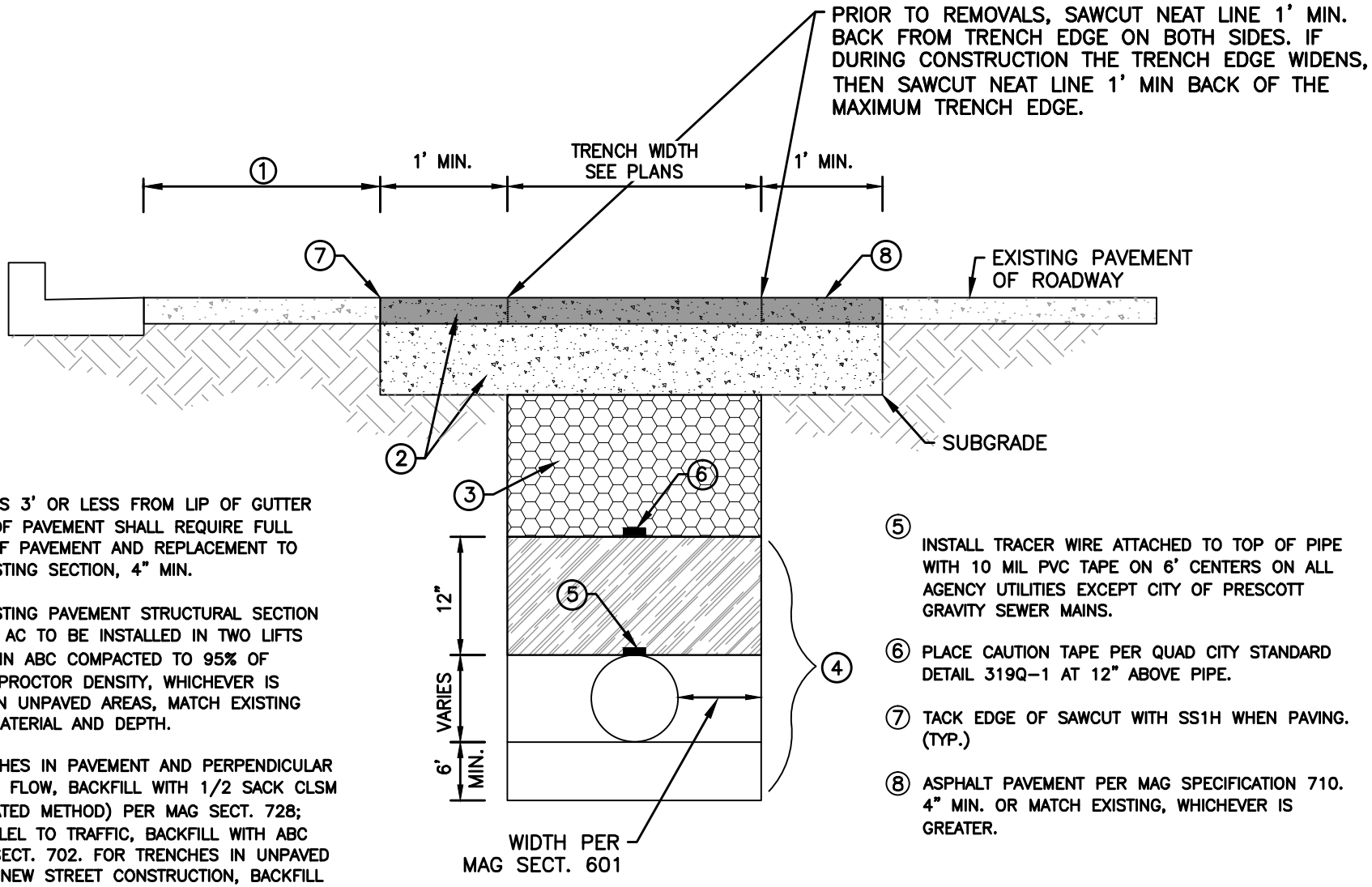

① EXCAVATIONS 3' OR LESS FROM LIP OF GUTTER OR EDGE OF PAVEMENT SHALL REQUIRE FULL REMOVAL OF PAVEMENT AND REPLACEMENT TO MATCH EXISTING SECTION, 4" MIN.

② MATCH EXISTING PAVEMENT STRUCTURAL SECTION OR 4" MIN AC TO BE INSTALLED IN TWO LIFTS OVER 8" MIN ABC COMPACTED TO 95% OF STANDARD PROCTOR DENSITY, WHICHEVER IS GREATER. IN UNPAVED AREAS, MATCH EXISTING SURFACE MATERIAL AND DEPTH.

③ FOR TRENCHES IN PAVEMENT AND PERPENDICULAR TO TRAFFIC FLOW, BACKFILL WITH 1/2 SACK CLSM (CONSOLIDATED METHOD) PER MAG SECT. 728; AND PARALLEL TO TRAFFIC, BACKFILL WITH ABC PER MAG SECT. 702. FOR TRENCHES IN UNPAVED AREAS OR NEW STREET CONSTRUCTION, BACKFILL TRENCH TO SURFACE WITH 3" MINUS SCREENED NATIVE MATERIAL.

④ GRANULAR BEDDING/SHADING MATERIAL SHALL BE PER MAG SECT. 601 WITH 100% PASSING 1" SIEVE, MAXIMUM 10 P.I.. THE COMBINATION OF PERCENT MATERIAL PASSING THROUGH #200 PLUS P.I. SHALL NOT EXCEED 22.

⑤ INSTALL TRACER WIRE ATTACHED TO TOP OF PIPE WITH 10 MIL PVC TAPE ON 6' CENTERS ON ALL AGENCY UTILITIES EXCEPT CITY OF PRESCOTT GRAVITY SEWER MAINS.

⑥ PLACE CAUTION TAPE PER QUAD CITY STANDARD DETAIL 319Q-1 AT 12" ABOVE PIPE.

⑦ TACK EDGE OF SAWCUT WITH SS1H WHEN PAVING. (TYP.)

⑧ ASPHALT PAVEMENT PER MAG SPECIFICATION 710. 4" MIN. OR MATCH EXISTING, WHICHEVER IS GREATER.

NOTE: BEDDING, SHADING, AND BACKFILL SHALL BE COMPACTED TO 95% PROCTOR DENSITY PER ASTM D-698. MIN. 1 TEST PER LIFT PER 200'. EXPOSED SUBGRADE TO BE COMPACTED TO 95% PROCTOR DENSITY PER ASTM D-698. PAVED SURFACE TO BE COMPACTED TO 95% MARSHALL DENSITY PER ASTM D-6927-15.

QUAD CITY STANDARD DETAIL	TRENCH BACKFILL AND SURFACE REPLACEMENT	REVISED: 3/16	DETAIL No. 200Q

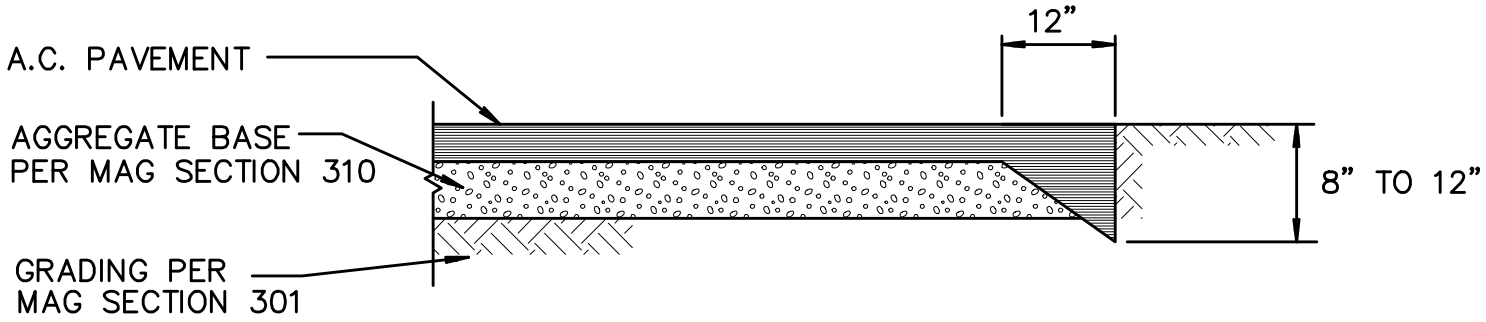

NOTES:

1. THICKENED EDGE REQUIRED AT ALL TRANSVERSE TERMINATIONS OF PAVING AND AT LONGITUDINAL EDGES FOR ASPHALT PAVEMENTS UNCONFINED BY CURB & GUTTER.

2. MATCHLINE TO EXISTING PAVEMENTS SHALL BE SKEWED OR OFFSET FOR SMOOTHER TRANSITION. LOCATION OF SAWCUT SHALL BE AS DIRECTED BY THE AGENCY ENGINEER OR HIS DESIGNEE.

3. EXISTING EDGES SHALL BE UNDISTURBED NATIVE, FIRM, & UNYIELDING SOIL OR FORMED TO PROVIDE FULLY COMPACTED STRAIGHT EDGES.

QUAD CITY STANDARD DETAIL	THICKENED EDGE PAVEMENT SECTION	REVISED: 3/16	DETAIL No. 201Q

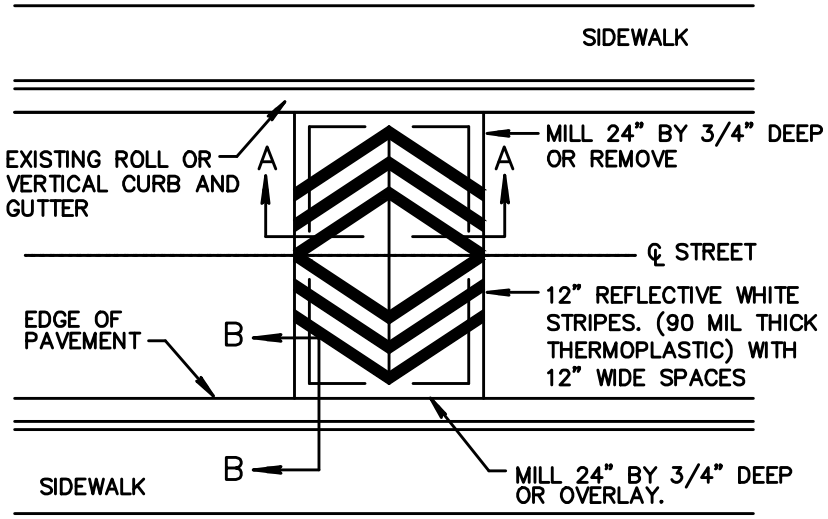

PLAN VIEW

NOTES:

1. SPEED HUMPS SHALL NOT BE PLACED OVER MANHOLES, WATER VALVES, SURVEY MONUMENTS OR ANY SUBSURFACE INFRASTRUCTURE INDICATOR.
2. SPEED HUMPS SHALL NOT BE INSTALLED IN A LOCATION SUCH THAT ROADWAY DRAINAGE IS COMPROMISED.
3. SPEED HUMPS TO BE CONSTRUCTED WITH TYPE R-1.5 (D-1/2) COURSE, M.A.G. SPECIFICATIONS SECTION 710. A TACK COAT SHALL BE APPLIED PRIOR TO APPLICATION OF PAVEMENT MATERIAL.
4. CONTACT THE AGENCY ENGINEER ONE WEEK PRIOR TO INSTALLATION TO COORDINATE MARKINGS & SIGNING.

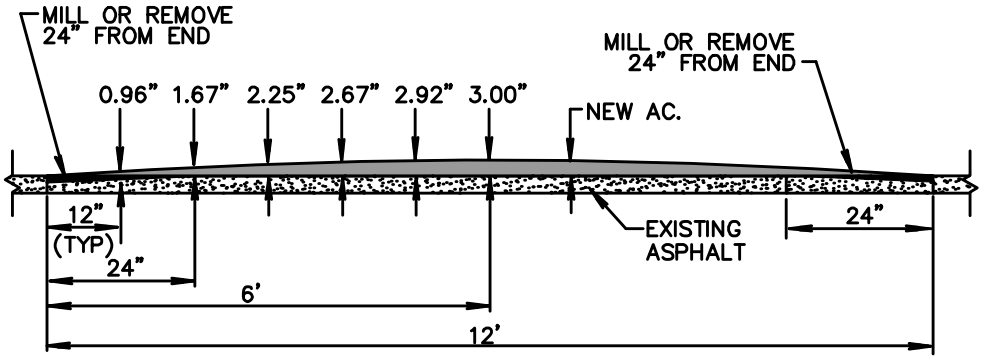

SECTION A–A

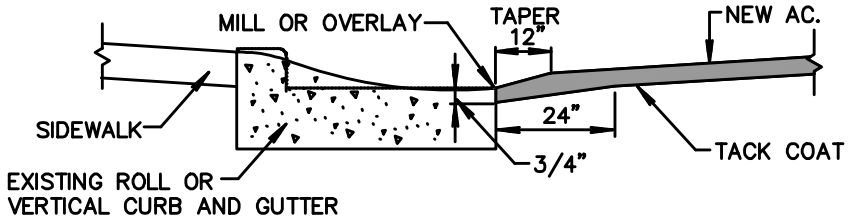

SECTION B–B

IMPORTANT:
TO GAIN MAXIMUM EFFECT, HUMPS MUST BE THE FULL 3". CONTRACTORS MUST NOT EXCEED THIS HEIGHT BASED ON CONSIDERATION FOR EMERGENCY POLICE AND FIRE DEPARTMENT VEHICLES.

QUAD CITY STANDARD DETAIL	RESIDENTIAL SPEED HUMP	REVISED: 3/16	DETAIL No. 210Q

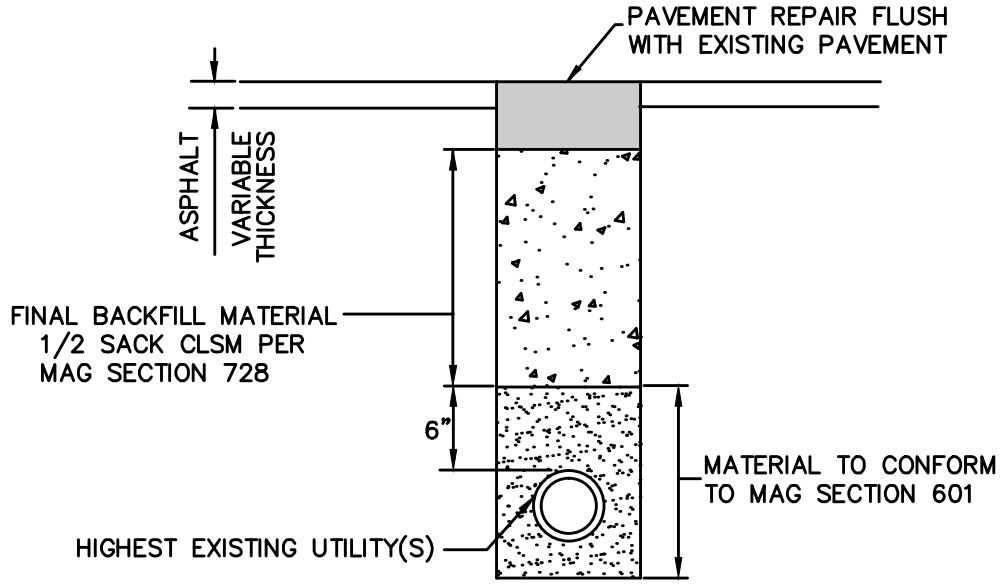

SECTION VIEW

PAVEMENT REPAIR

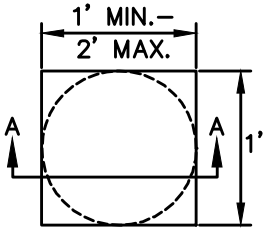

PLAN VIEW

NOTES:
1. DIMENSIONS ARE NOMINAL.
2. EDGES SHALL BE CUT TO A NEAT VERTICAL FACE.
3. PLACE CLSM BACKFILL IN ACCORDANCE WITH MAG SECTION 604.
4. PLACE ASPHALT CONCRETE IN MAXIMUM 2" LIFTS.

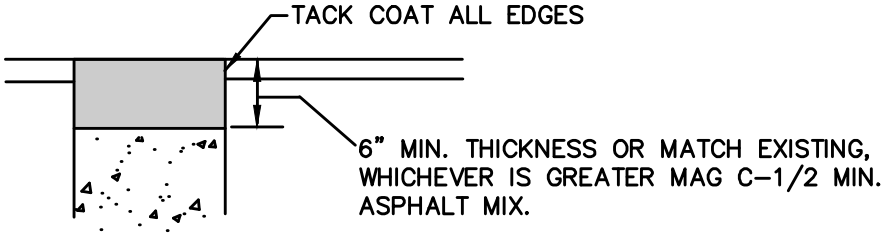

SECTION A–A

QUAD CITY STANDARD DETAIL	SOFT DIG POTHOLE REPAIR	REVISED: 3/16	DETAIL No. 212Q

VERTICAL CURB AND GUTTER (TYPE A)

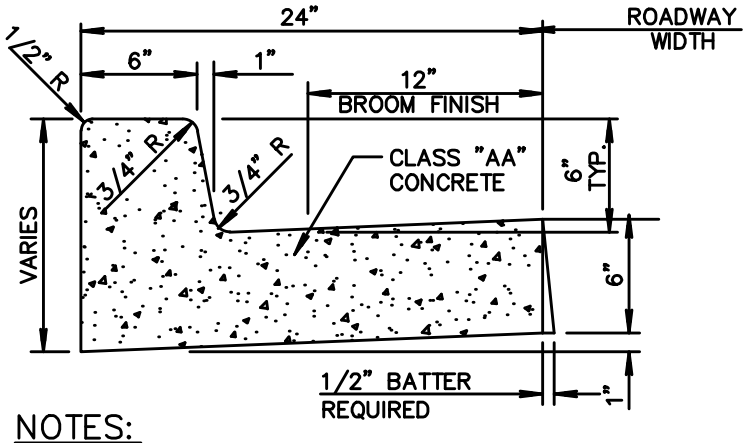

ROLL CURB AND GUTTER (TYPE C)

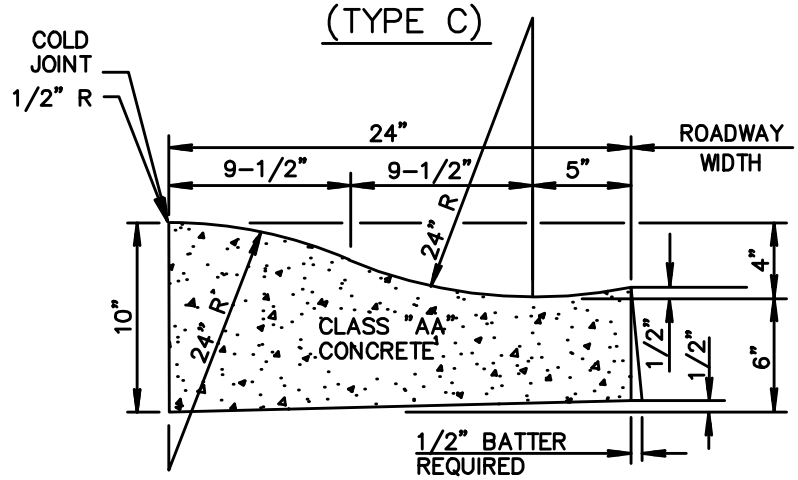

RIBBON CURB (TYPE B)

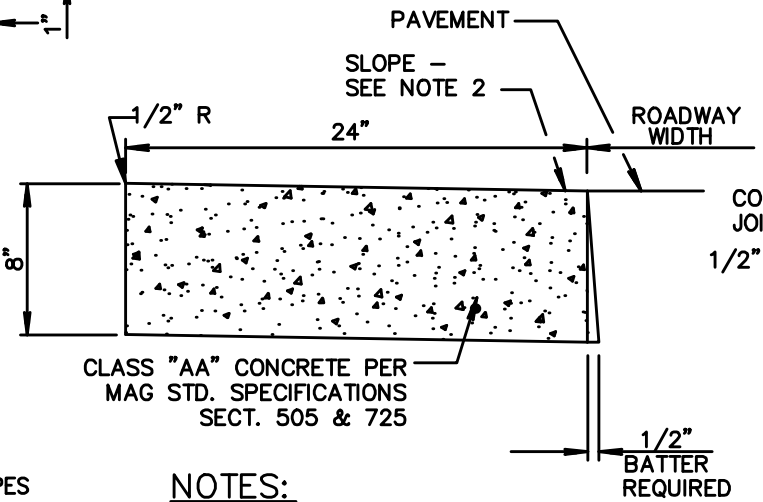

NOTES:

1. ALL EXPOSED SURFACES TO BE TROWEL FINISHED EXCEPT AS SHOWN. SEE MAG SECT. 340 & 505 & 725
2. HEIGHT OF TYPE 'A' CURB SHALL BE 6" UNLESS SPECIFIED ON PLANS
3. CONTRACTION JOINT SPACING 10' MAXIMUM.
4. EXPANSION JOINTS AS PER MAG SECT. 340 50' MAX. AND AT P.C., DWY., ALLEYS & STRUCTURES
5. 4" MINIMUM OF ABC COMPACTED 95% PROCTOR SHALL EXTEND TO BACK OF CURB BELOW ALL CURB & GUTTER.
6. WHEN THE ADJACENT PAVEMENT SECTION SLOPES AWAY FROM THE GUTTER, THE SLOPE OF THE GUTTER PAN SHALL MATCH PAVEMENT CROSS SLOPE.
7. ¼" ROUND FINISH SHALL BE REQUIRED AT LIP OF GUTTER, ALL DETAILS.
8. FINAL PAVEMENT SURFACE SHALL BE ¼" ABOVE GUTTERS EXCEPT TYPE D AND WHERE GUTTER SLOPES TOWARD PAVEMENT.
9. 3 – ½"X12" DOWELS SHALL BE PLACED WHEN ATTACHING NEW CURB TO EXISTING CURB.

NOTES:

1. CONSTRUCT CURB AND INSTALL 1/2" MASTIC EXPANSION JOINTS, A.S.T.M. D–1751 AND MAG SECT. 340.
2. RIBBON CURB MAY SLOPE TOWARDS PAVEMENT OR PARKWAY AS INDICATED ON PLANS.

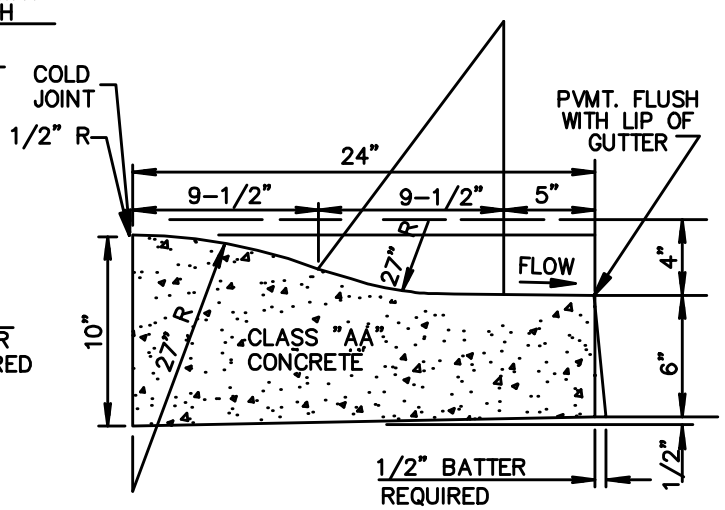

(TYPE D)

SPECIAL SECT. USE FOR HIGH SIDE CURB WITH SHEET DRAINAGE REVERSE FLOW ACROSS STREET

QUAD CITY STANDARD DETAIL	CURB AND GUTTER TYPES A, B, C AND D	REVISED: 3/16	DETAIL No. 220Q-1

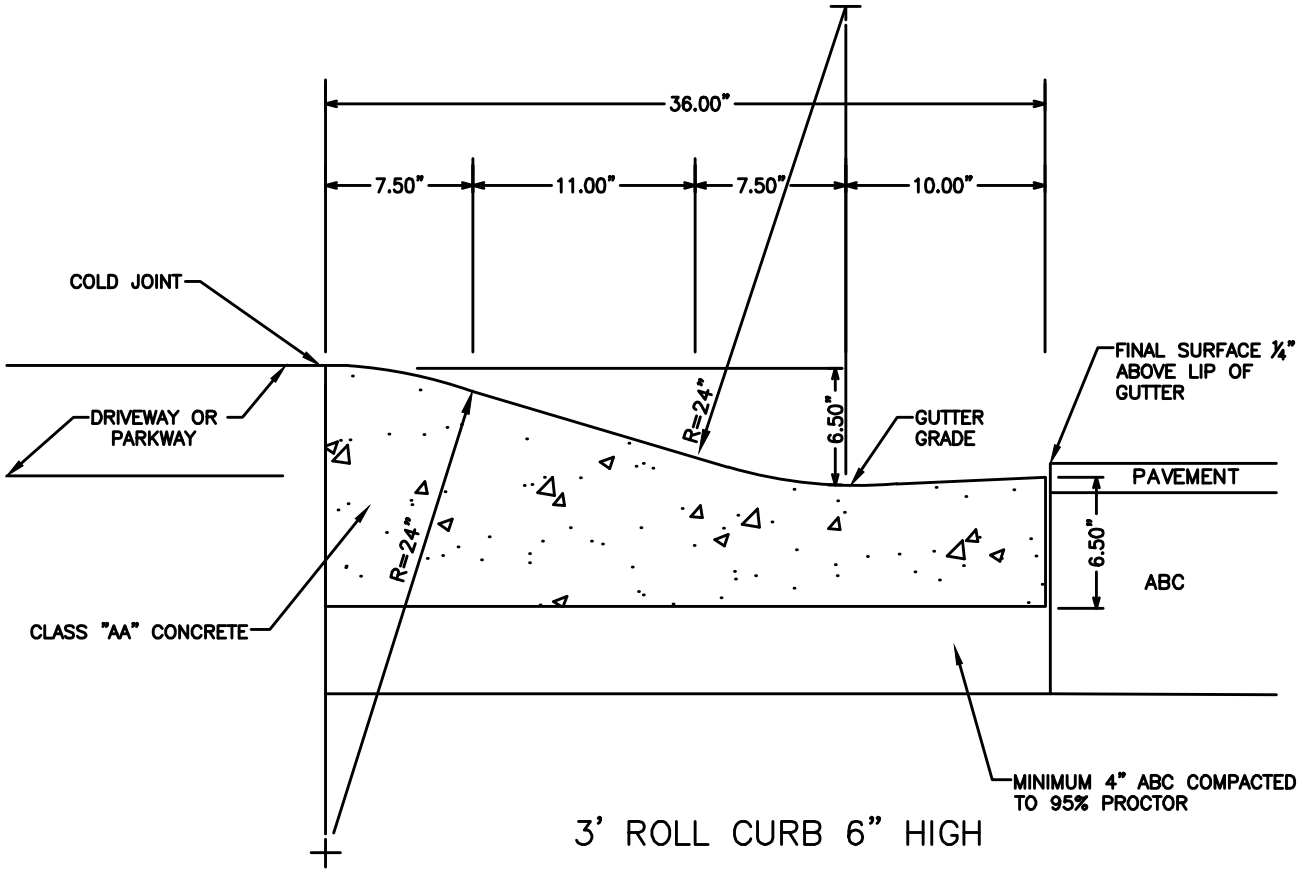

3' ROLL CURB 6" HIGH

TRANSITION

3' ROLL CURB, 6" HIGH
TO
2' ROLL CURB, 4" HIGH

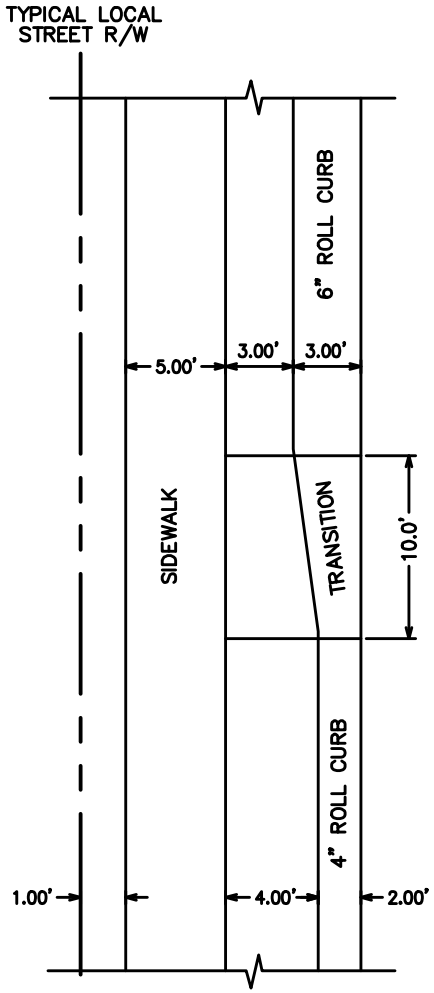

PLAN VIEW

NOTES:

1. ALL WORK AND MATERIALS SHALL CONFORM TO MAG STANDARD SPECIFICATIONS, SECTION 340, 505, AND 725 BROOM FINISH EXPOSED SURFACE.
2. CONTRACTION JOINT SPACING SHALL BE A MAXIMUM OF 10 FEET.
3. EXPANSION JOINTS SHALL BE CONSTRUCTED AS PER MAG STANDARD SPECIFICATIONS SECTION 340.

QUAD CITY STANDARD DETAIL	3' ROLL CURB	REVISED: 3/16	DETAIL No. 220Q-2

CURB TRANSITION TYPE 'A' TO TYPE 'C'

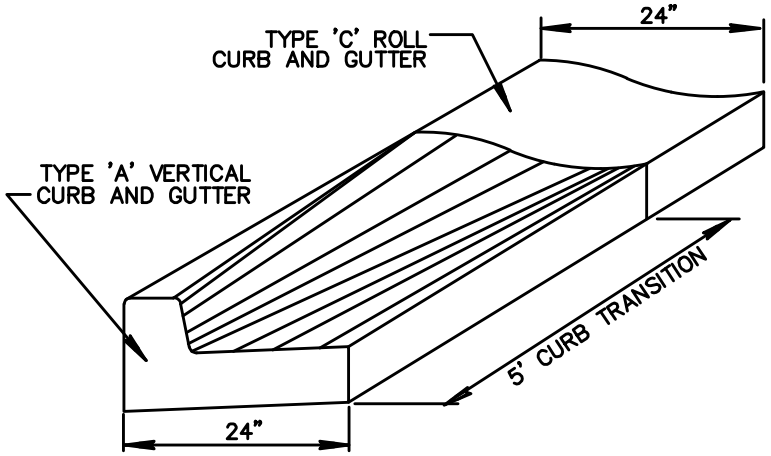

CURB AND GUTTER TRANSITION

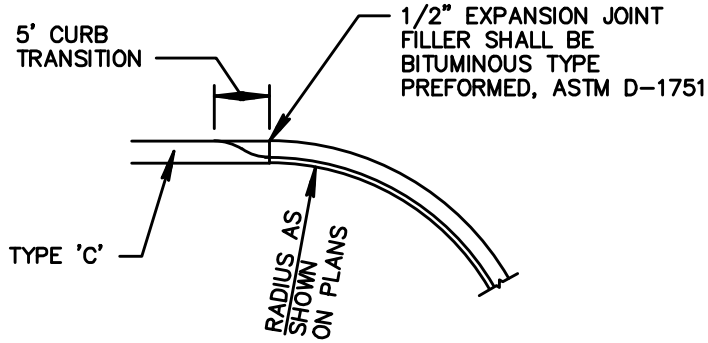

INTEGRAL ROLL CURB, GUTTER AND SIDEWALK

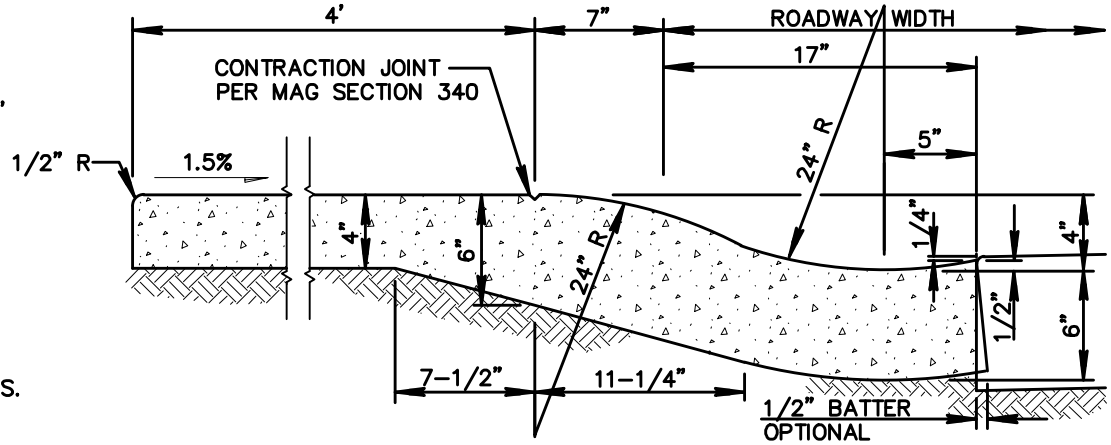

NOTES: (CURB AND GUTTER TRANSITIONS)

1. TRANSITIONS WILL BE PAID FOR AS THE PREDOMINANT TYPE OF CURB AND GUTTER BEING TRANSITIONED. WHEN TYPE 'A' CURB AND GUTTER ARE USED AT CURB RETURNS AND TYPE 'C' CURB AND GUTTER IS PREDOMINANTLY USED ELSEWHERE, THE TYPE 'A' TO TYPE 'C' TRANSITIONS SHALL BE MEASURED AND PAID FOR AS TYPE 'C' CURB AND GUTTER.
2. WHERE PROPOSED CONSTRUCTION IS TO BE CONNECTED TO EXISTING CURB AND GUTTER, THE TRANSITION SHALL BE INDICATED ON PLANS.
3. CLASS 'AA' CONCRETE PER MAG SECTION 725.
4. TRANSITION BETWEEN TYPICAL SECTIONS SHALL BE ACCOMPLISHED BY THE USE OF DIRECT STRAIGHT LINE TRANSITIONS OF THE FLOW LINE AND OTHER SURFACE FEATURES.
5. 4" MINIMUM OF ABC COMPACTED TO 95% PROCTOR BELOW ALL CURB & GUTTER.

NOTES: (INTEGRAL ROLL CURB, GUTTER AND SIDEWALK)

1. CONCRETE TO BE MONOLITHIC POUR. EXPOSED SURFACE FINISH AS PER SIDEWALK AND GUTTER DETAIL.
2. CONTRACTION JOINT SPACING 5' MAXIMUM.
3. EXPANSION JOINTS PER MAG SECTION 340.
4. CLASS 'AA' CONCRETE PER MAG SECTION 725.
5. 4" MINIMUM OF ABC COMPACTED TO 95% PROCTOR BELOW ALL CURB & GUTTER.

QUAD CITY STANDARD DETAIL	CURB AND GUTTER TRANSITION TYPE 'A' TO TYPE 'C' & INTEGRAL ROLL CURB AND SIDEWALK	REVISED: 3/16	DETAIL No. 221Q

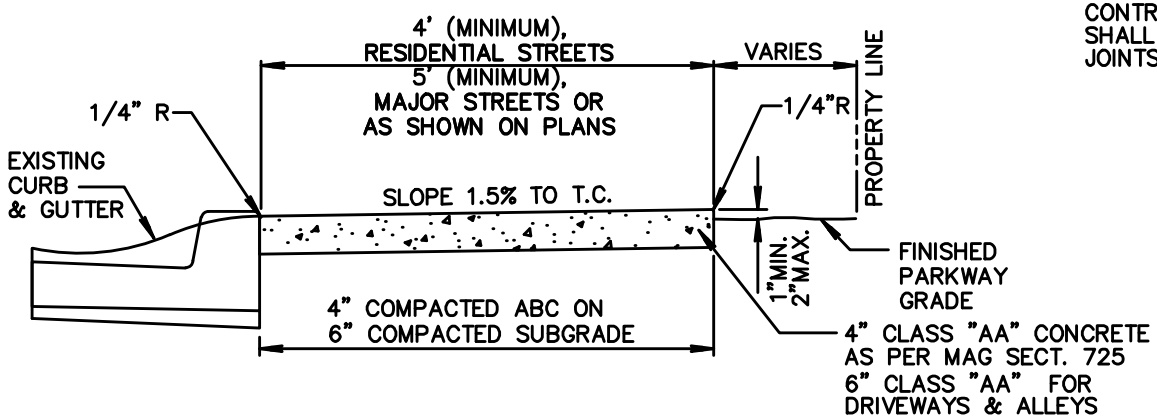

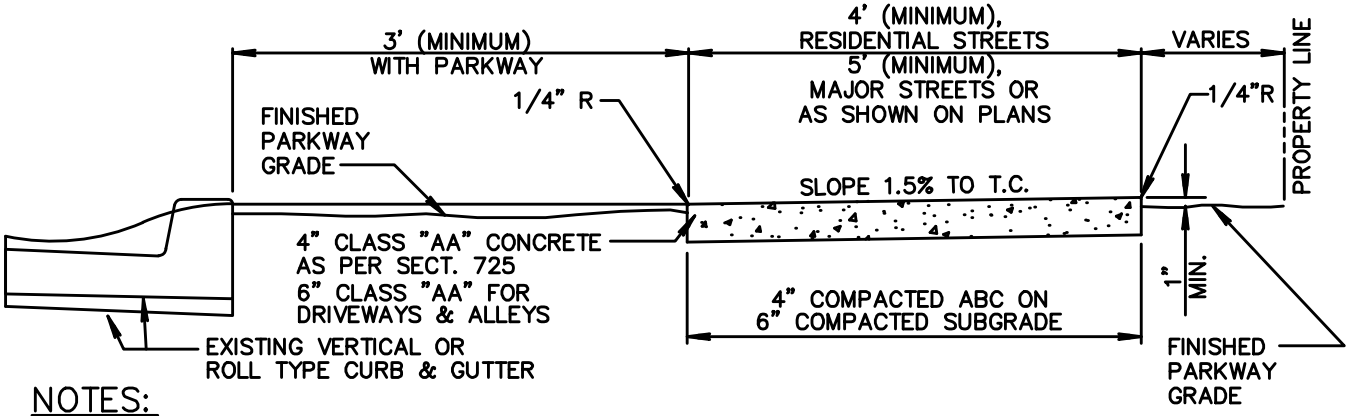

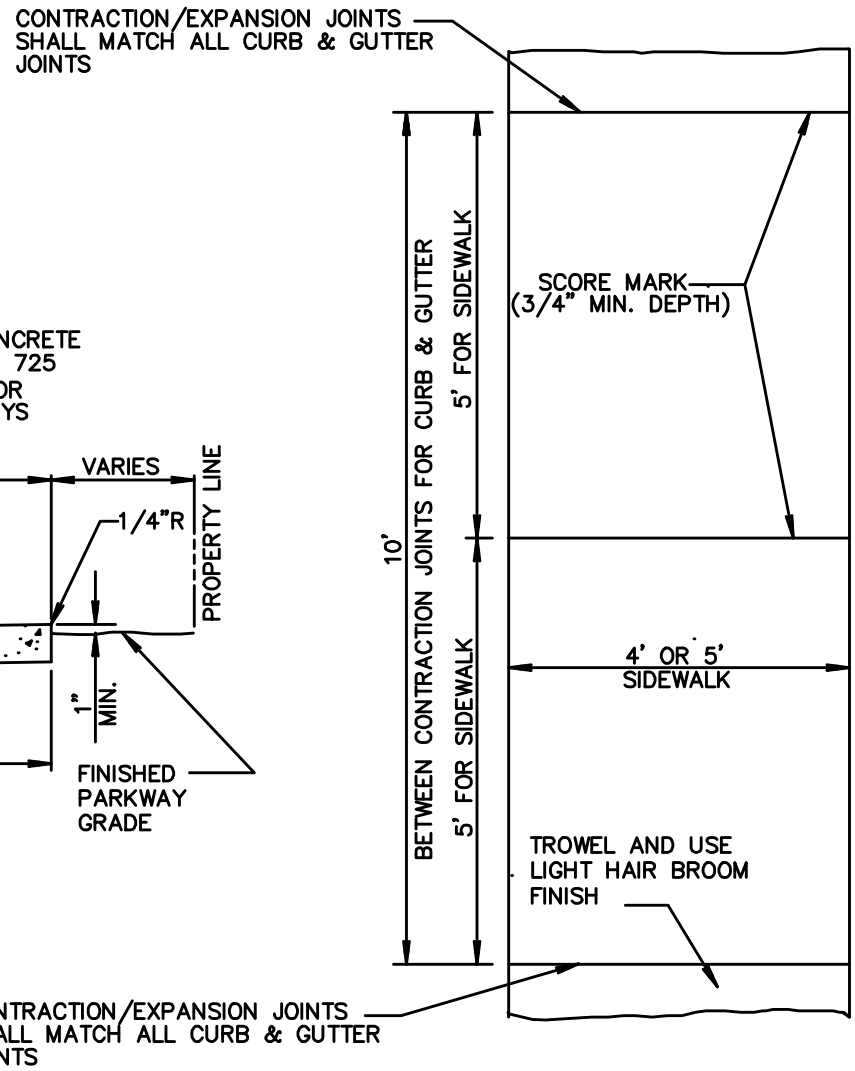

NOTES:

1. SIDEWALK CONSTRUCTION SHALL CONFORM TO MAG SECTIONS 725 & 340.
2. EXPANSION JOINT FILLER SHALL BE 1/2" BITUMINOUS TYPE PREFORMED EXPANSION JOINT FILLER, A.S.T.M. D–1751.
3. LARGE AGGREGATE, IN CONTRACTION JOINT, SHALL BE SEPARATED TO A DEPTH OF 1". FINISH DEPTH SHALL BE A MINIMUM OF 3/4".
4. EXPANSION JOINT 50' MAX. SPACING PER MAG SECT. 340 AND AT ALL P.C.'S, DRIVEWAYS, ALLEYS, AND STRUCTURES.
5. SUBGRADE TO BE COMPACTED TO 95% OF MAXIMUM PER MAG SECT. 301. MOISTURE TO BE 2% OVER OPTIMUM IN COHESIVE SOILS.
6. 4" MINIMUM OF ABC COMPACTED TO 95% PROCTOR SHALL EXTEND TO BACK OF SIDEWALK.

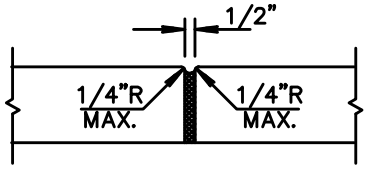

EXPANSION JOINT

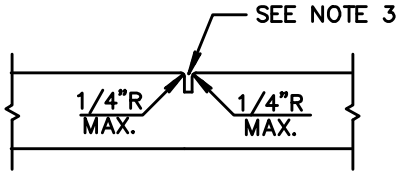

CONTRACTION JOINT

QUAD CITY STANDARD DETAIL	SIDEWALKS	REVISED: 3/16	DETAIL No. 230Q

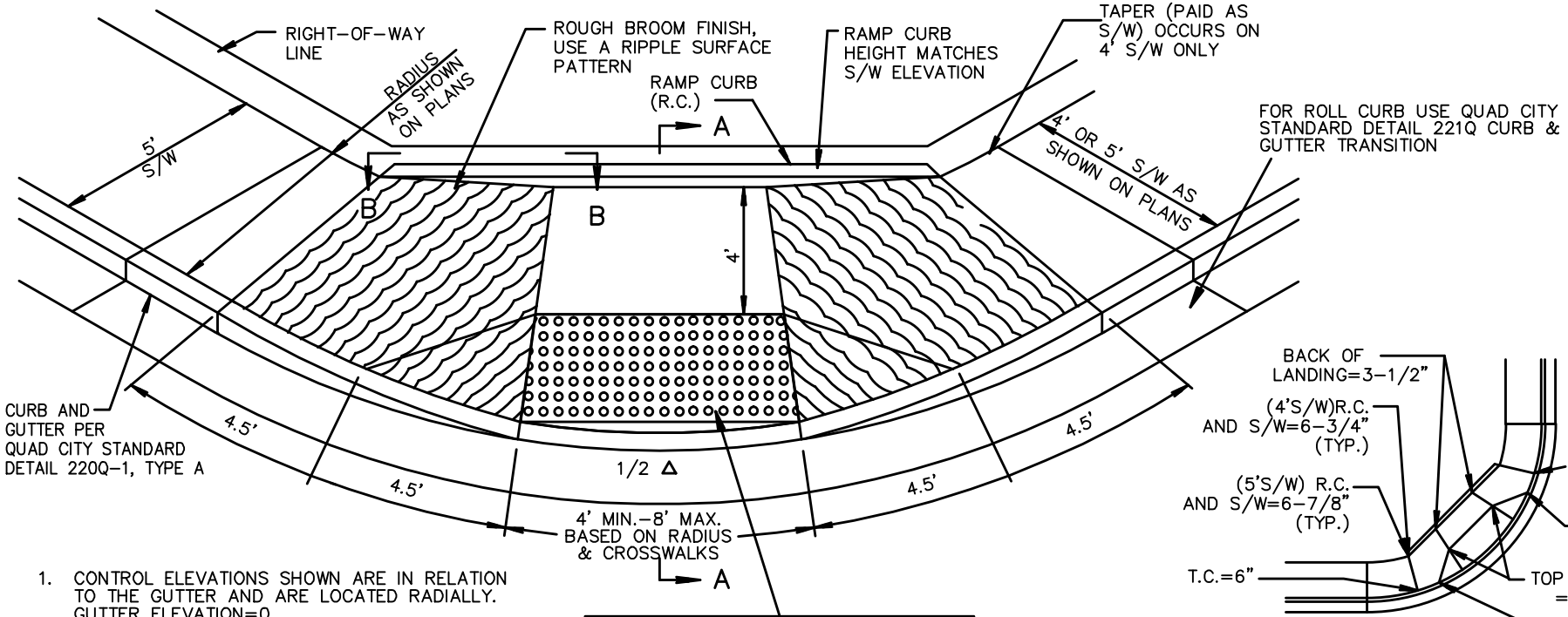

1. CONTROL ELEVATIONS SHOWN ARE IN RELATION TO THE GUTTER AND ARE LOCATED RADIALLY. GUTTER ELEVATION=0.
2. CLASS "AA" CONCRETE CONSTRUCTION AS PER MAG SECTIONS 725 & 340.
3. NON-DIRECTIONAL RAMP MAY BE USED ON LOCAL STREET/LOCAL STREET INTERSECTIONS ONLY.
4. SIDEWALK AND RAMP SHALL BE 6" CLASS "AA" CONCRETE TO 10' ON BOTH SIDES OF RAMP.
5. LENGTH OF WINGS VARY WITH RUNNING SLOPE OF ROADS. SEE WING LENGTH TABLE. MAXIMUM SLOPE OF RAMPS SHALL NOT EXCEED A.D.A. REQUIRED 8.33%.
6. 4" MINIMUM OF ABC COMPACTED TO 95% PROCTOR SHALL EXTEND TO BACK OF RAMP.

WING LENGTH TABLE

CURB FACE	RADIUS (FT)	SIDE SLOPE	X	T.C. GRADE (ALONG CURB RETURN)					
				1%	2%	3%	4%	5%	6%
6"	25'	8.33%	X_S	5.4'	4.9'	4.5'	4.1'	3.8'	3.5'
			X_L	6.9'	7.9'	9.4'	11.6'	15.0'	15.0'

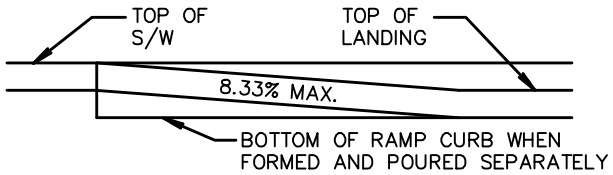

SECTION B-B

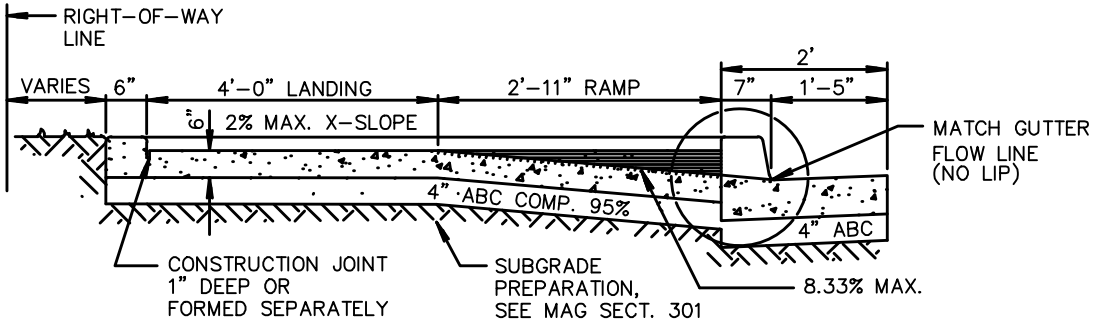

SECTION A-A

QUAD CITY STANDARD DETAIL	LOCAL STREET SIDEWALK RAMP	REVISED: 3/16	DETAIL No. 231Q

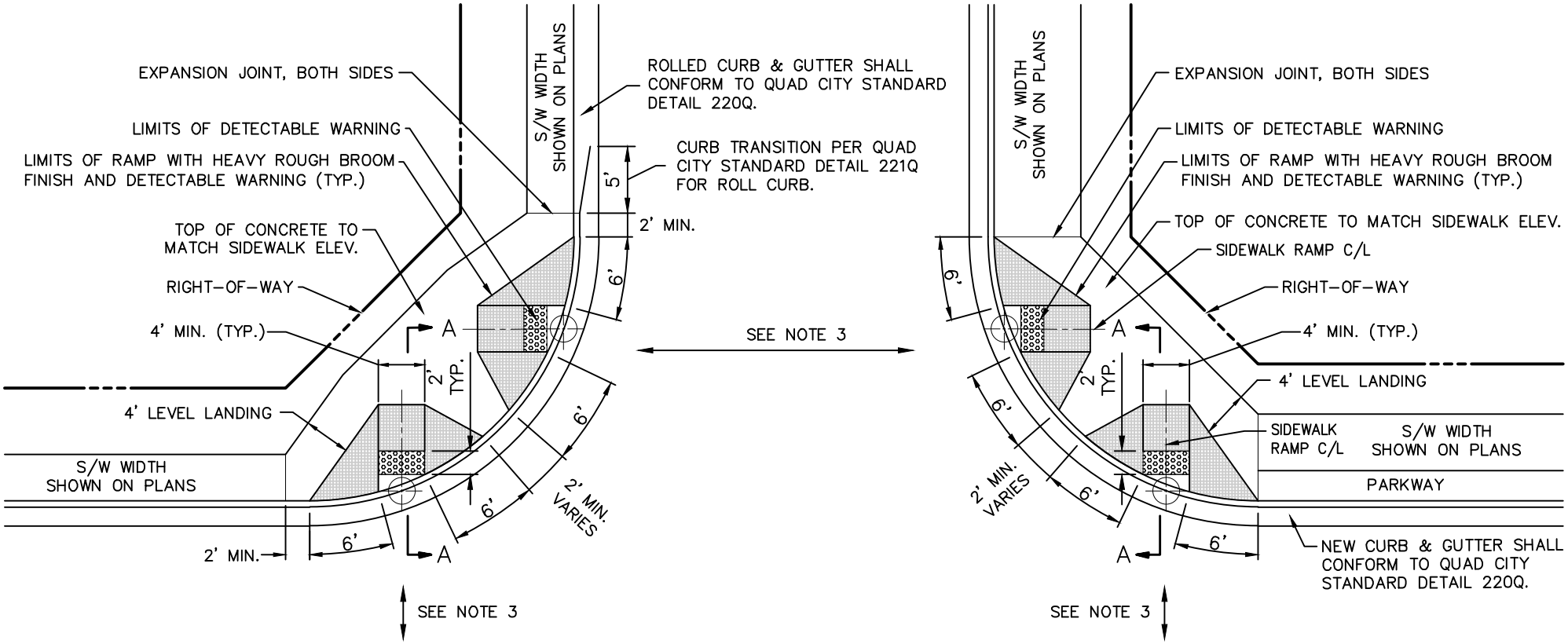

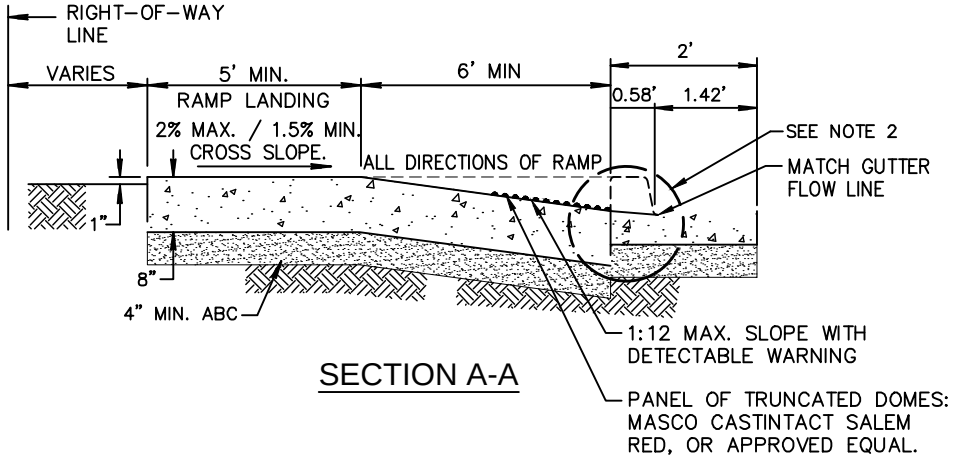

SECTION A-A

NOTES:

1. ALL CONCRETE TO BE CLASS "AA", MAG SECTION 725.
2. ALL RAMPS AND DETECTABLE WARNING SHALL BE ALIGNED IN THE DIRECTION OF PEDESTRIAN TRAVEL AND DIRECTED TOWARD RAMP ON OPPOSITE SIDE OF STREET.
3. THE USE OF ANY SIDEWALK RAMP OTHER THAN DIRECTIONAL SIDEWALK RAMPS ON COLLECTOR OR ARTERIAL STREETS REQUIRES APPROVAL FROM AGENCY ENGINEER.
4. SEE PLANS FOR LOCATION OF SIDEWALK RAMP CENTERLINE.
5. NO PORTION OF THE PEDESTRIAN ROUTE CROSSING THE STREET MAY EXCEED 2% CROSS SLOPE.
6. A MINIMUM OF 4" ABC COMPACTED TO 95% SHALL EXTEND TO BACK OF RAMP LANDING.

QUAD CITY STANDARD DETAIL	DIRECTIONAL SIDEWALK RAMPS	REVISED: 3/16	DETAIL No. 232Q

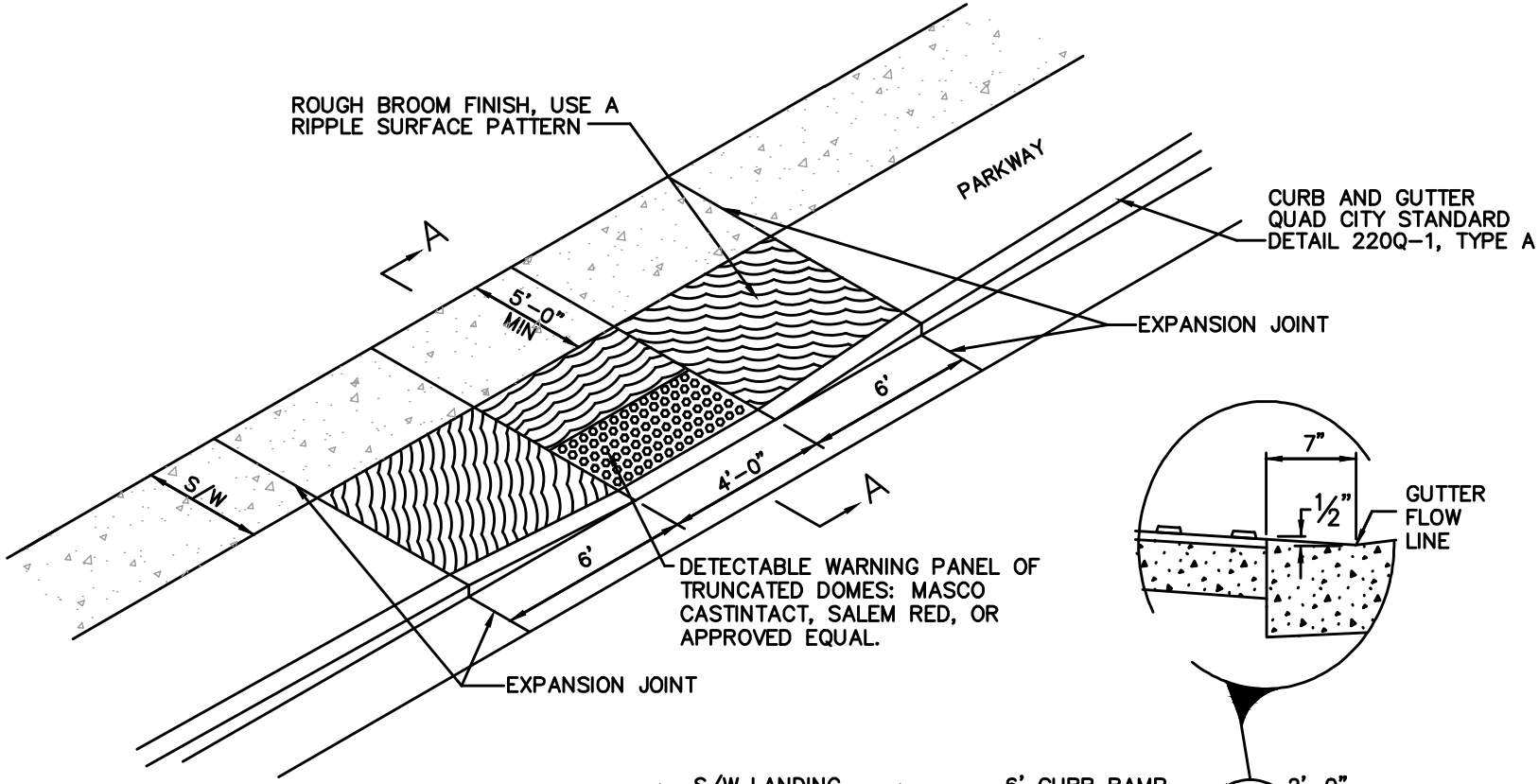

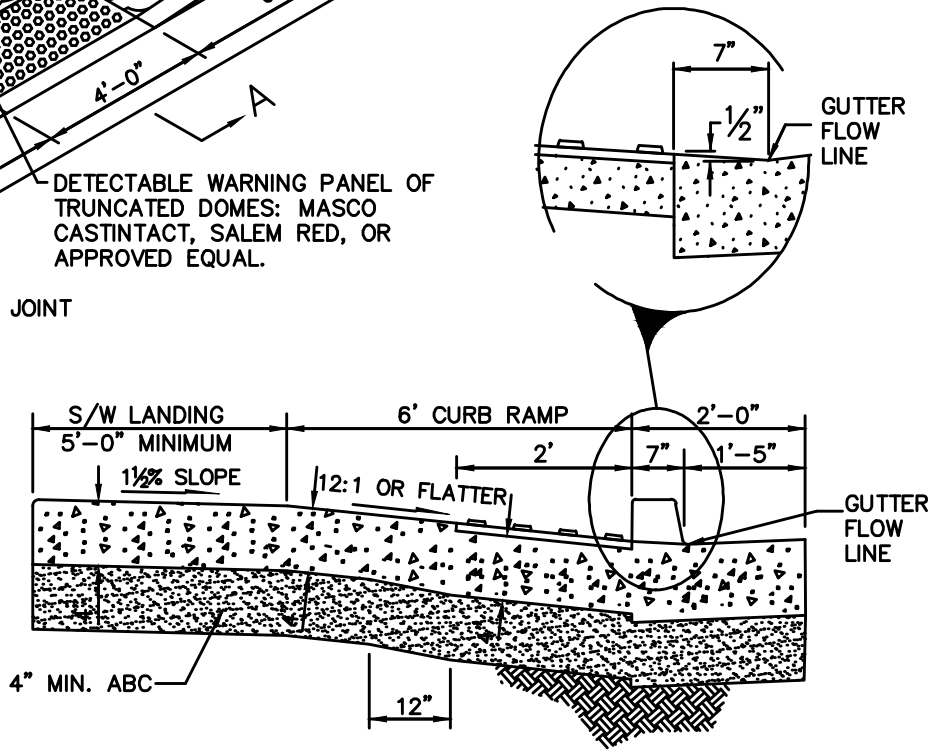

SECTION A–A

NOTES:

1. CLASS "AA" CONCRETE PER MAG SECTION 725.
2. EXPANSION JOINTS SHALL CONFORM TO MAG SECTION 340.
3. SIDEWALK SURFACE TO MATCH 1½ % SLOPE FROM TOP OF CURB.
4. DETAIL IS ADA COMPLIANT FOR $S_G \leq 2\%$.
5. A MINIMUM OF 4" ABC COMPACTED TO 95% PROCTOR SHALL EXTEND TO BACK OF RAMP LANDING.

QUAD CITY STANDARD DETAIL	MIDBLOCK DETACHED SIDEWALK RAMP	REVISED: 3/16	DETAIL No. 233Q-1

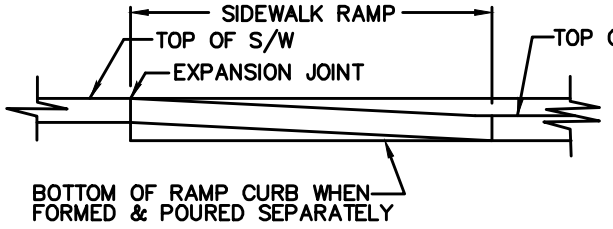

SECTION B-B

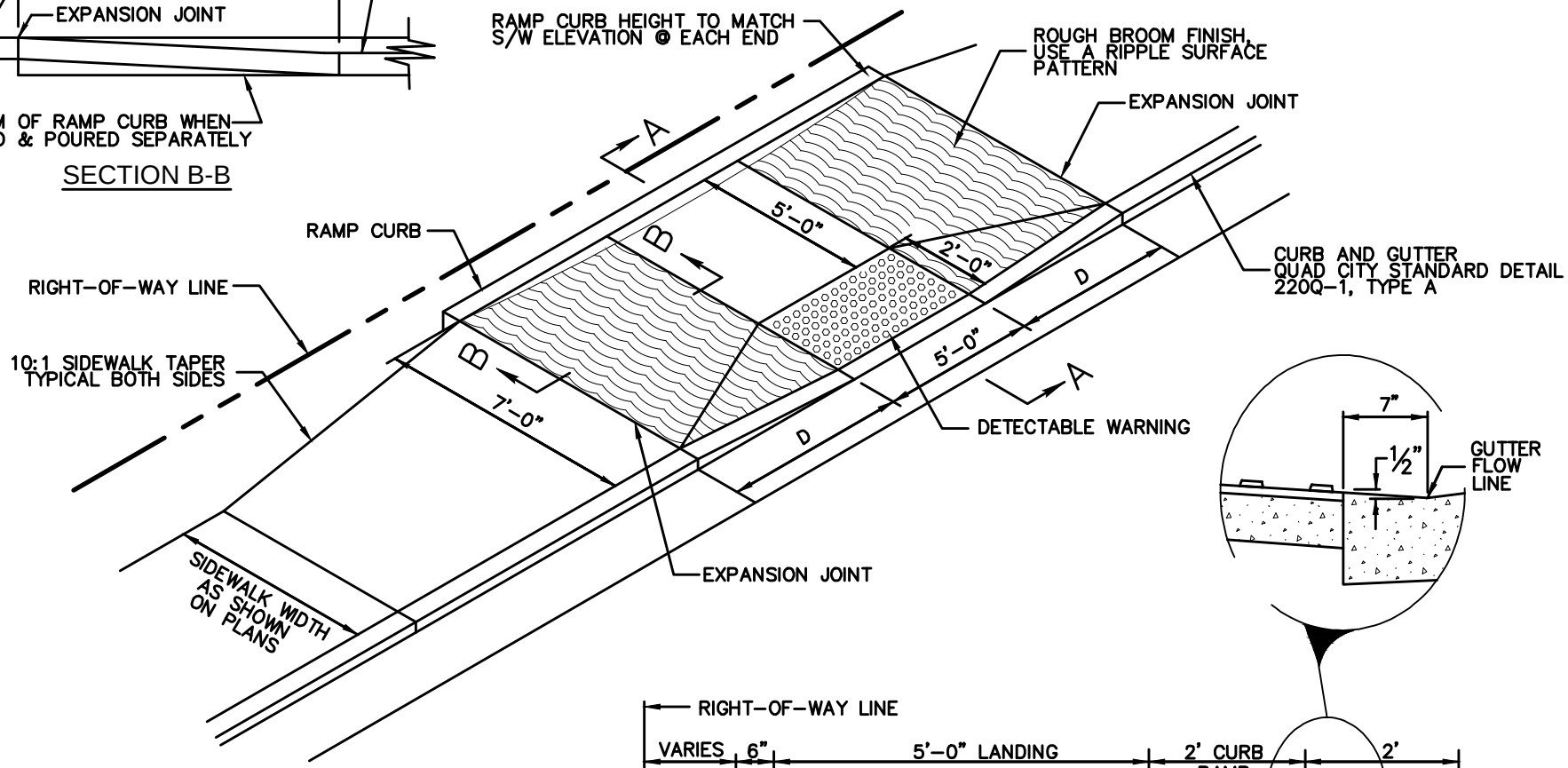

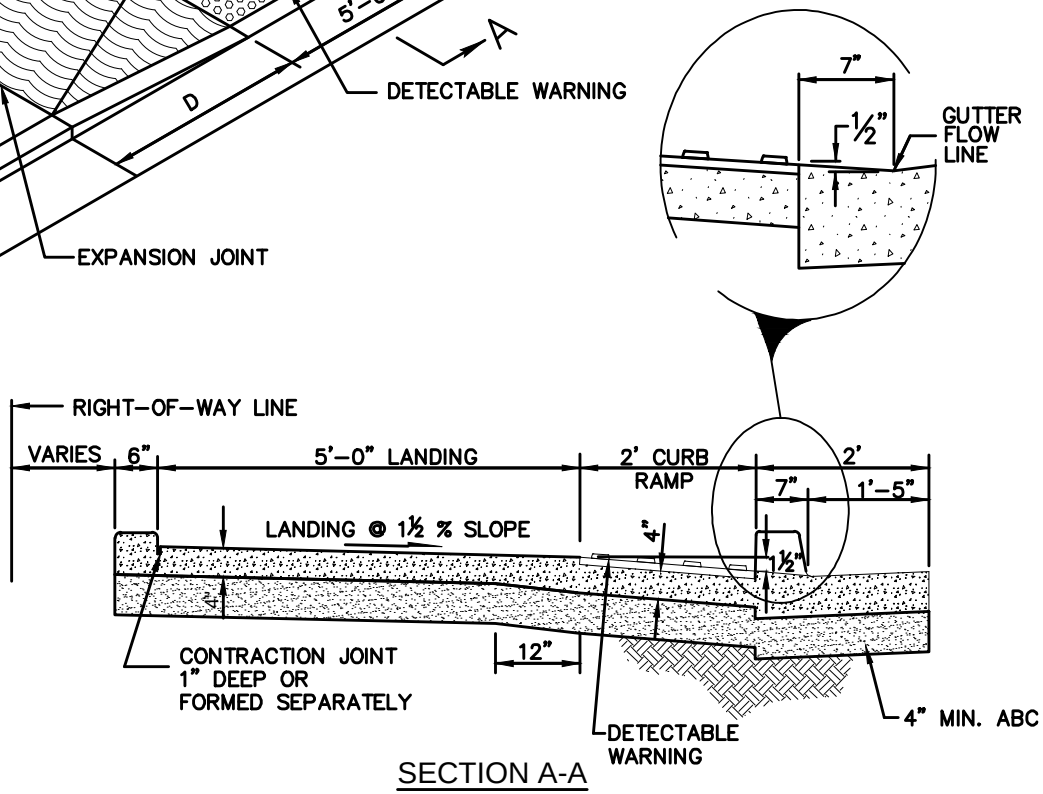

SECTION A-A

NOTES:

1. CLASS "AA" CONCRETE PER MAG SECTION 725.
2. EXPANSION JOINTS SHALL CONFORM TO MAG SECTION 340.
3. DETECTABLE WARNING PANEL OF TRUNCATED DOMES: MASCO CASTINTACT SALEM RED, OR APPROVED EQUAL.
4. DETAIL IS ADA COMPLIANT FOR $S_G \leq 2\%$.
5. A MINIMUM OF 4" ABC COMPACTED TO 95% PROCTOR SHALL EXTEND TO BACK OF RAMP LANDING.

QUAD CITY STANDARD DETAIL	MIDBLOCK ATTACHED SIDEWALK RAMP	REVISED: 3/16	DETAIL No. 233Q-2

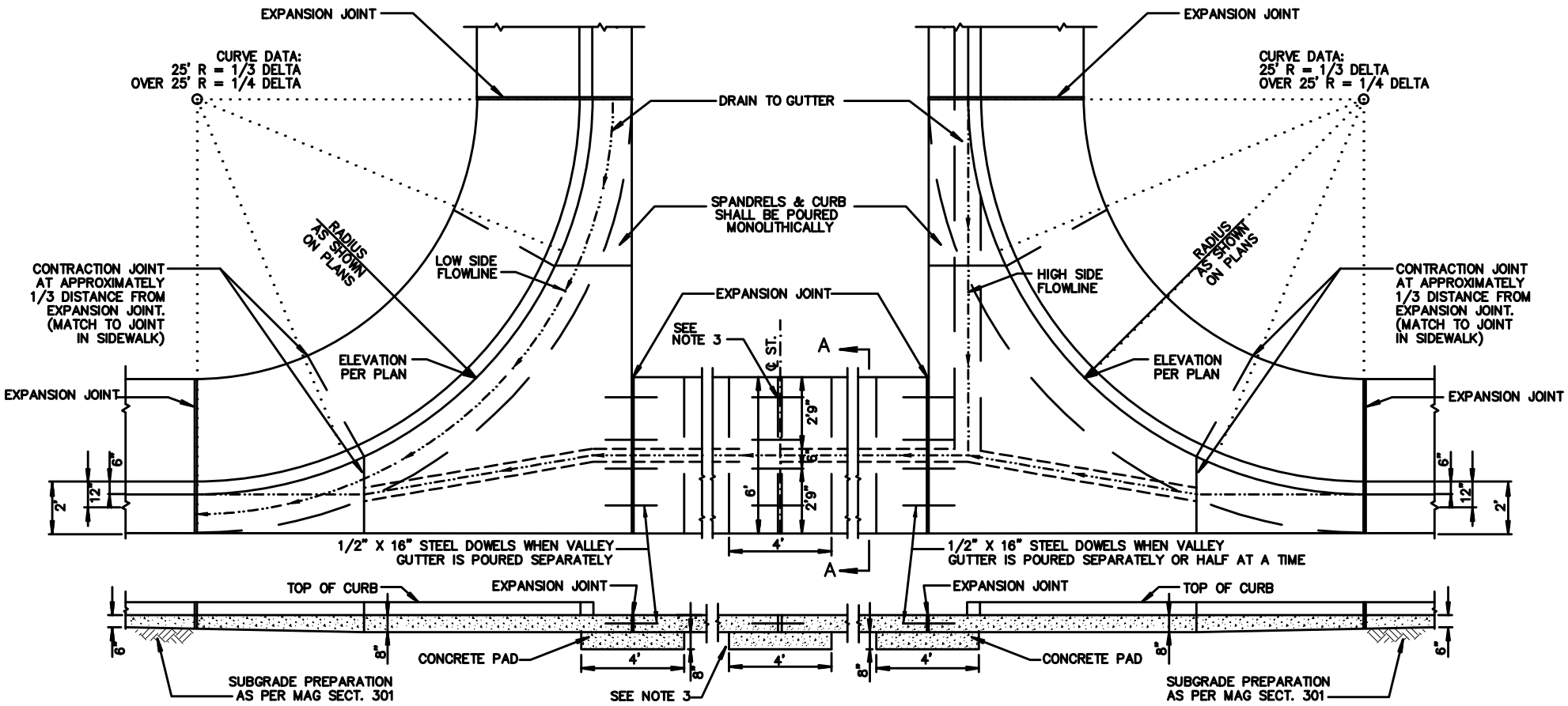

NOTES:

1. CONCRETE SHALL BE CLASS "AA" WITH 5%–7% ENTRAINED AIR PORTLAND CEMENT CONCRETE 600 LBS. WITH 3/4" AGGREGATE MAX., 4000 P.S.I. AT 28 DAYS & SHALL HAVE A SLUMP OF NOT MORE THAN 4 INCHES, PER MAG SECT. 340 & 725.
2. EITHER CONSTRUCTION JOINT OR CONTRACTION JOINT IS REQUIRED AT CENTERLINE OF STREET.
3. A SEPARATE CONCRETE PAD IS REQUIRED WHEN VALLEY GUTTER IS POURED SEPARATELY OR HALF AT A TIME.
4. EXPANSION JOINTS SHALL CONFORM TO MAG SECT. 340.
5. NO CONCRETE SHALL BE PLACED PRIOR TO FORM INSPECTION BY THE AGENCY ENGINEER OR DESIGNEE.
6. A MINIMUM OF 8" ABC (OR PER GEOTECH ANALYSIS) COMPACTED TO 95% PROCTOR SHALL EXTEND BELOW GUTTER & SPANDRELS.

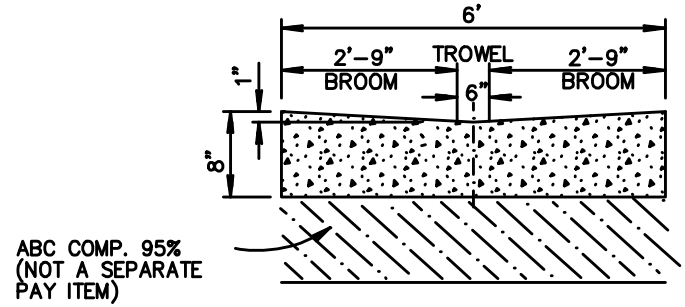

SECTION A–A
VALLEY GUTTER

QUAD CITY STANDARD DETAIL	6' VALLEY GUTTER & SPANDRELS	REVISED: 3/16	DETAIL No. 240Q-1

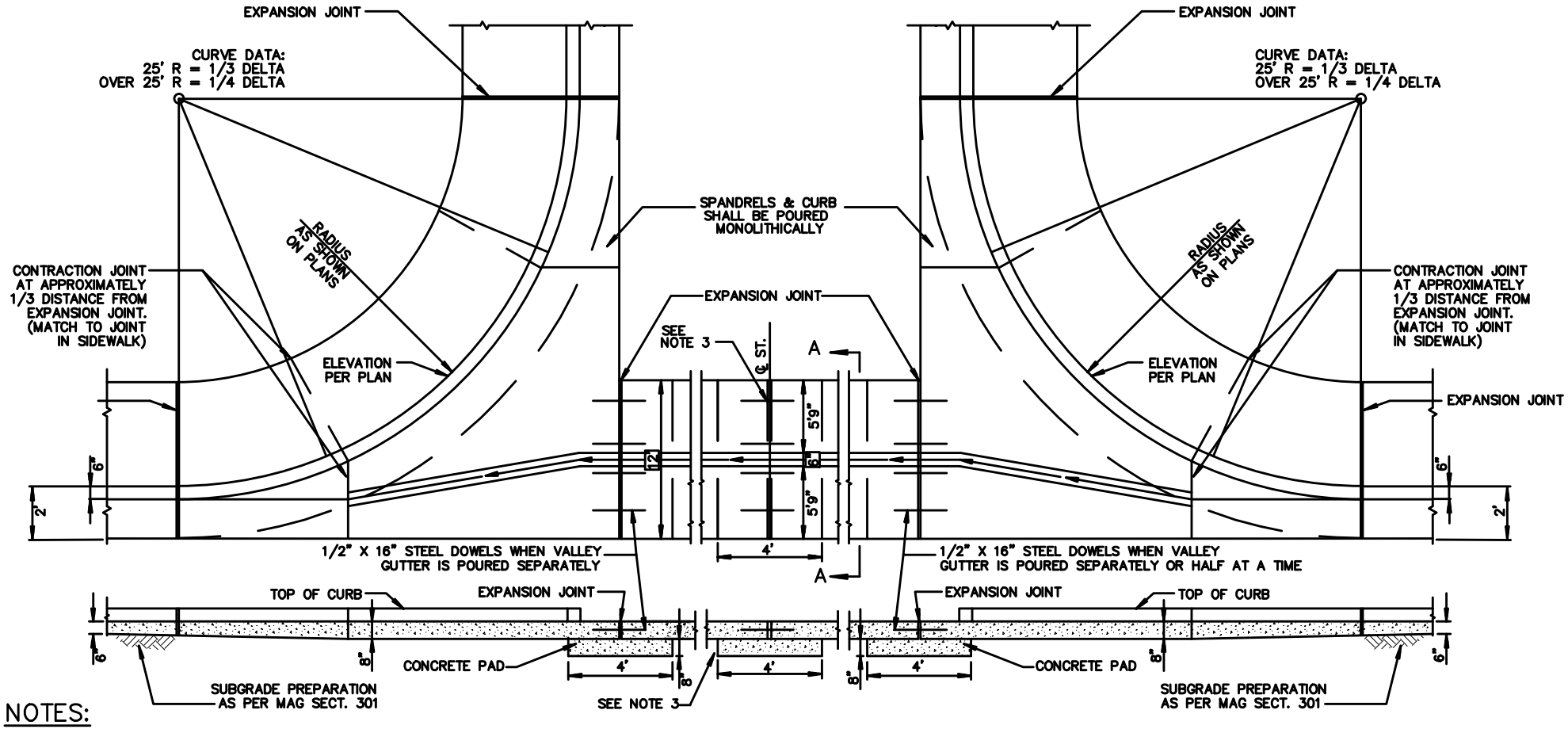

NOTES:

1. CONCRETE SHALL BE CLASS "AA" WITH 5% ± 1% ENTRAINED AIR PORTLAND CEMENT CONCRETE 600 LBS. WITH 3/4" AGGREGATE MAX., 4000 P.S.I. AT 28 DAYS & SHALL HAVE A SLUMP OF NOT MORE THAN 4 INCHES, PER MAG SECT. 340 & 725.
2. EITHER CONSTRUCTION JOINT OR CONTRACTION JOINT IS REQUIRED AT CENTERLINE OF STREET.
3. A SEPARATE CONCRETE PAD IS REQUIRED WHEN VALLEY GUTTER IS POURED SEPARATELY OR HALF AT A TIME.
4. EXPANSION JOINTS SHALL CONFORM TO MAG SECT. 340.
5. NO CONCRETE SHALL BE PLACED PRIOR TO FORM INSPECTION BY THE AGENCY ENGINEER OR DESIGNEE.
6. A MINIMUM OF 8" ABC (OR PER GEOTECH ANALYSIS) COMPACTED TO 95% PROCTOR SHALL EXTEND BELOW GUTTER AND SPANDRELS.

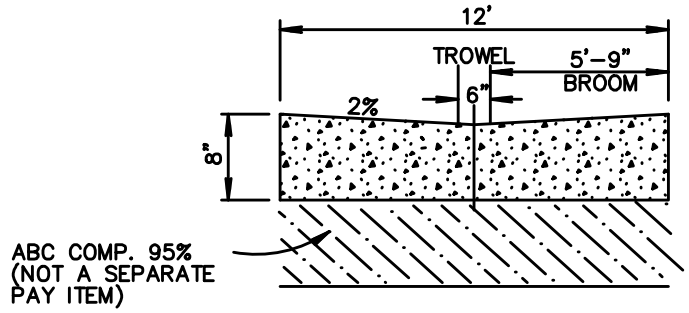

SECTION A–A
VALLEY GUTTER

QUAD CITY STANDARD DETAIL	12' VALLEY GUTTER & SPANDRELS	REVISED: 3/16	DETAIL No. 240Q-2

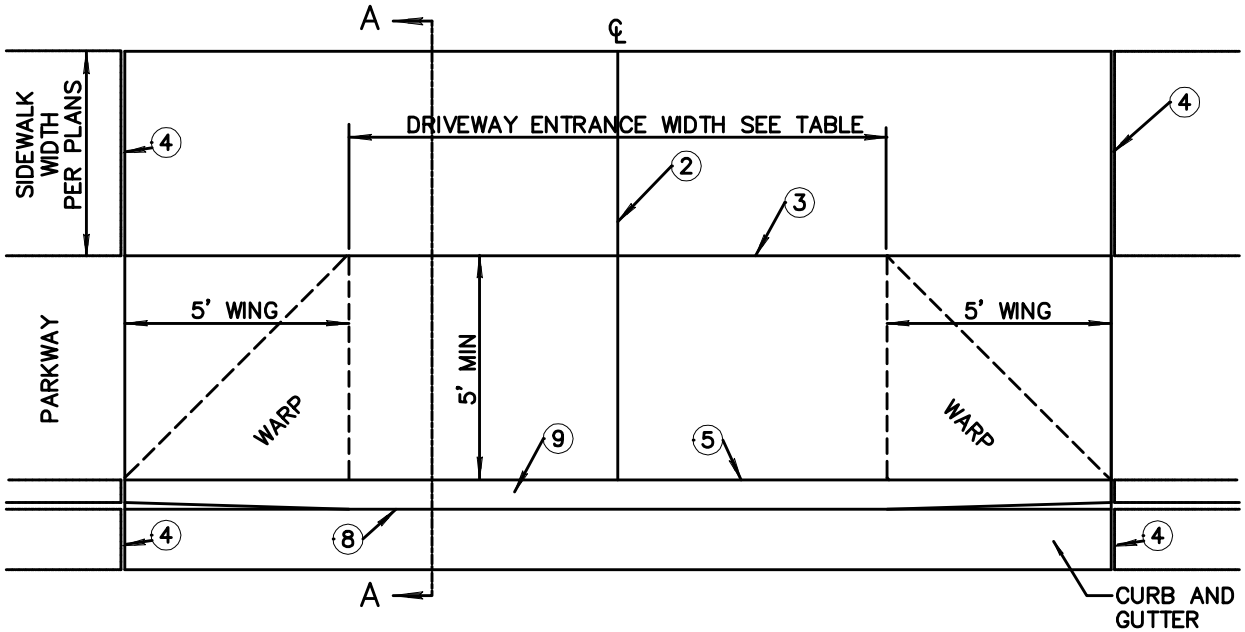

DRIVEWAY WITH DETACHED SIDEWALK

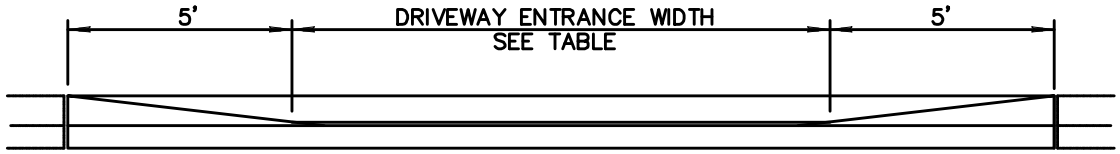

NOTES:

1. DEPRESSED CURB SHALL BE PAID FOR AT THE CONTRACT UNIT PRICE FOR THE TYPE OF CURB USED AT THAT LOCATION.
2. CONTRACTION JOINT ON D/W CENTERLINE.
3. CONTRACTION JOINT.
4. 1/2-INCH EXPANSION JOINTS SHALL COMPLY WITH MAG SECTION 340.
5. BACK OF CURB – CONSTRUCTION JOINT.
6. CLASS "AA" CONCRETE PER MAG SECTION 725.
7. SUBGRADE PREPARATION, MAG SECT. 301.
8. FLOW LINE OF GUTTER.
9. DEPRESSED CURB.
10. SECT. A–A AND ELEVATION: D/W SHOWN WITH VERTICAL CURB AND GUTTER, ROLL TYPE CURB AND GUTTER TREATED SIMILARLY.
11. ROUGH BROOM FINISH FULL WIDTH OF RAMP AND WINGS.
12. TROWEL AND USE LIGHT HAIR BROOM FINISH FOR WALKWAY AREA.
13. ELEVATION AT TOP OF DRIVEWAY RAMP SHALL BE EQUAL TO OR HIGHER THAN NORMAL CURB ELEVATION.

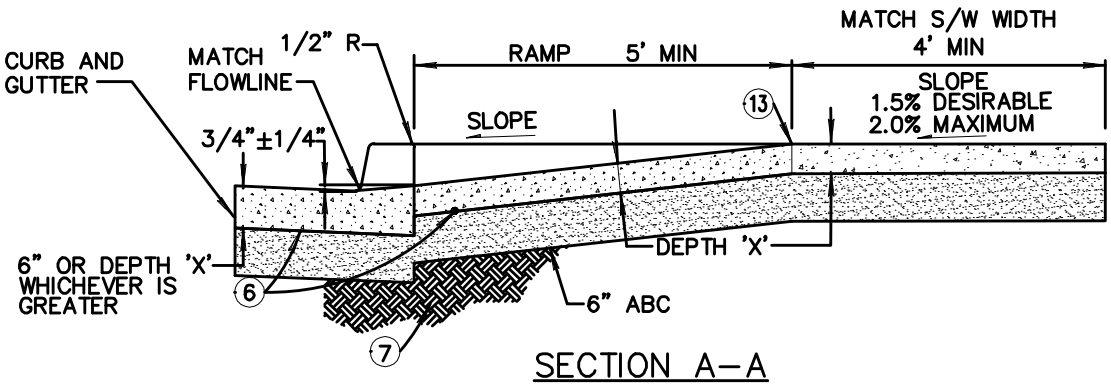

SECTION A–A

COMMERCIAL AND INDUSTRIAL				
DRIVEWAY ENTRANCE WIDTH	MIN.	MAX.	CLASS	DEPTH 'X'
COMMERCIAL	✹ 16'	40'	A	9"
INDUSTRIAL	✹ 16'	40'	A	9"
✹24' MIN. FOR TWO WAY TRAFFIC				

RESIDENTIAL				
DRIVEWAY ENTRANCE WIDTH	MIN.	MAX.	CLASS	DEPTH 'X'
ARTERIAL STREET	16'	30'	A	6"
COLLECTOR STREET	* 12'	30'	A	6"
LOCAL STREET	12'	30'	A	6"
*16' DESIRABLE				

QUAD CITY STANDARD DETAIL	DRIVEWAY ENTRANCE WITH DETACHED SIDEWALKS	REVISED: 3/16	DETAIL No. 250Q-1

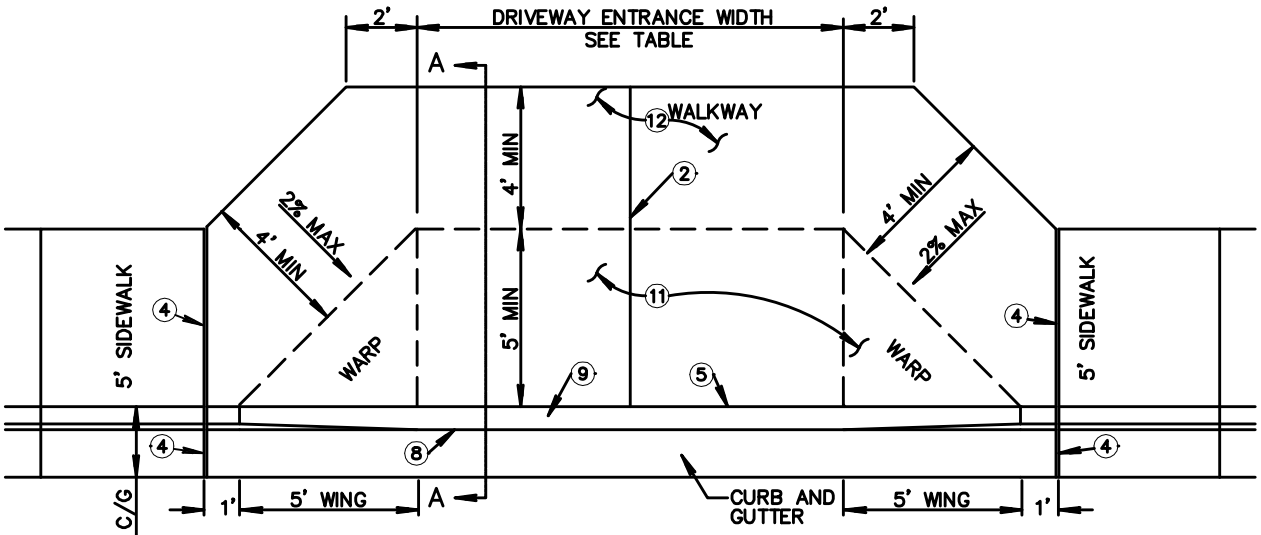

DRIVEWAY WITH SIDEWALK ATTACHED TO CURB

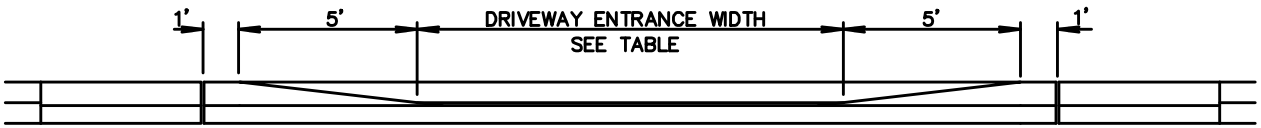

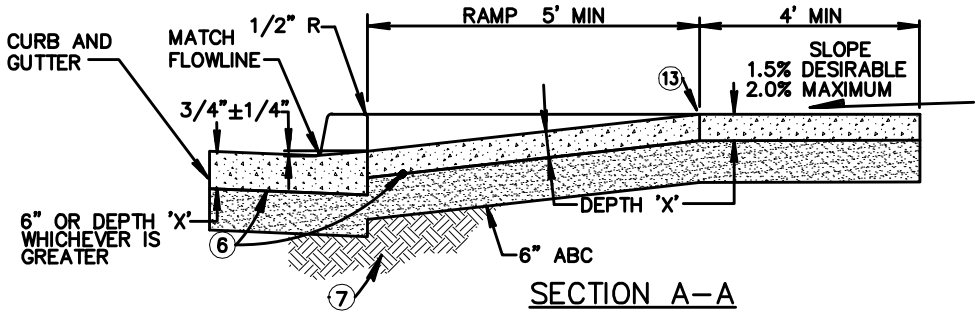

SECTION A–A

NOTES:

1. DEPRESSED CURB SHALL BE PAID FOR AT THE CONTRACT UNIT PRICE FOR THE TYPE OF CURB USED AT THAT LOCATION.
2. CONTRACTION JOINT(S) FOR DRIVEWAY ENTRANCE: WIDTH LESS THAN 22' NONE REQUIRED; WIDTH GREATER THAN 22' AND LESS THAN 30' LOCATE SINGLE JOINT ON D/W CENTERLINE; WIDTH OF 30' OR GREATER LOCATE TWO JOINTS TO EQUALLY DIVIDE THE DRIVEWAY ENTRANCE WIDTH.
3. DETAIL GEOMETRICS ARE BASED ON A CURB HEIGHT OF SIX INCHES (6"), AN ATTACHED SIDEWALK WIDTH OF FIVE FEET (5'), AND A DRIVEWAY RAMP LENGTH NOT EXCEEDING SIX FEET (6'). GEOMETRIC MODIFICATIONS MAY BE REQUIRED WHEN CONDITIONS ARE MODIFIED.
4. 1/2–INCH EXPANSION JOINTS SHALL COMPLY WITH MAG SECTION 340.
5. BACK OF CURB – CONSTRUCTION JOINT.
6. CLASS "AA" CONCRETE PER MAG SECTION 725.
7. SUBGRADE PREPARATION, MAG SECT. 301.
8. FLOW LINE OF GUTTER.
9. DEPRESSED CURB.
10. SECT. A–A AND ELEVATION: D/W SHOWN WITH VERTICAL CURB AND GUTTER, ROLL TYPE CURB AND GUTTER TREATED SIMILARLY.
11. ROUGH BROOM FINISH FULL WIDTH OF RAMP AND WINGS.
12. TROWEL AND USE LIGHT HAIR BROOM FINISH FOR WALKWAY AREA.
13. ELEVATION AT TOP OF DRIVEWAY RAMP SHALL BE EQUAL TO OR HIGHER THAN NORMAL CURB ELEVATION.

COMMERCIAL AND INDUSTRIAL					RESIDENTIAL				
DRIVEWAY ENTRANCE WIDTH	MIN.	MAX.	CLASS	DEPTH 'X'	DRIVEWAY ENTRANCE WIDTH	MIN.	MAX.	CLASS	DEPTH 'X'
COMMERCIAL	✱ 16'	40'	A	9"	ARTERIAL STREET	16'	30'	A	6"
INDUSTRIAL	✱ 16'	40'	A	9"	COLLECTOR STREET	* 12'	30'	A	6"
✱24' MIN. FOR TWO WAY TRAFFIC					LOCAL STREET	12'	30'	A	6"
					*16' DESIRABLE				

QUAD CITY STANDARD DETAIL	DRIVEWAY ENTRANCE WITH SIDEWALK ATTACHED TO CURB	REVISED: 3/16	DETAIL No. 250Q-2

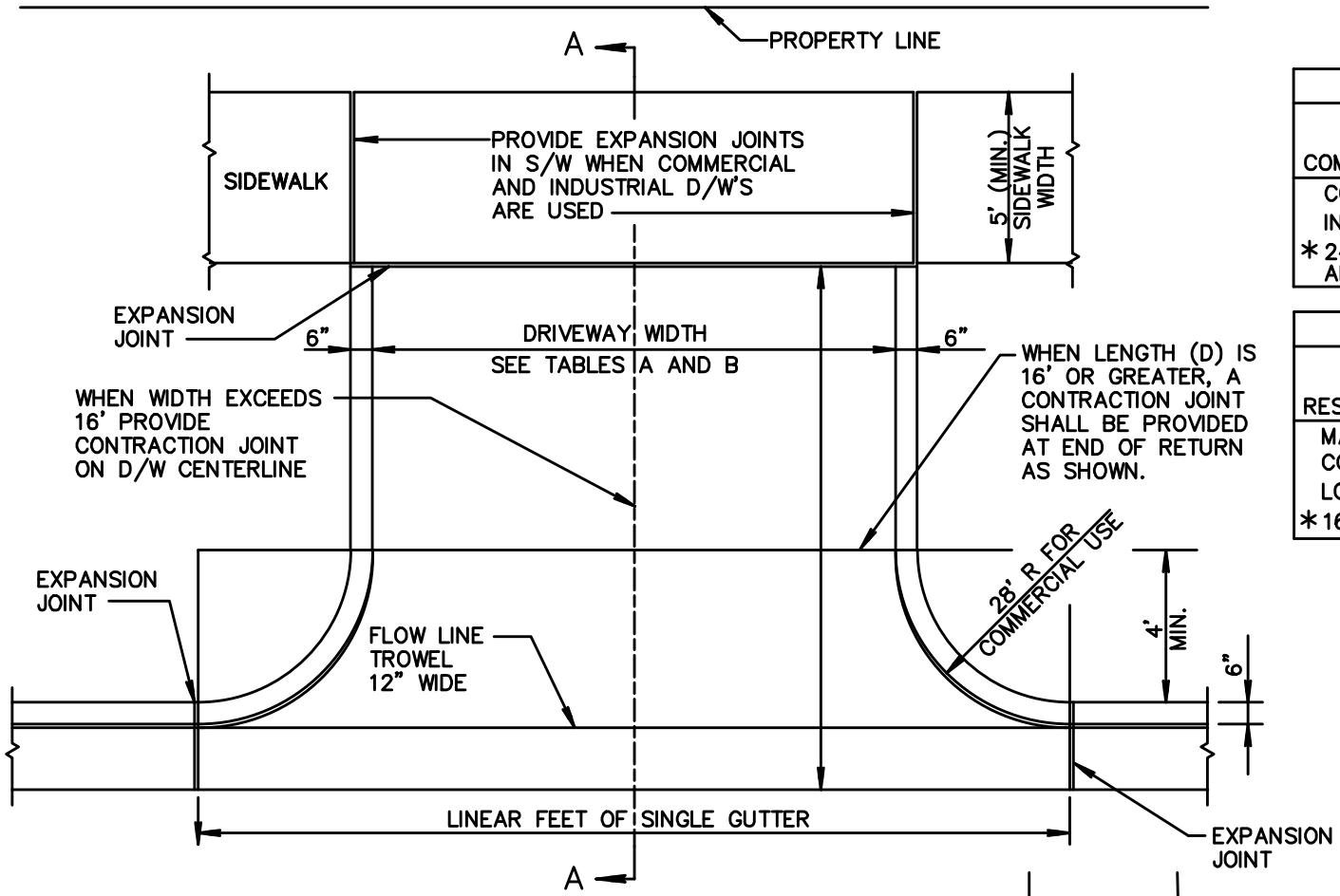

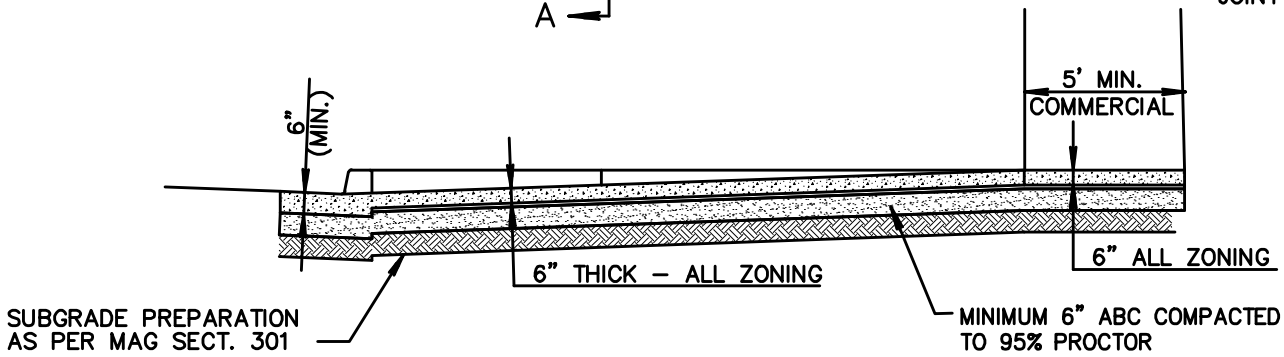

SECTION A–A

TABLE A		
ZONING	DRIVEWAY WIDTH	
COMMERCIAL AND INDUSTRIAL	MIN.*	MAX.
COMMERCIAL	16'	40'
INDUSTRIAL	16'	40'
* 24' WHERE 2–WAY TRAFFIC IS ANTICIPATED		

TABLE B		
ZONING	DRIVEWAY WIDTH	
RESIDENTIAL	MIN.*	MAX.
MAJOR STREET	16'	30'
COLLECTOR STREET	12'	30'
LOCAL STREET	12'	30'
* 16' WIDTH IS DESIRABLE		

NOTES:

1. EXPANSION JOINTS SHALL COMPLY TO MAG SECTION 340.
2. THIS TYPE D/W TO BE USED ONLY UPON APPROVAL OF ENGINEER.
3. CLASS "AA" CONCRETE CONSTRUCTION AS PER MAG SECTION 725.
4. SUBGRADE TO BE COMPACTED TO 95% OF MAX PER MAG SECTION 301

QUAD CITY STANDARD DETAIL	RETURN TYPE DRIVEWAY	REVISED: 3/16	DETAIL No. 251Q

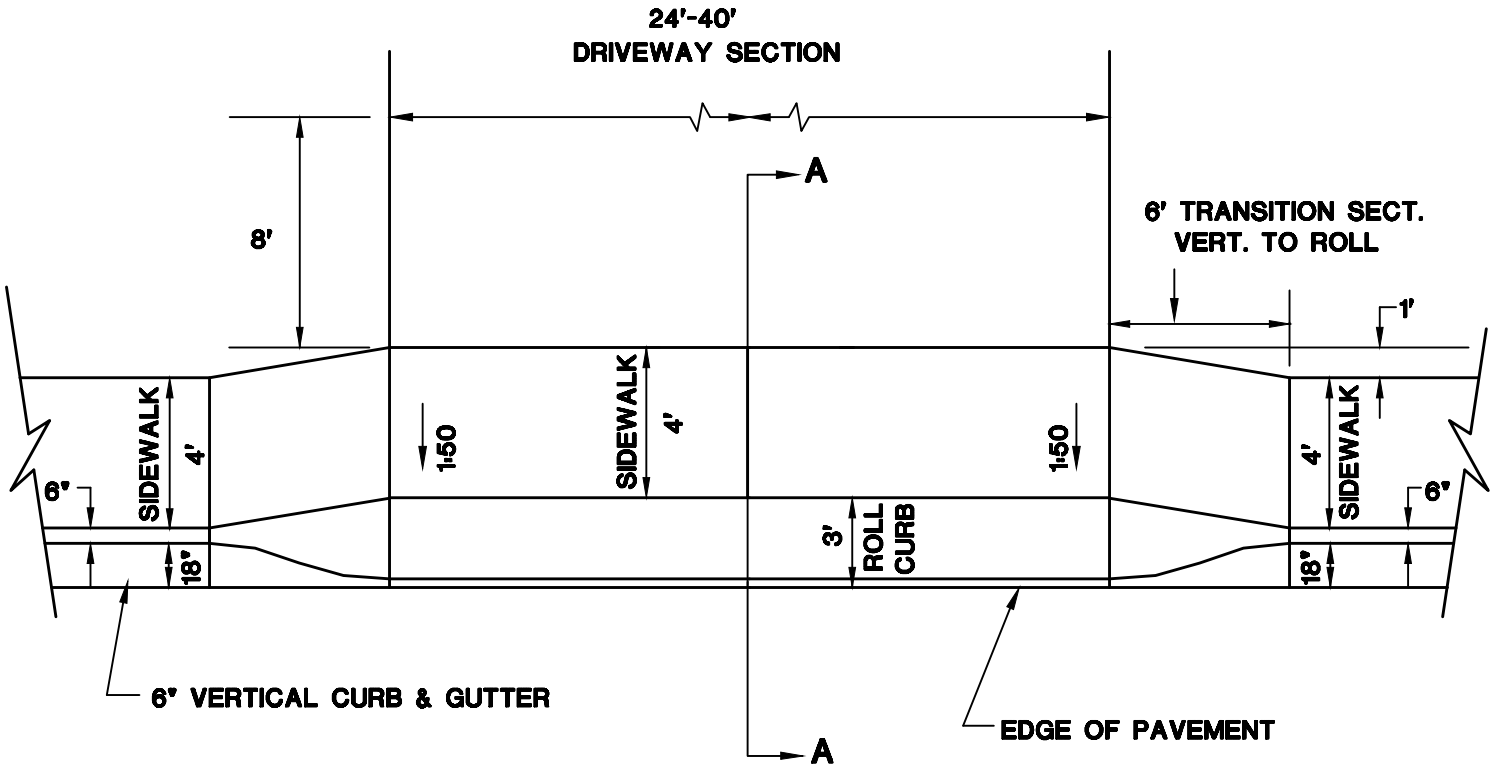

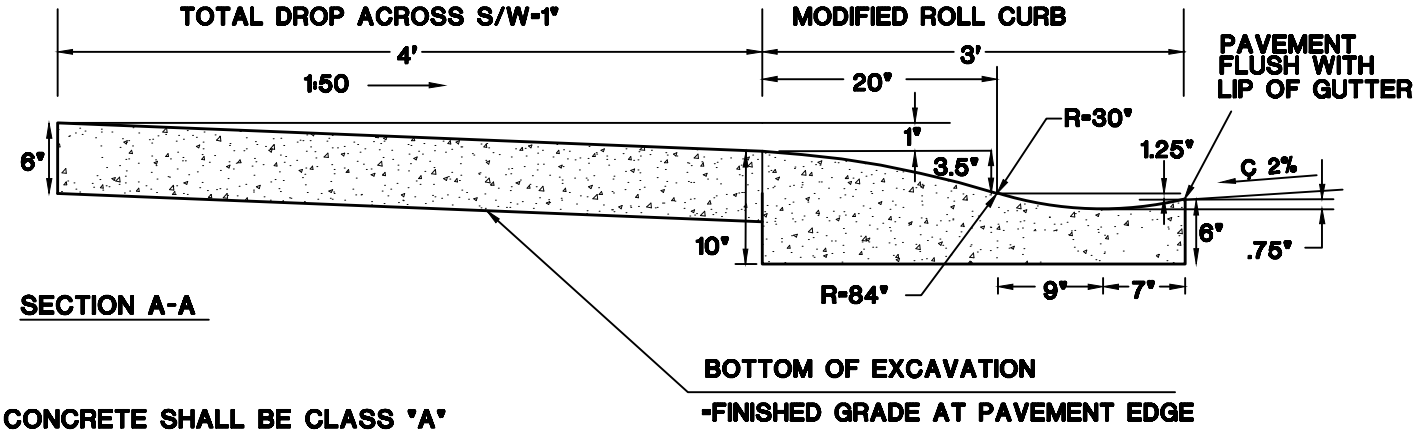

NOTE: ALL CONCRETE SHALL BE CLASS "A"

PV STANDARD DETAIL	3' ROLL CURB DRIVEWAY	TOWN ENGINEER	REVISED: 3/16	DETAIL No. 251PV-2

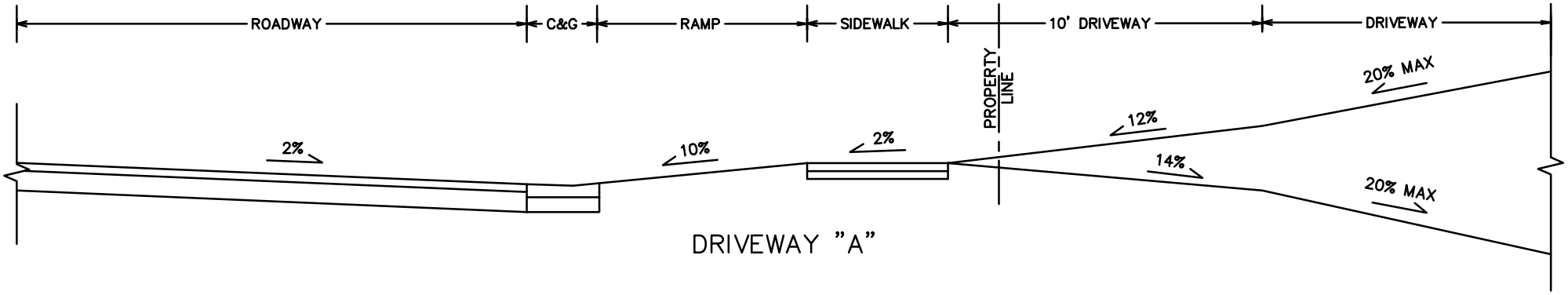

DRIVEWAY "A"

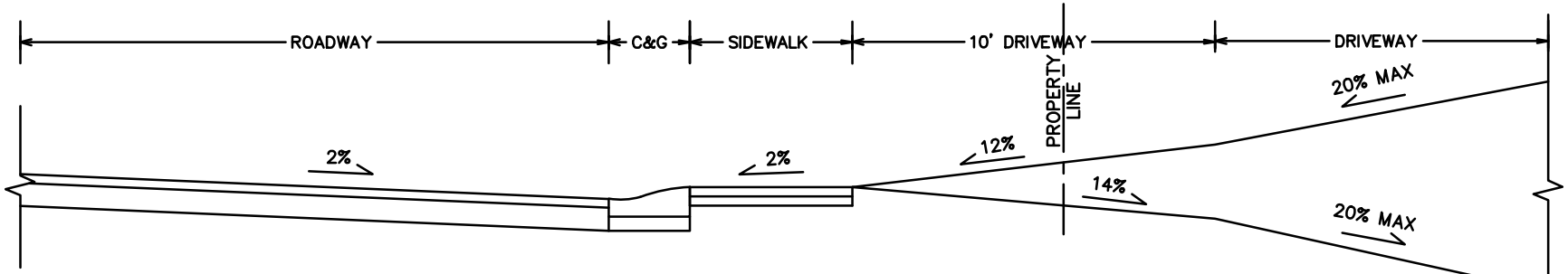

DRIVEWAY "B"

NOTE:

ALL SLOPE PERCENTAGES ARE THE MAXIMUM ALLOWED.

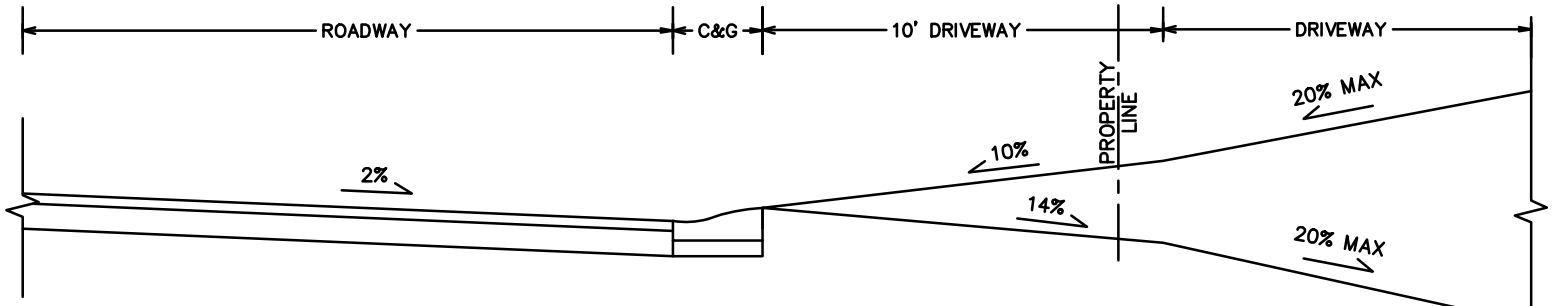

DRIVEWAY "C"

COP STANDARD DETAIL	RESIDENTIAL DRIVEWAY SECTION	CITY ENGINEER	REVISED: 05/15	DETAIL No. 255P

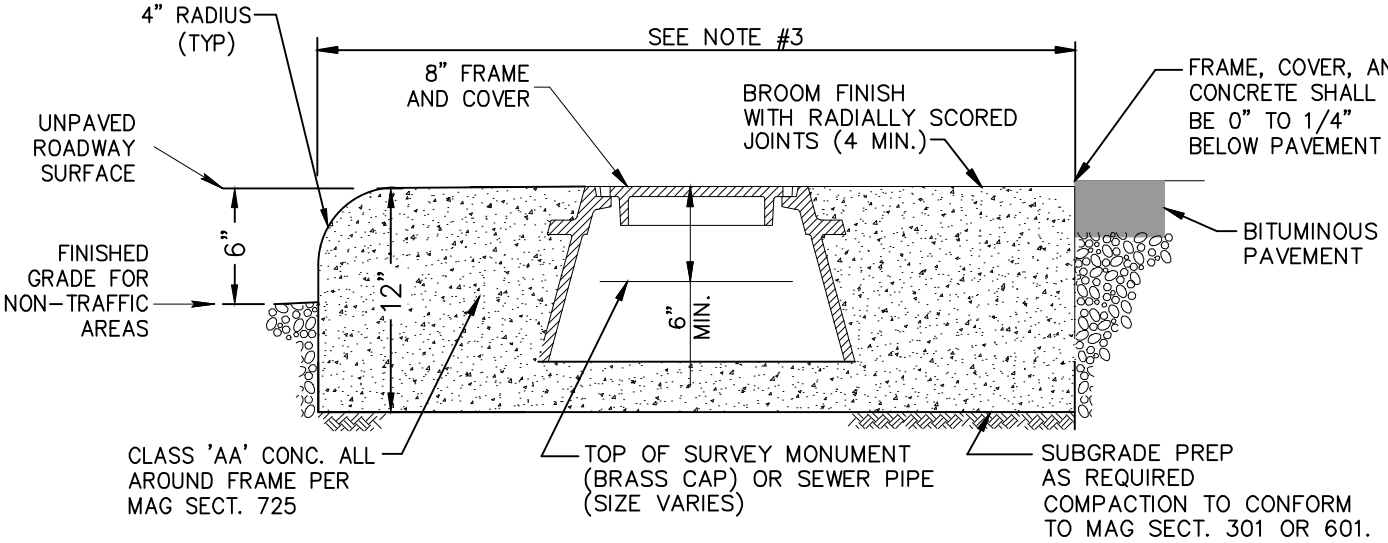

SURVEY MONUMENT OR SEWER
CLEAN OUT FRAME & GRADE ADJUSTMENT

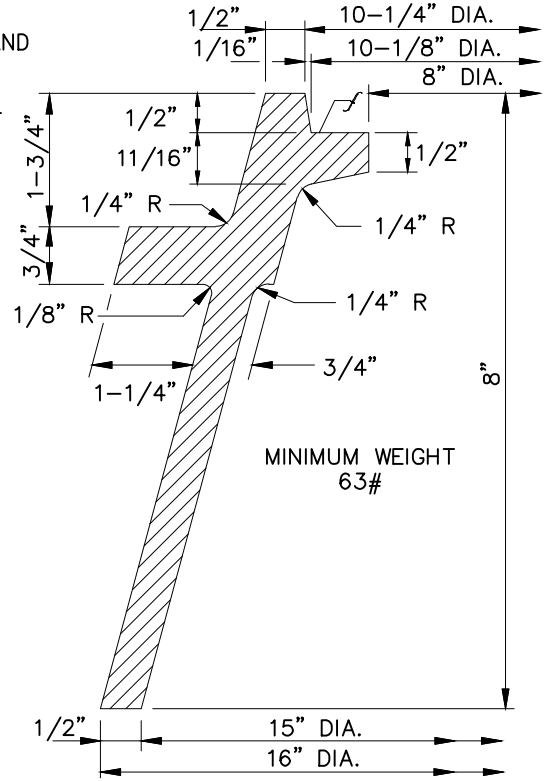

8" C.I. FRAME AND COVER

NOTES:

1. LETTERS ON COVER TO BE AS FOLLOWS: "SEWER", "PRIVATE SEWER", OR "SURVEY" AS DIRECTED TOTAL WIDTH OF WORD "SEWER" 3-3/4". TOTAL WIDTH OF WORD "SURVEY" 4-1/2". LETTER SIZE 5/8" x 3/4", RAISED 1/16" ABOVE LEVEL OF COVER, TYPE OF LETTERS TO BE SUBMITTED FOR APPROVAL.
2. U.S. MANUFACTURED IRON ONLY.
3. CONCRETE COLLAR SHALL BE 40" DIAMETER IN VEHICULAR TRAFFIC AREAS INCLUDING ALL EASEMENTS, AND 24" DIAMETER IN NON TRAFFIC AREAS.

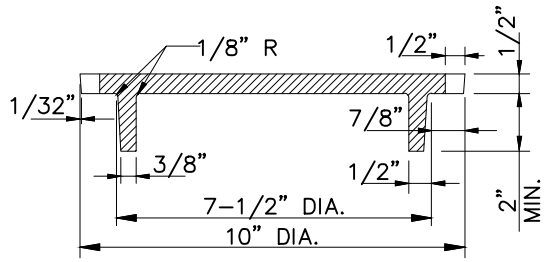

COVER SECTION A-A

DETAIL TYPICAL FOR BOTH FRAME AND COVER

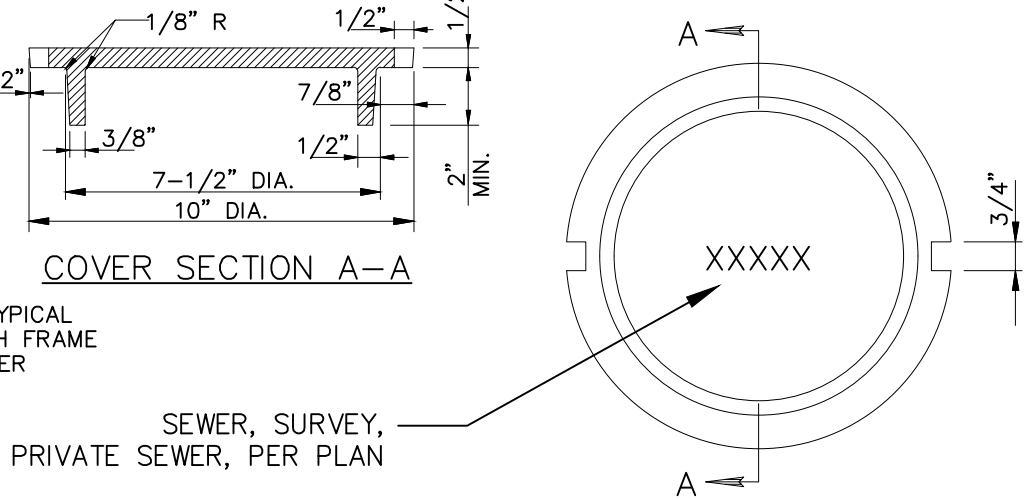

QUAD CITY STANDARD DETAIL	8" FRAME AND COVER	REVISED: 3/16	DETAIL No. 270Q

CARRIER PIPE SIZE (IN)	STEEL ENCASEMENT O.D. (IN MIN)	STEEL ENCASEMENT WALL THICKNESS (IN)
6	14	1/4
8	18	1/4
12	21	1/4
18	27	3/8
21	30	3/8
24	36	3/8
27	39	1/2

1. FOR ALL CARRIER PIPE OVER 27" THE STEEL ENCASEMENT PIPE SHALL BE 12" LARGER THAN THE CARRIER PIPE AND THE STEEL ENCASEMENT WALL THICKNESS SHALL BE 1/2"

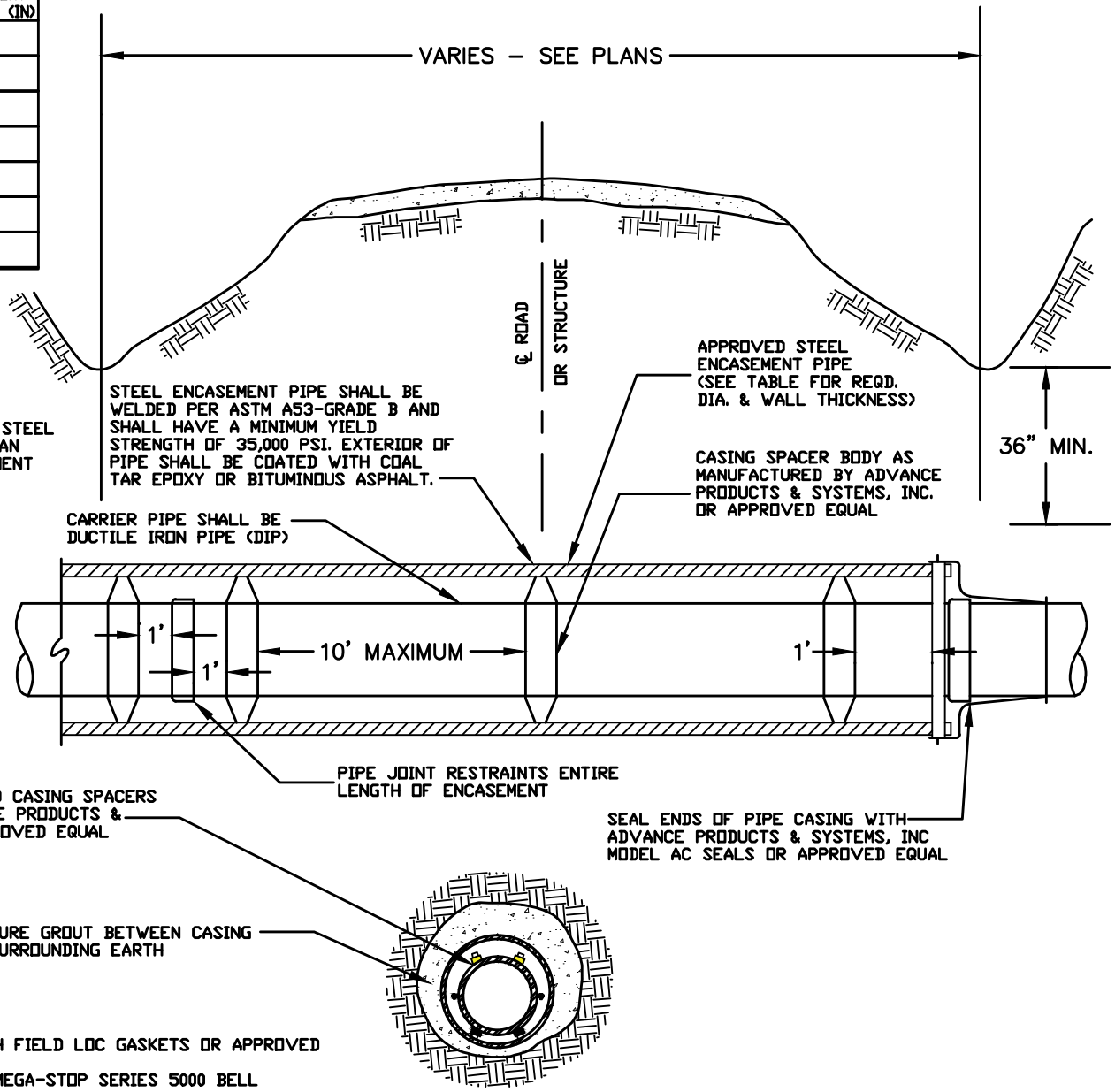

END VIEW

NOTES:
1. ALL FITTINGS SHALL BE RESTRAINED WITH FIELD LOC GASKETS OR APPROVED EQUAL
2. ALL BELLS SHOULD BE PROTECTED WITH MEGA-STOP SERIES 5000 BELL PROTECTION OR APPROVED EQUAL.
3. 1' MAXIUMUM BETWEEN SPACERS AND CASING PIPE
4. INSTALLATION SHALL BE IN ACCORDANCE WITH ADVANCE PRODUCTS & SYSTEMS, INC. RECOMENDATIONS OR APPROVED EQUAL.
5. TRACE WIRE PER AGENCY SPECIFICATIONS.
6. NO PIPE SHALL BE SUPPORTED BY BELL

QUAD CITY STANDARD DETAIL	UTILITY CASING	REVISED: 3/16	DETAIL No. 275Q

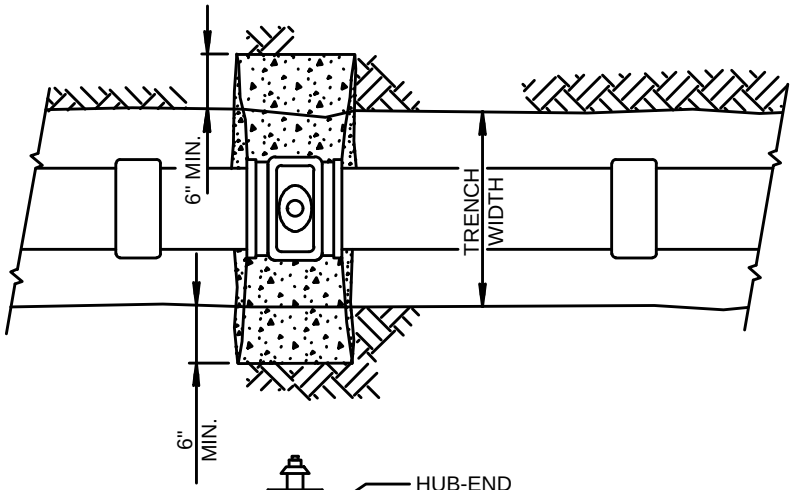

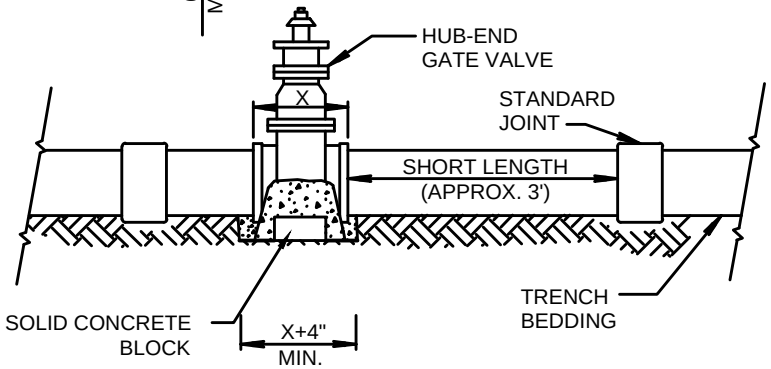

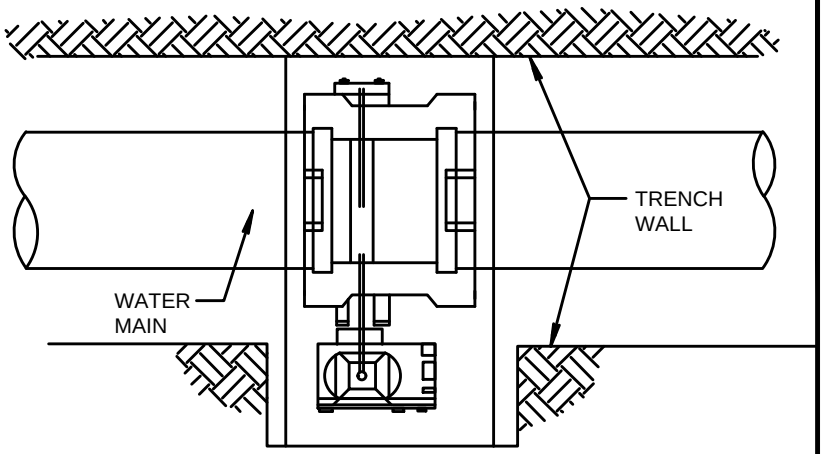

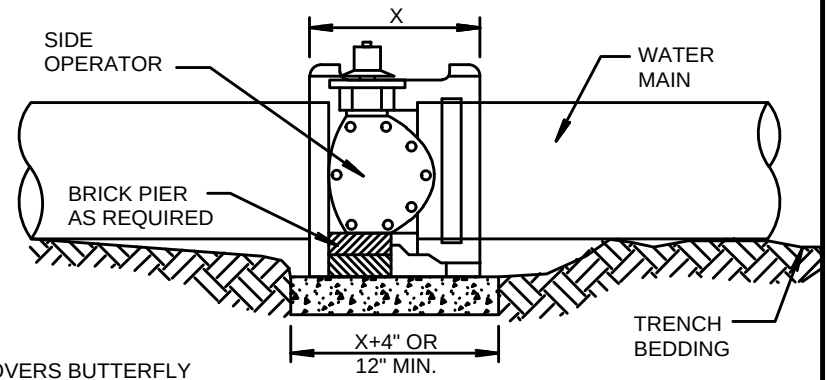

THIS DETAIL COVERS BUTTERFLY VALVE & HORIZONTALLY OPERATED GATE VALVE INSTALLATION, REGARDLESS OF TYPE OF PIPE OR JOINT USED.

THIS DETAIL COVERS RESILIENT SEATED GATE VALVES, REGARDLESS OF TYPE OF PIPE USED.

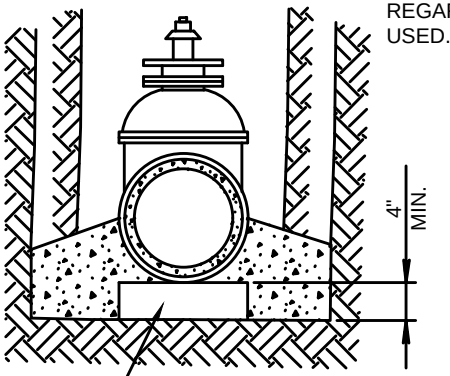

GATE VALVE

NOTES:

1. REFER TO APPROPRIATE AGENCY FOR VALVE BOX, COVER AND VALVE STABILIZER REQUIREMENTS.
2. ALL BOLTS AND JOINTS SHALL BE FREE AND CLEAR OF CONCRETE.
3. PROTECT ALL CONCRETE CONTACT AREAS WITH 8 MIL SHEET PLASTIC.
4. CLASS "B" CONCRETE AS PER MAG SECT. 725. FORM AS REQUIRED TO KEEP CLEAR OF JOINTS.

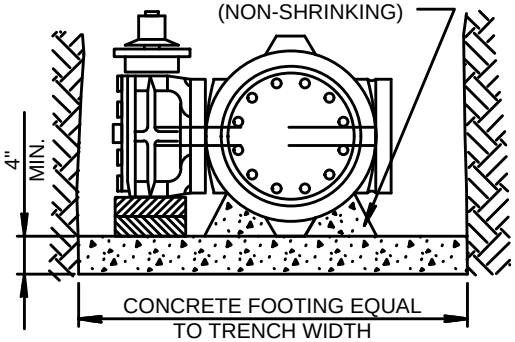

BUTTERFLY VALVE

QUAD CITY STANDARD DETAIL	VALVE BLOCKING	REVISED: 3/16	DETAIL No. 301Q

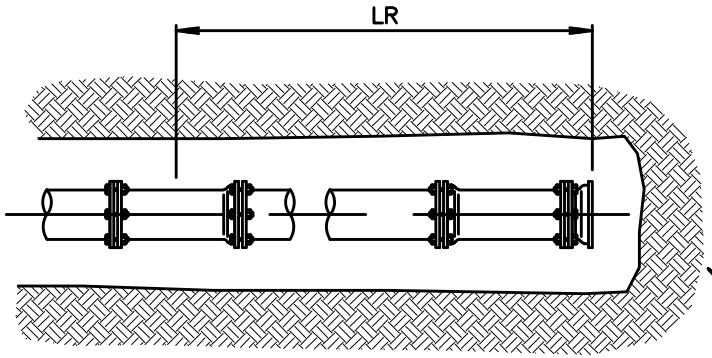

DEAD ENDS

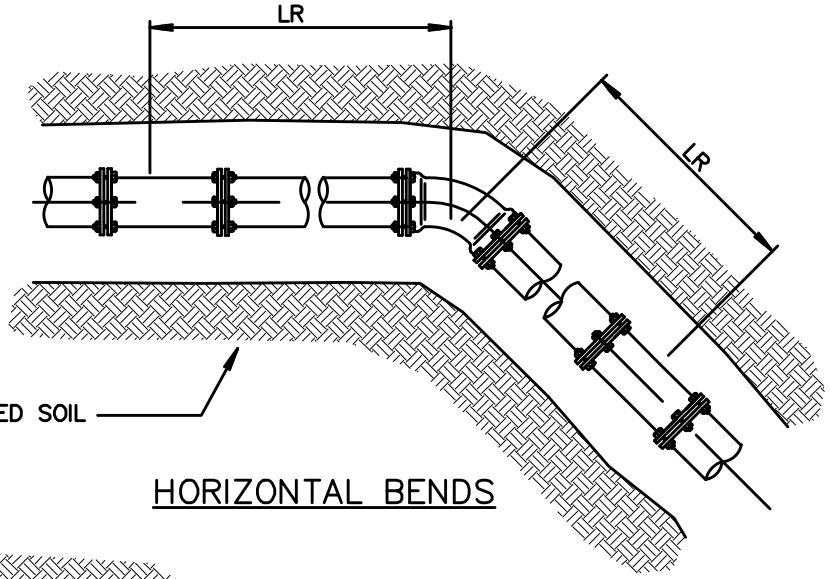

HORIZONTAL BENDS

UNDISTURBED SOIL

LRN = SHORTEST LENGTH OF PIPE RESTRAINED TO THE RUN OF THE TEE FITTING (BOTH SIDES OF TEE).

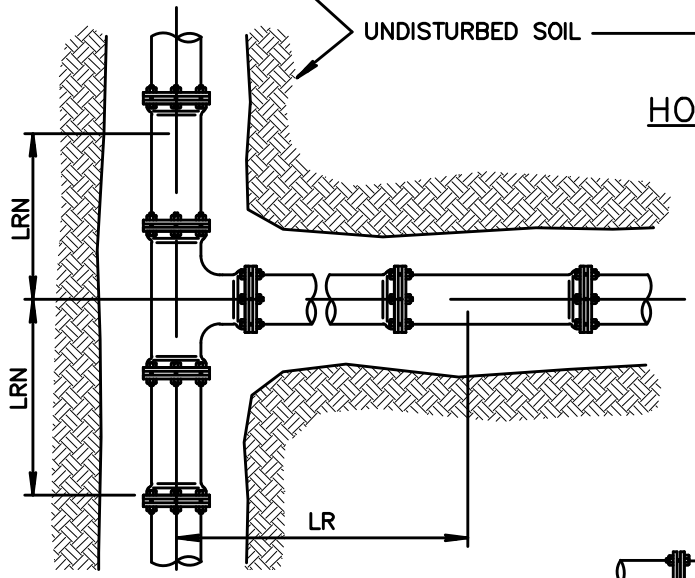

TEES

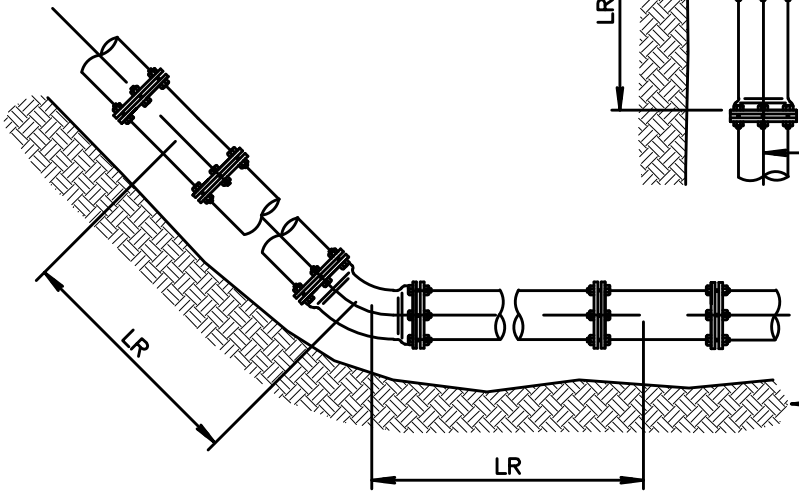

VERTICAL UP BEND

UNDISTURBED SOIL

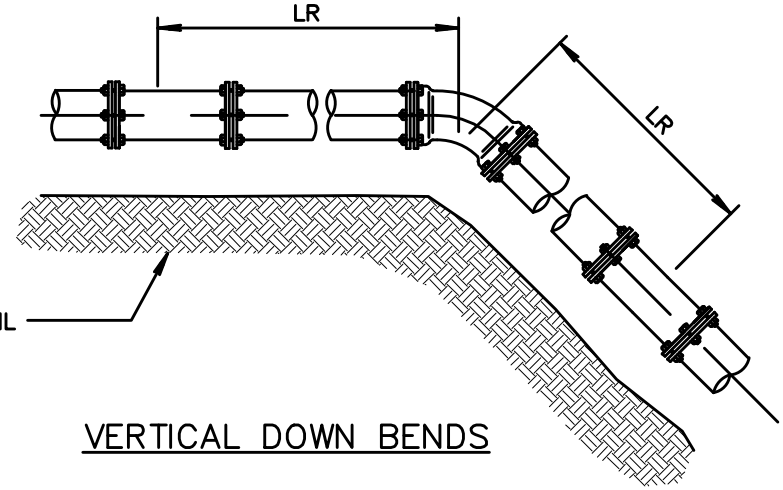

VERTICAL DOWN BENDS

QUAD CITY STANDARD DETAIL	JOINT RESTRAINT FOR DUCTILE IRON AND POLYETHYLENE WRAPPED DUCTILE IRON WATER PIPES	REVISED: 3/16	DETAIL No. 303Q-1

RESTRAINED LENGTHS, LR, FOR DUCTILE IRON PIPE

NOMINAL PIPE SIZE INCHES	HORIZONTAL BENDS			TEES		VERTICAL OFFSETS						VALVES & DEAD ENDS
						90° BEND FITTINGS		45° BEND FITTINGS		22-1/2° BEND FITTINGS		
	90°	45°	22-1/2°	LRN=0'	LRN=10'	DOWN BEND	UP BEND	DOWN BEND	UP BEND	DOWN BEND	UP BEND	
4	18	7	4	30	8	31	18	13	7	6	3	31
6	25	10	5	43	20	44	25	18	10	9	5	44
8	32	13	6	56	34	58	32	24	13	11	6	58
10	38	16	8	68	45	69	38	29	16	14	8	69
12	45	19	9	80	57	81	45	34	19	16	9	81
14	51	21	10	91	68	92	51	38	21	18	10	92
16	57	24	11	103	79	104	57	43	24	21	11	104
18	62	26	12	113	90	115	62	48	26	23	12	115
20	68	28	14	125	100	126	68	52	28	25	14	126
24	79	33	16	145	121	147	79	61	33	29	16	147

RESTRAINED LENGTHS, LR, FOR DUCTILE IRON PIPE WITH POLYETHYLENE WRAP OR PVC

NOMINAL PIPE SIZE INCHES	HORIZONTAL BENDS			TEES		VERTICAL OFFSETS						VALVES & DEAD ENDS
						90° BEND FITTINGS		45° BEND FITTINGS		22-1/2° BEND FITTINGS		
	90°	45°	22-1/2°	LRN=0'	LRN=10'	DOWN BEND	UP BEND	DOWN BEND	UP BEND	DOWN BEND	UP BEND	
4	26	11	5	69	18	72	26	30	11	14	5	72
6	36	15	7	99	47	102	36	42	15	20	7	102
8	47	19	9	130	78	133	47	55	19	26	9	133
10	56	23	11	157	103	159	56	66	23	32	11	159
12	65	27	13	185	131	187	65	77	27	37	13	187
14	74	31	15	211	156	214	74	89	31	42	15	214
16	82	34	16	238	183	241	82	100	34	48	16	241
18	90	37	18	263	207	266	90	110	38	53	18	266
20	98	41	20	289	233	292	98	121	41	58	20	292
24	113	47	22	337	280	340	113	141	47	68	22	340

NOTES:

1. ALL JOINTS WITHIN THE SPECIFIED LENGTH LR MUST BE RESTRAINED. ALL LENGTHS ARE GIVEN IN FEET.
2. THE MAXIMUM TEST PRESSURE SHALL NOT EXCEED 200 PSI
3. THE MINIMUM DEPTH OF BURY SHALL BE 4' TO TOP OF PIPE.

QUAD CITY STANDARD DETAIL	JOINT RESTRAINT FOR DUCTILE IRON AND POLYETHYLENE WRAPPED DUCTILE IRON WATER PIPES	REVISED: 3/16	DETAIL No. 303Q-2

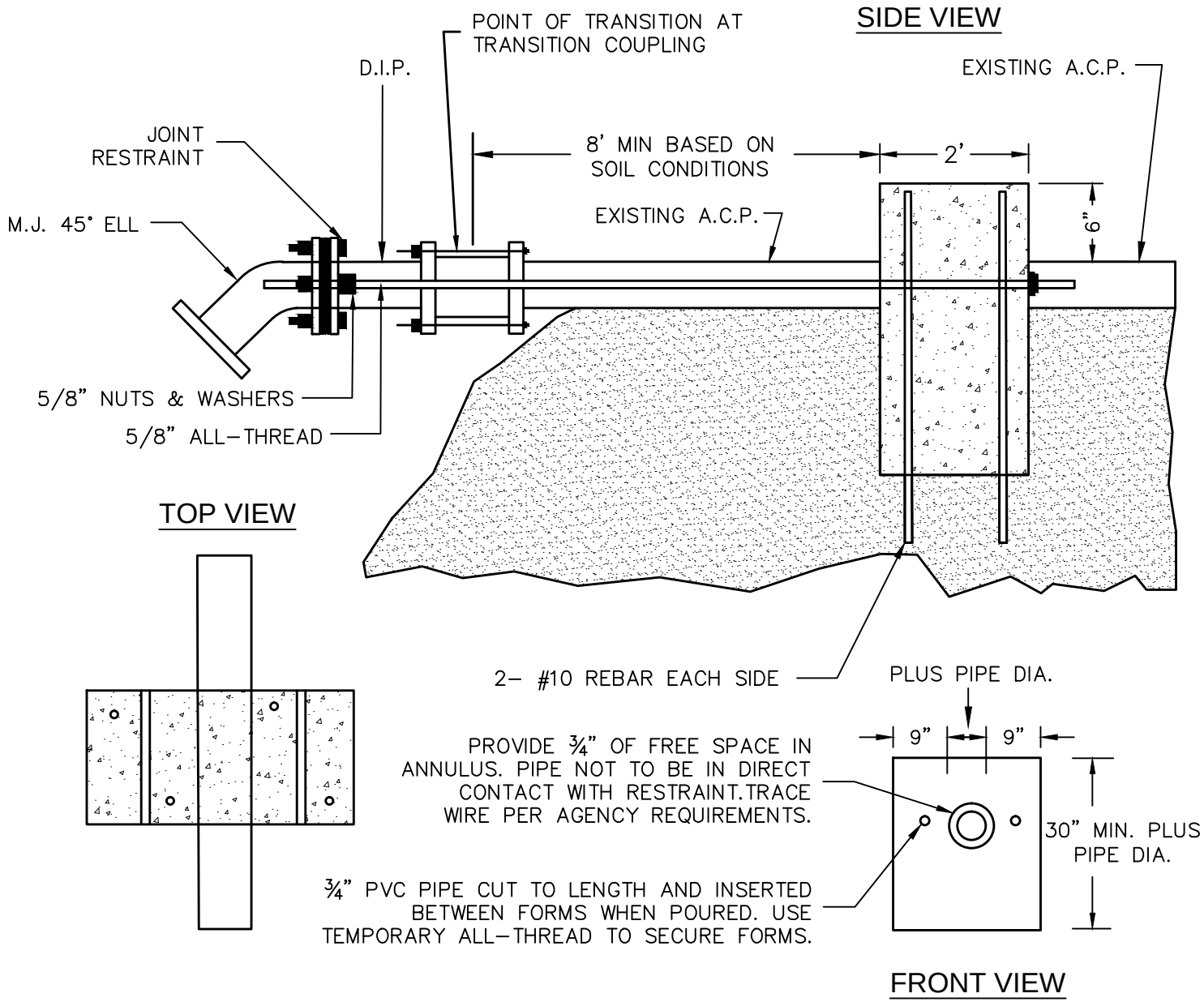

QUAD CITY STANDARD DETAIL	REVERSE THRUST BLOCK ACP	REVISED: 3/16	DETAIL No. 303Q-3

PIPE SIZE	A	B	VERT REINF	C	VOL. (yd^3)	WEIGHT (LBS)	THRUST (LBS)
4" Ø	3'-0"	1'-6"	(2)-#4	1'-4"	0.23	932	3844
6" Ø	3'-8"	2'-0"	(2)-#4	2'-0"	0.55	2228	8594
8" Ø	4'-6"	2'-0"	(2)-#4	3'-0"	1.00	4050	15414
10" Ø	6'-0"	2'-4"	(4)-#4	3'-4"	1.73	7007	23751
12" Ø	6'-6"	2'-4"	(4)-#4	4'-6"	2.53	10247	34157
14" Ø	7'-0"	2'-6"	(4)-#4	5'-8"	3.68	14904	46448
16" Ø	8'-0"	2'-9"	(6)-#4	6'-4"	5.16	20898	60772
18" Ø	9'-0"	3'-0"	(6)-#4	7'-2"	7.17	29039	77018

NOTES:
1. CONCRETE SHALL BE MAG CLASS "B".
2. CONCRETE SHALL BE POURED AGAINST UNDISTURBED EARTH EXCEPT WHERE FORMWORK IS A MUST. AFTER CONCRETE IS CURED THE FORMWORK SHALL BE REMOVED.
3. PIPE MUST BE DUCTILE IRON.
4. BASED ON 200 PSI TEST PRESSURE.
5. HORIZONTAL AND VERTICAL BENDS OPTIONAL.
6. RETAINER GLAND = FORD SERIES 1300 UNI-FLANGE RETAINER GLAND OR EQUAL (TYP).

PIPE SIZE	A	B	VERT REINF	C	VOL. (yd^3)	WEIGHT (LBS)	THRUST (LBS)
4" Ø	2'-0"	1'-6"	(2)-#4	1'-4"	0.15	608	2718
6" Ø	3'-0"	1'-8"	(2)-#4	2'-0"	0.38	1539	6077
8" Ø	3'-6"	2'-0"	(2)-#4	2'-8"	0.70	2835	10900
10" Ø	5'-0"	2'-2"	(4)-#4	3'-0"	1.21	4901	16794
12" Ø	5'-6"	2'-4"	(4)-#4	4'-0"	1.90	7695	24153
14" Ø	6'-0"	2'-4"	(4)-#4	5'-0"	2.59	10490	32844
16" Ø	6'-6"	2'-8"	(6)-#4	5'-8"	3.65	14783	42973
18" Ø	7'-0"	3'-0"	(6)-#4	6'-6"	5.06	20493	54460

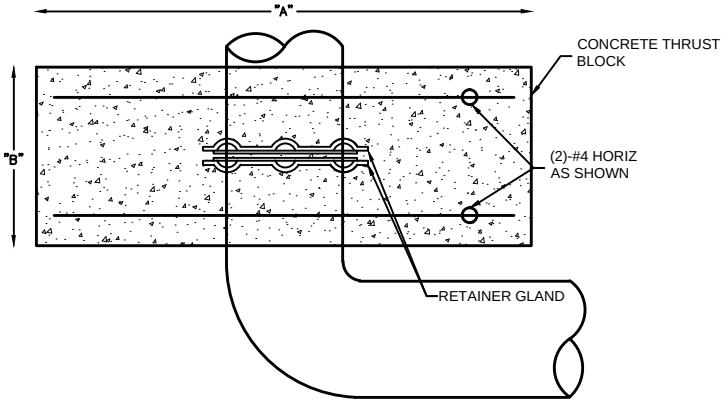

THRUST BLOCK AT ANGLE

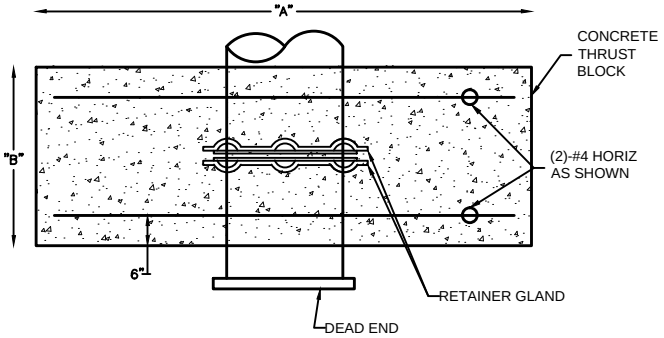

THRUST BLOCK AT DEAD END

PROFILE

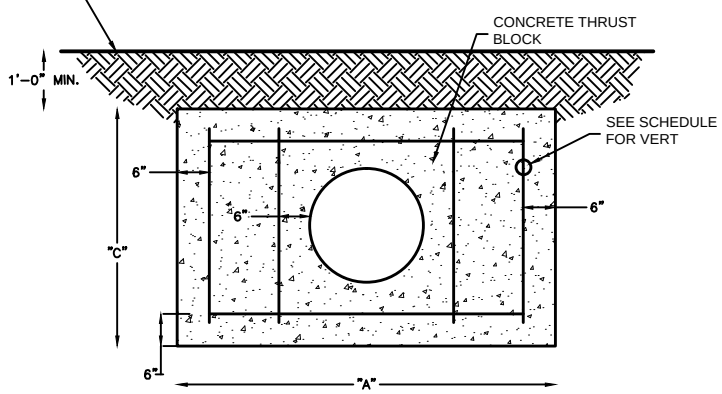

SECTION

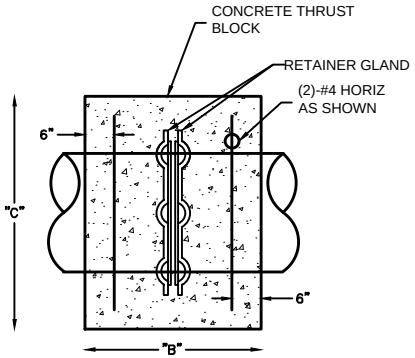

QUAD CITY STANDARD DETAIL	REVERSE THRUST BLOCK PVC - DIP	REVISED: 3/16	DETAIL No. 303Q-4

NOTES

1. NDS D1800 B/O (METER BOX ONLY) OR APPROVED EQUAL – 14"Wx19"Lx18"D.
2. FOR SINGLE BOX APPLICATION, USE NDS D12–TAMRL LOCKING SOLID PLASTIC LID WITH 2 INCH AMR/TRANSMITTER HOLE WITH 7 INCH TOP RECESS COVER.
3. FOR DUAL BOX (SIDE BY SIDE METERS), USE SOLID DROP–IN LID ON THE SECOND BOX.
4. NDS D600E–EXT–TOP BOX EXTENSION OR APPROVED EQUAL.

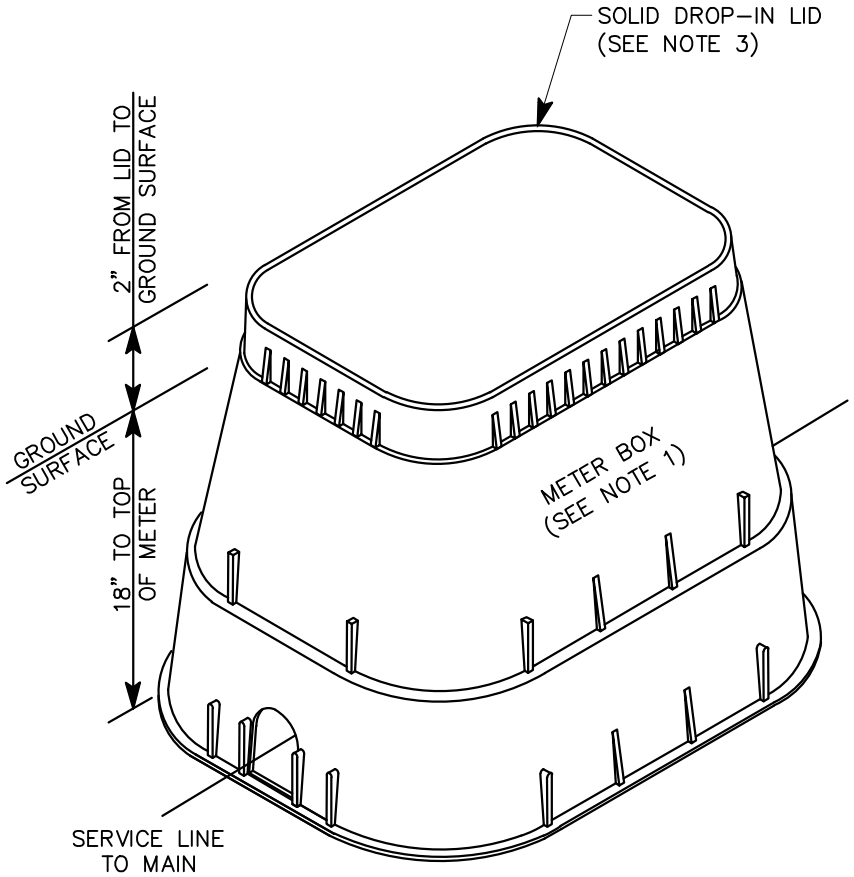

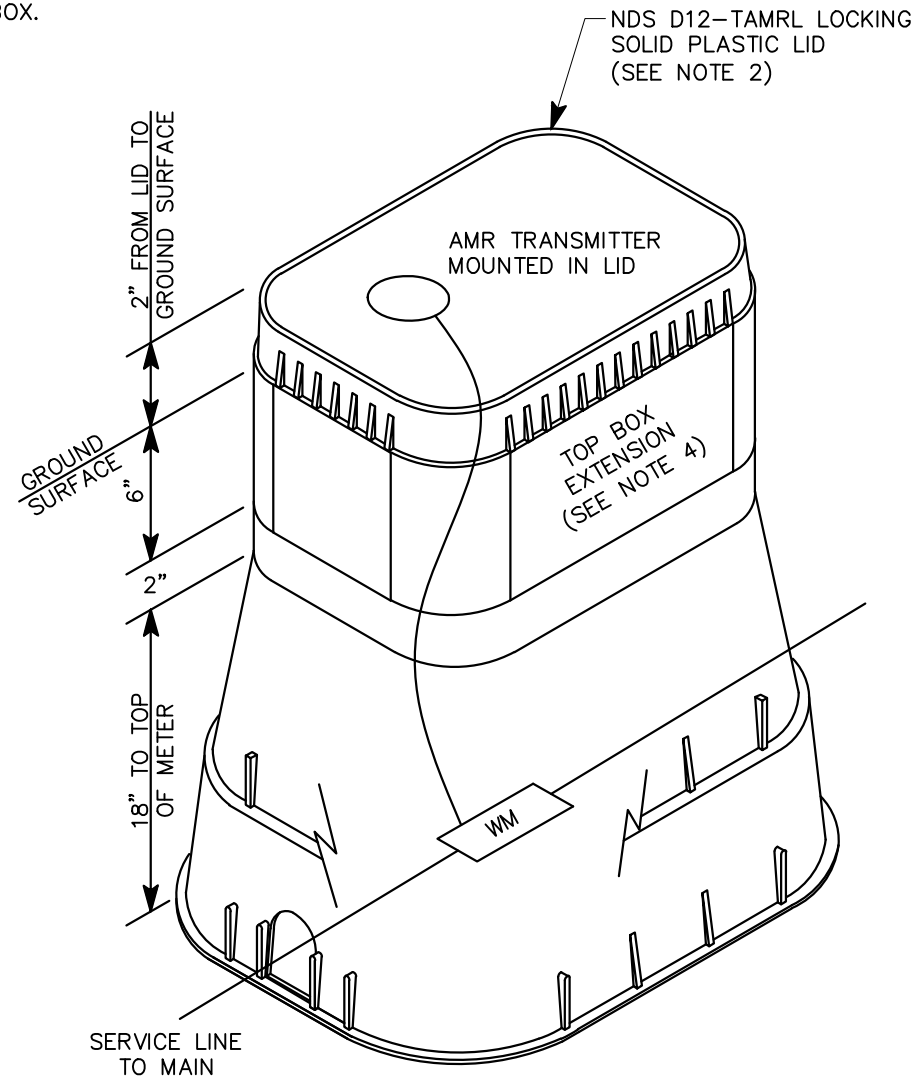

PV STANDARD DETAIL	5/8" THROUGH 1" METER BOX APPLICATIONS	TOWN ENGINEER	REVISED: 4/16	DETAIL No. 310PV-1

NOTES

1. NDS 17" WIDE x 30" LONG METER BOX OR APPROVED EQUAL.
2. NDS 126 BCDWB METER BOX, BOLT DOWN DROP-IN SOLID PLASTIC LID OR APPROVED EQUAL.

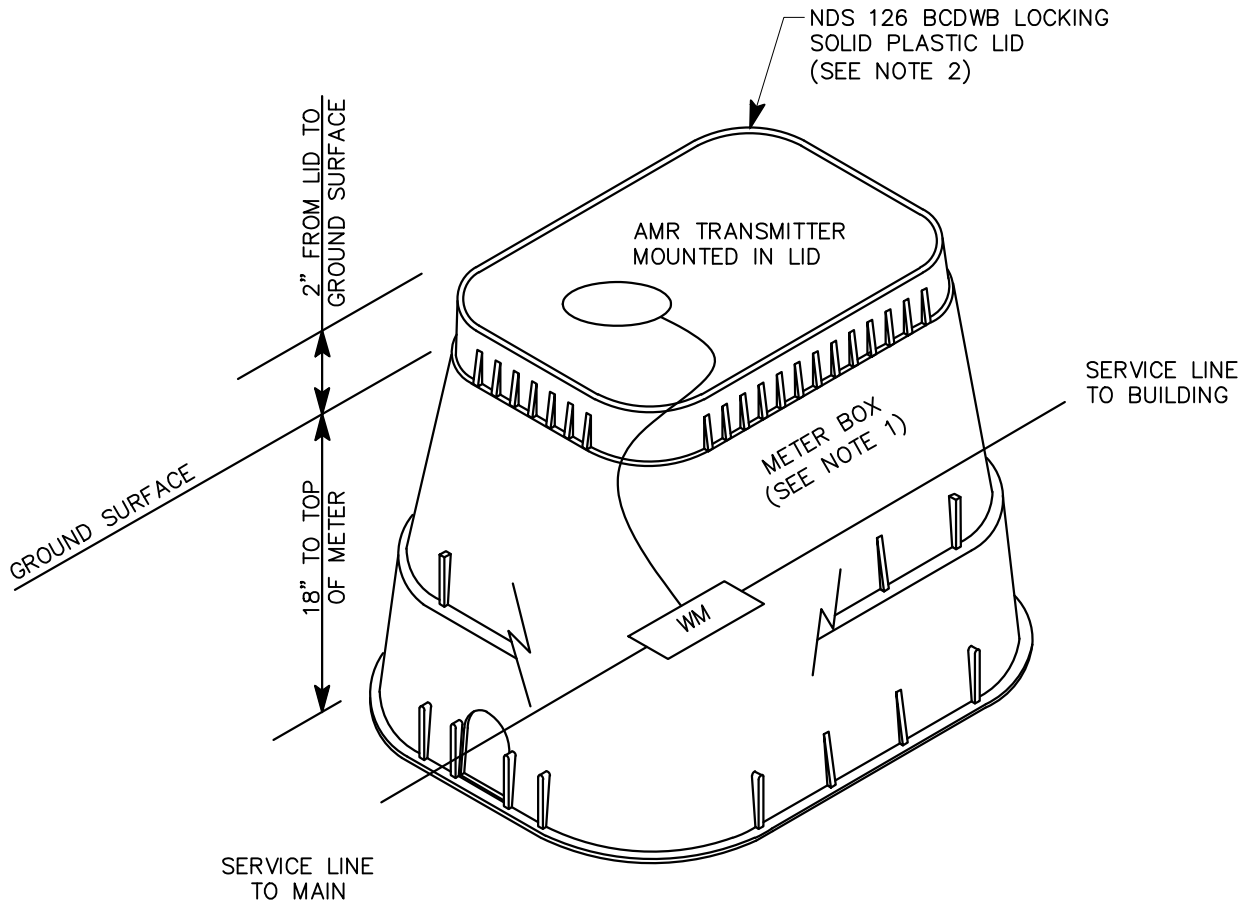

PV STANDARD DETAIL	1½" THROUGH 2" METER BOX APPLICATIONS	TOWN ENGINEER	REVISED: 4/16	DETAIL No. 310PV-2

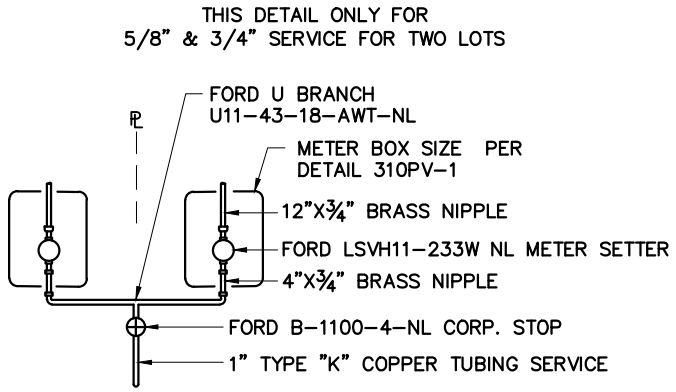

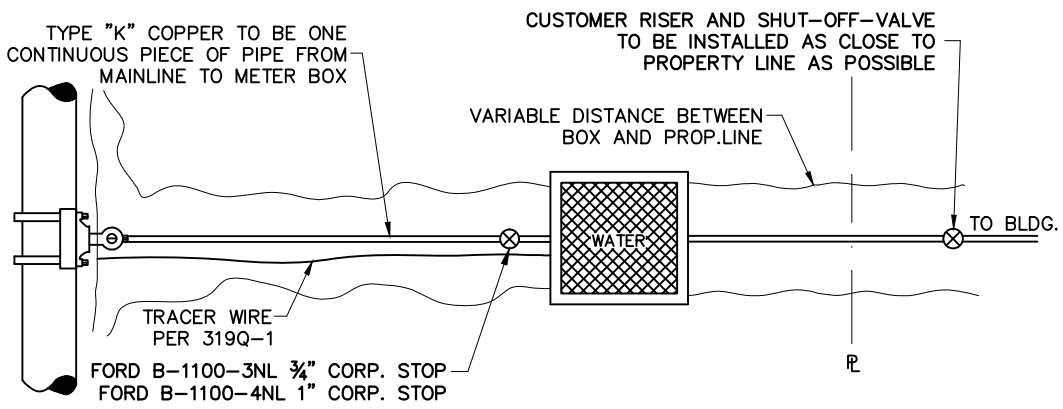

– PLAN VIEW –

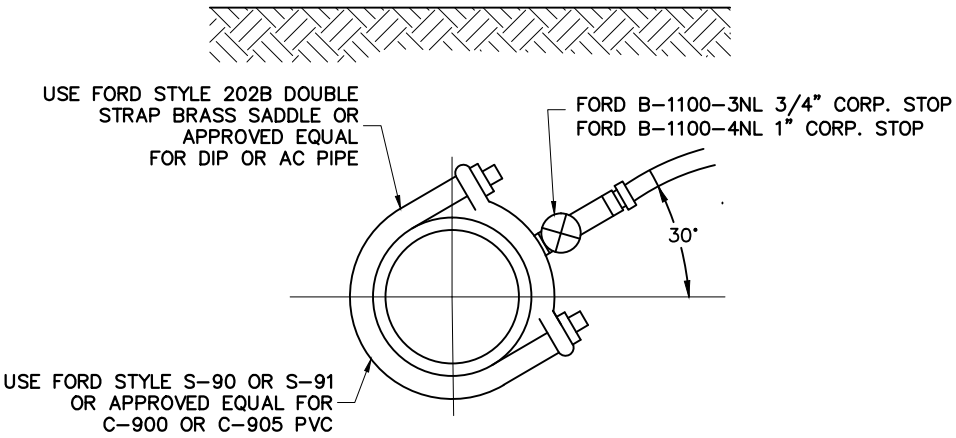

– SIDE VIEW –

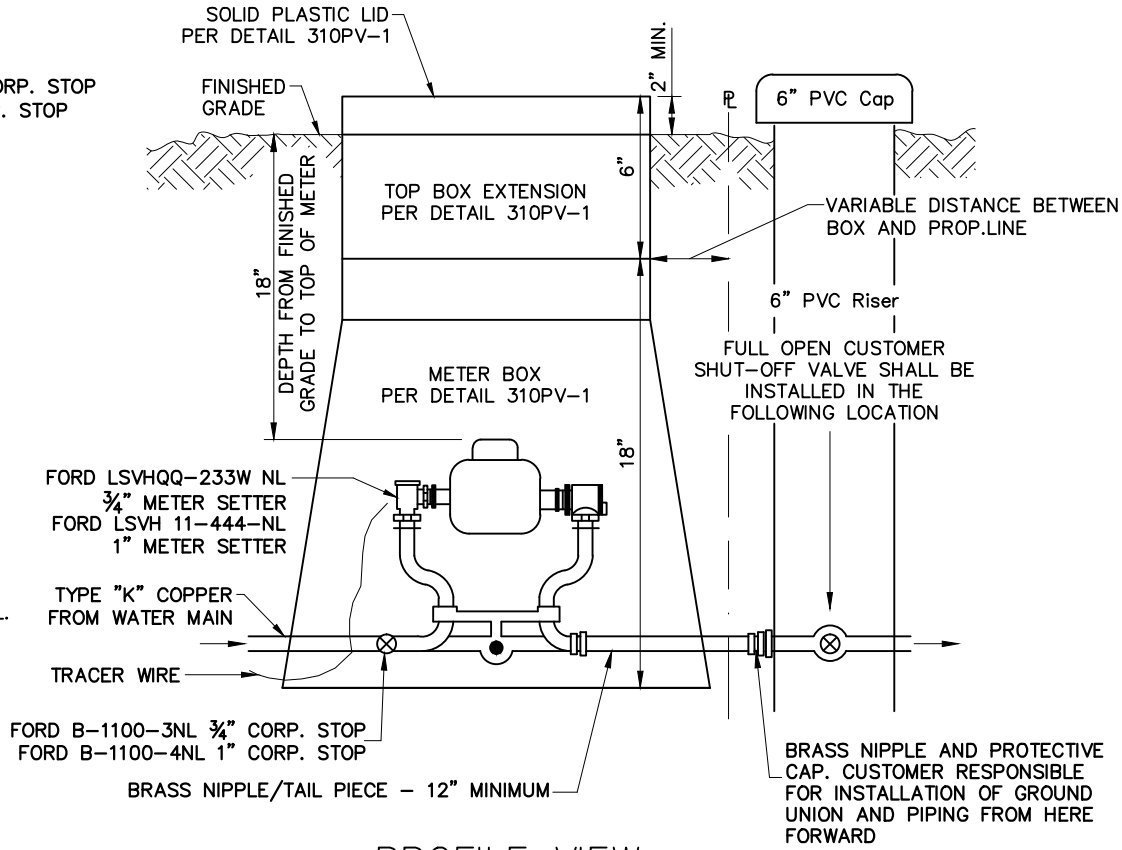

– PROFILE VIEW –

NOTES

1. ALL BRASS PARTS LISTED ARE FORD METER BOX COMPANY OR APPROVED EQUAL.
2. SERVICE LINE SHALL BE TYPE "K" COPPER CONTAINING NO SPLICES.
3. METER BOX AND LID SHALL BE NDS OR APPROVED EQUAL.
4. METER BOXES SHALL BE PER DETAIL 310PV-1.
5. REFER TO DETAIL 200Q FOR WATER SERVICE BEDDING AND SHADING.
6. METER BOX SHALL NOT BE LOCATED IN DRIVEWAYS, SIDEWALKS OR STREETS.
7. NO LANDSCAPE FEATURES OR VEGETATION LOCATED WITHIN 5' OF METER BOXES.
8. SERVICE LINE IS TO HAVE A MIN. 3 FT COVER WITHIN ROAD PRISM.
9. FOR CUT OR FILL SLOPE METER LOCATIONS, CMU WALL OR APPROVED METHOD SHALL BE REQUIRED FOR PROTECTION OF METER SET.

PV STANDARD DETAIL	5/8" THROUGH 1" WATER SERVICE CONNECTION	TOWN ENGINEER	REVISED: 4/16	DETAIL No. 310PV-3

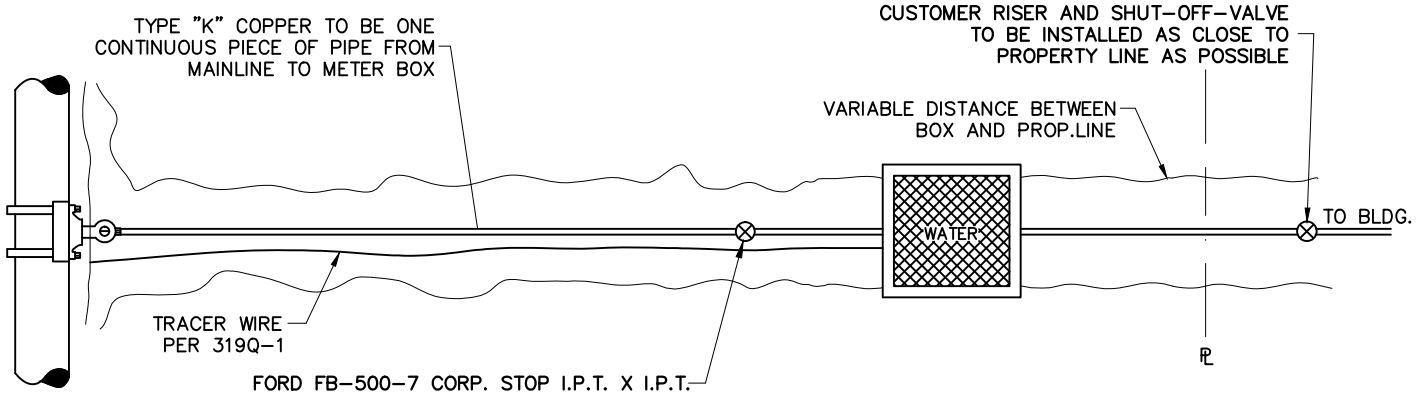

– PLAN VIEW –

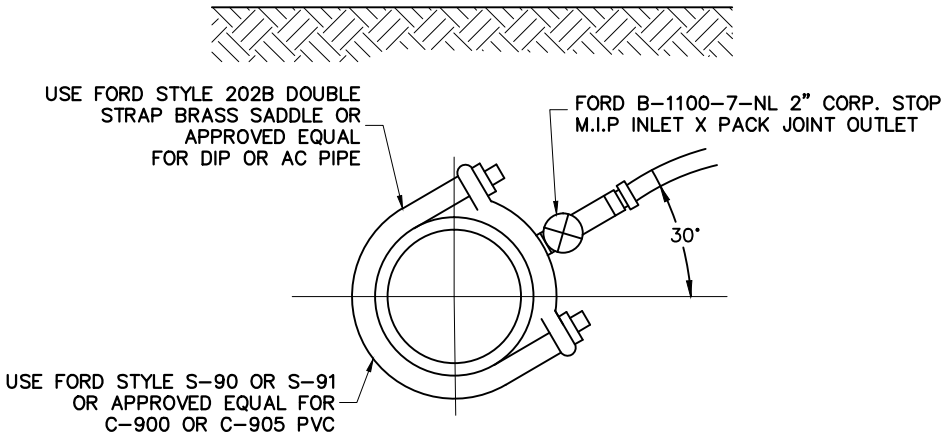

– SIDE VIEW –

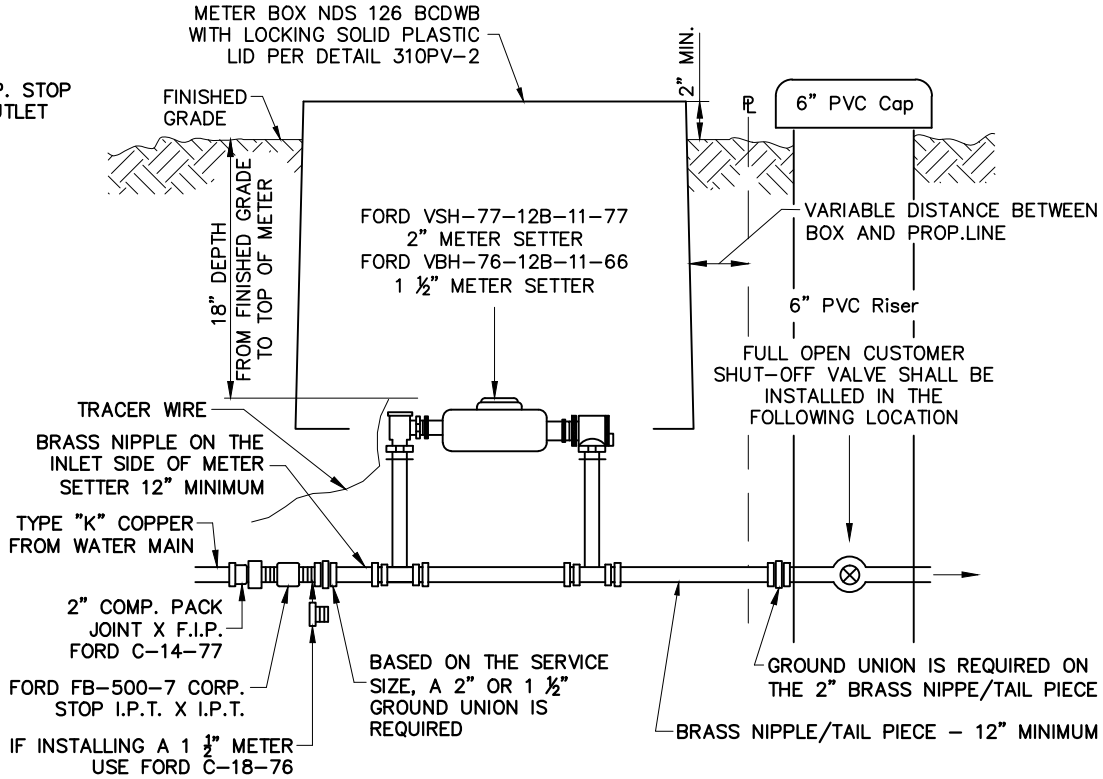

– PROFILE VIEW –

NOTES

1. ALL BRASS PARTS LISTED ARE FORD METER BOX COMPANY OR APPROVED EQUAL.
2. SERVICE LINE SHALL BE TYPE "K" COPPER CONTAINING NO SPLICES.
3. METER BOX AND LID SHALL BE NDS OR APPROVED EQUAL.
4. METER BOXES SHALL BE PER DETAIL 310PV-2.
5. REFER TO DETAIL 200Q FOR WATER SERVICE BEDDING AND SHADING.
6. METER BOX SHALL NOT BE LOCATED IN DRIVEWAYS, SIDEWALKS OR STREETS.
7. NO LANDSCAPE FEATURES OR VEGETATION LOCATED WITHIN 5' OF METER BOXES.
8. SERVICE LINE IS TO HAVE A MIN. 3 FT COVER WITHIN ROAD PRISM.
9. FOR CUT OR FILL SLOPE METER LOCATIONS, CMU WALL OR APPROVED METHOD SHALL BE REQUIRED FOR PROTECTION OF METER SET.
10. ALL 1 ½" AND 2" SERVICES SHALL BE INSTALLED USING 2" SERVICE LINE FROM THE MAINLINE TO THE CORP STOP PRIOR TO THE METER.

PV STANDARD DETAIL	1 ½" THROUGH 2" WATER SERVICE CONNECTIONS	TOWN ENGINEER	REVISED: 4/16	DETAIL No. 310PV-4

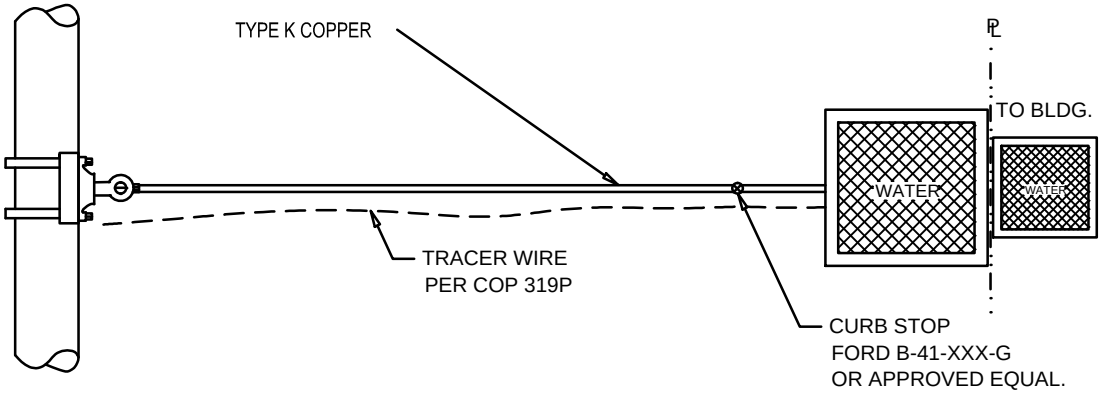

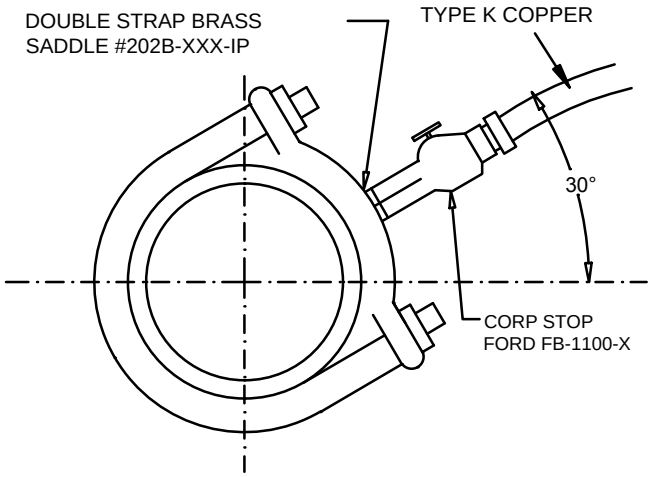

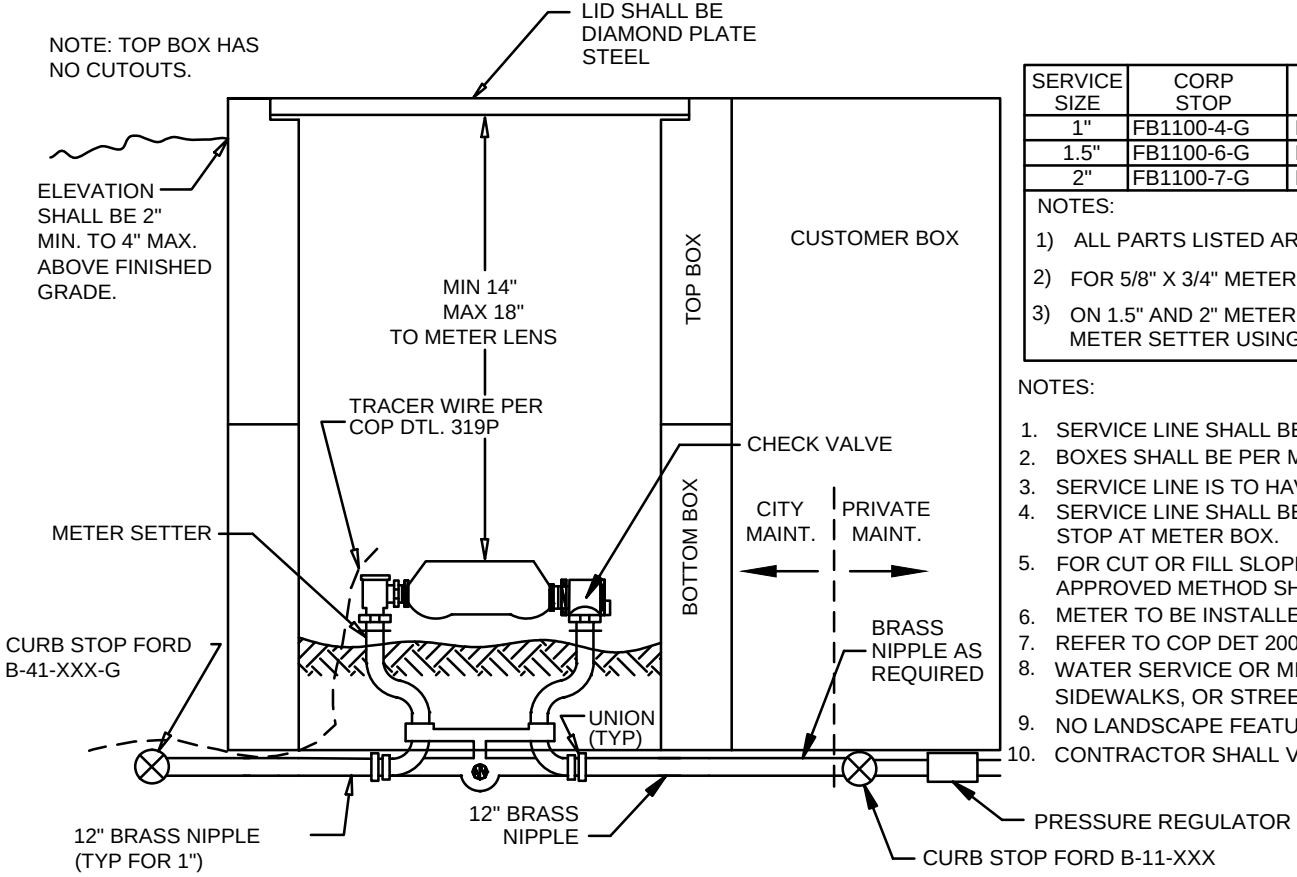

SERVICE SIZE	CORP STOP	CURB STOP	METER SETTER	CITY BOX	CURB STOP	CUSTOMER BOX
1"	FB1100-4-G	B41-444-G	VBH74-9W-11-44	#2	B11-444	#1
1.5"	FB1100-6-G	B41-666-G	VBH76-12W-11-66	#4	B11-666	#2
2"	FB1100-7-G	B41-777-G	VBH77-12W-11-77	#4	B11-777	#2

NOTES:

1) ALL PARTS LISTED ARE FORD METER BOX CO. OR APPROVED EQUAL.
2) FOR 5/8" X 3/4" METERS, INSTALL FORD A24 METER ADAPTERS.
3) ON 1.5" AND 2" METERS INSTALL UNIONS ON EACH SIDE OF THE METER SETTER USING 6" BRASS NIPPLES IN-LIEU OF 12" BRASS NIPPLES.

NOTES:

1. SERVICE LINE SHALL BE TYPE K COPPER WITH 8 MIL POLYWRAP.
2. BOXES SHALL BE PER MAG STD. DETAIL 320.
3. SERVICE LINE IS TO HAVE MIN. 3 FT. COVER WITHIN THE ROADWAY PRISM.
4. SERVICE LINE SHALL BE UNSPLICED FROM CORP. STOP AT MAIN TO CURB STOP AT METER BOX.
5. FOR CUT OR FILL SLOPE METER LOCATIONS, CMU WALL OR OTHER APPROVED METHOD SHALL BE REQUIRED FOR PROTECTION OF METER SET.
6. METER TO BE INSTALLED BY C.O.P. ONLY.
7. REFER TO COP DET 200P FOR WATER SERVICE BEDDING AND SHADING.
8. WATER SERVICE OR METER BOX SHALL NOT BE LOCATED IN DRIVEWAYS, SIDEWALKS, OR STREETS.
9. NO LANDSCAPE FEATURES OR VEGETATION WITHIN 5' OF METER BOXES.
10. CONTRACTOR SHALL VERIFY FACTORY SETTING ON PRESSURE REGULATOR.

COP STANDARD DETAIL	1" - 2" WATER SERVICE CONNECTIONS	CITY ENGINEER	REVISED: 01/15	DETAIL No. 316P

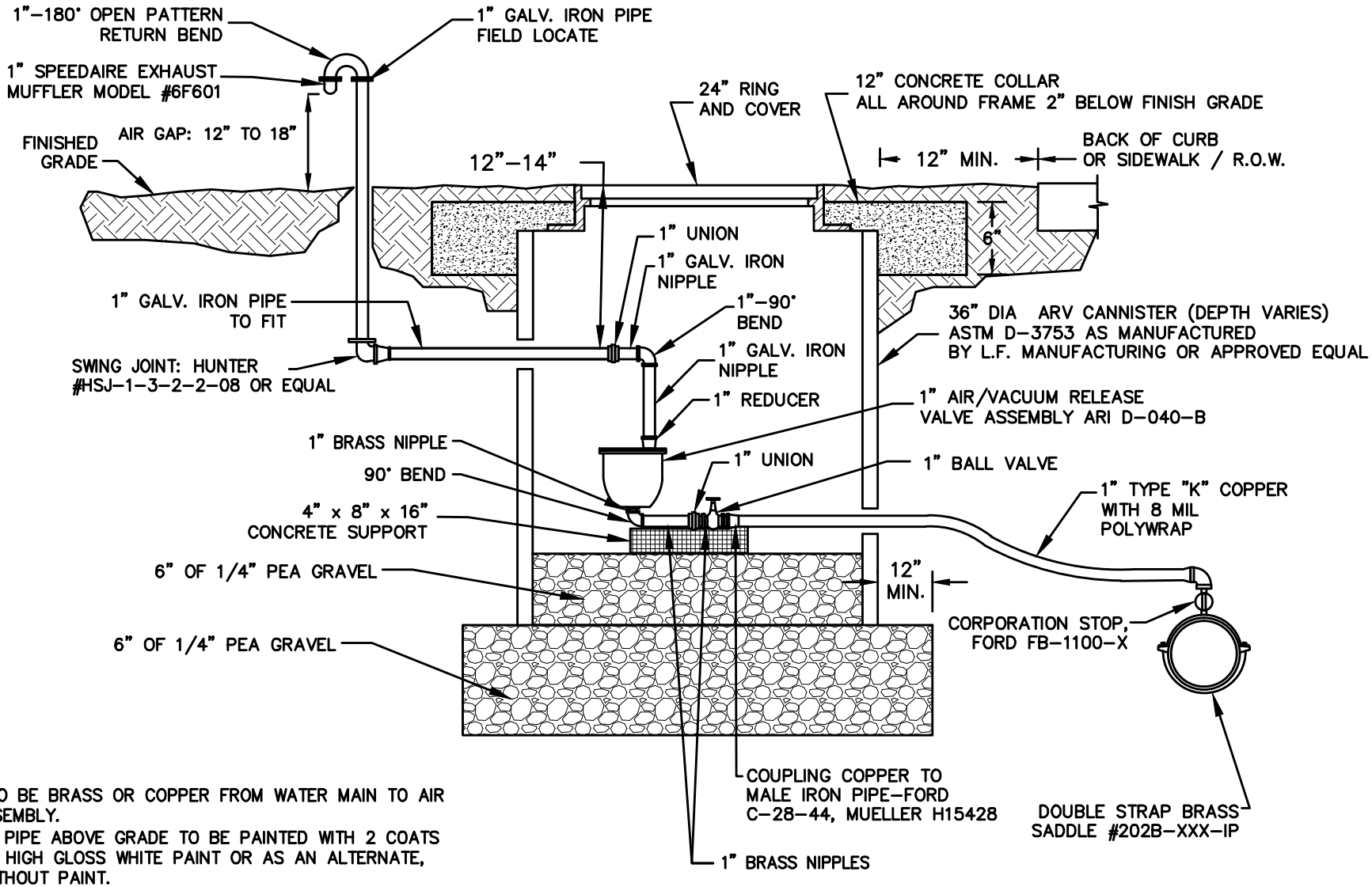

NOTES:

1. ALL FITTINGS TO BE BRASS OR COPPER FROM WATER MAIN TO AIR & VACUUM ASSEMBLY.
2. 1" GALVANIZED PIPE ABOVE GRADE TO BE PAINTED WITH 2 COATS OF RUSTOLEUM HIGH GLOSS WHITE PAINT OR AS AN ALTERNATE, BRASS PIPE WITHOUT PAINT.
3. AIR & VACUUM RELEASE VALVE ASSEMBLY MUST BE INSTALLED AT HIGHEST POINT OF LINE. IF HIGH POINT FALLS IN A LOCATION WHERE ASSEMBLY CANNOT BE INSTALLED, PROVIDE ADDITIONAL DEPTH OF LINE TO CREATE HIGHPOINT AT A LOCATION WHERE ASSEMBLY CAN BE INSTALLED.
4. LOCATE AIR & VACUUM METER BOX OUTSIDE OF TRAFFIC AREAS, BEHIND CURB. IN SIDEWALKS AND AREAS WITH VEHICULAR TRAFFIC, USE OLYMPIC FOUNDRY SM–30 CAST IRON BOX & COVER.

QUAD CITY STANDARD DETAIL	1" AIR VACUUM RELEASE VALVE ASSEMBLY	REVISED: 3/16	DETAIL No. 317Q-1

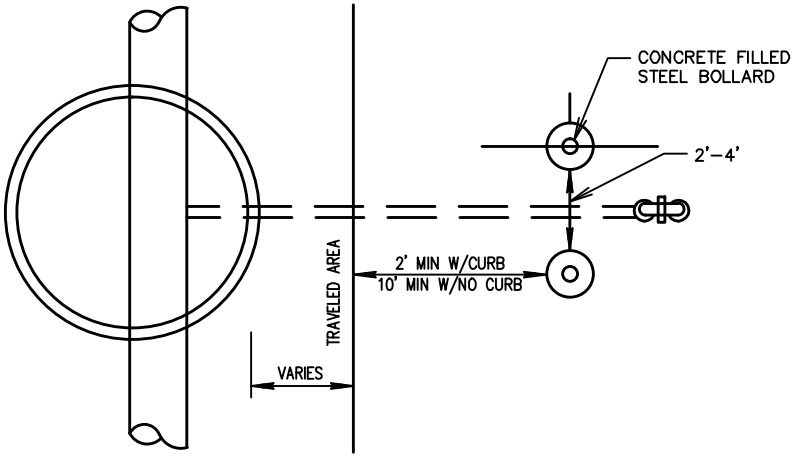

PLAN
NTS

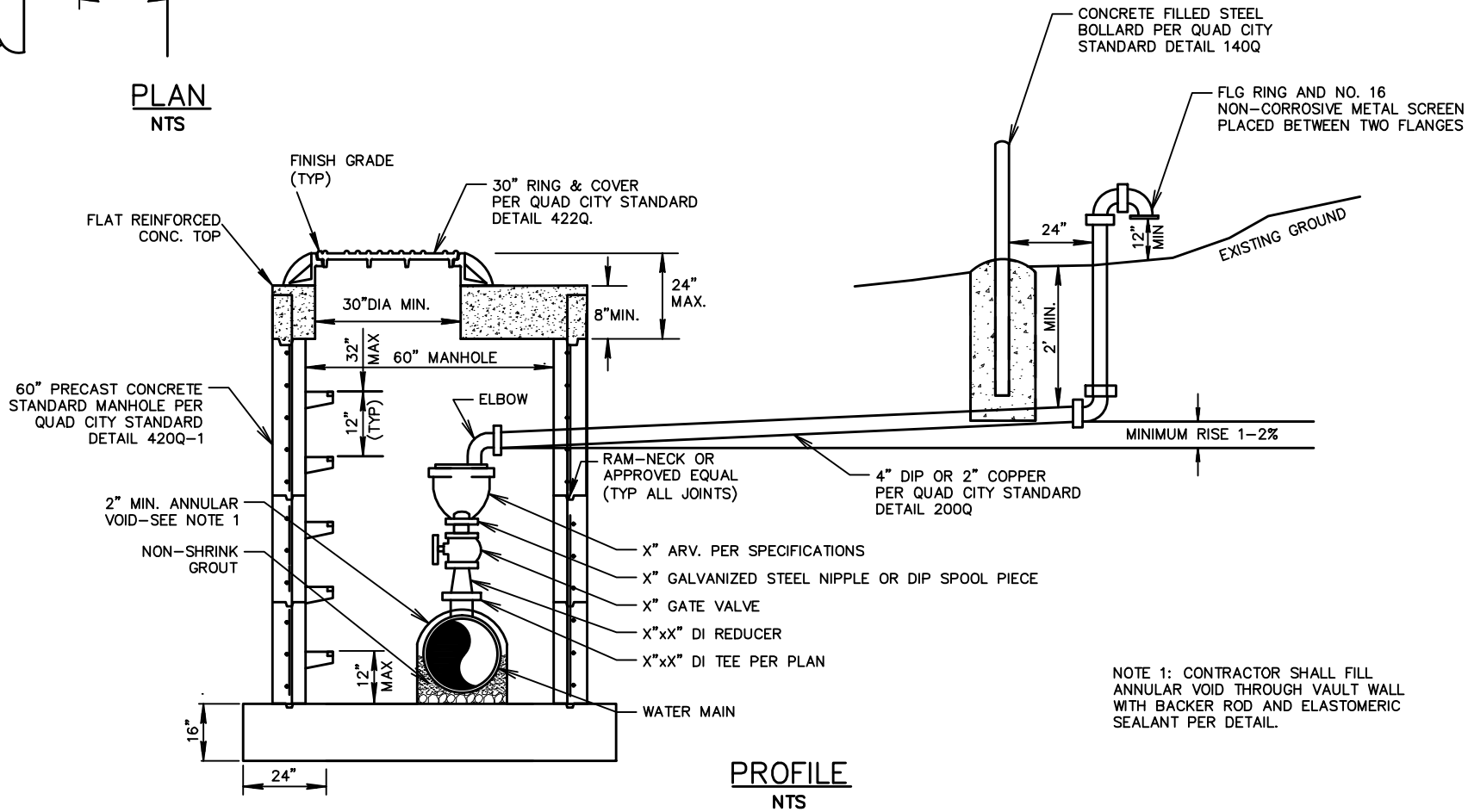

NOTE 1: CONTRACTOR SHALL FILL ANNULAR VOID THROUGH VAULT WALL WITH BACKER ROD AND ELASTOMERIC SEALANT PER DETAIL.

PROFILE
NTS

QUAD CITY STANDARD DETAIL	2" TO 4" AIR RELEASE VALVE	REVISED: 3/16	DETAIL No. 317Q-2

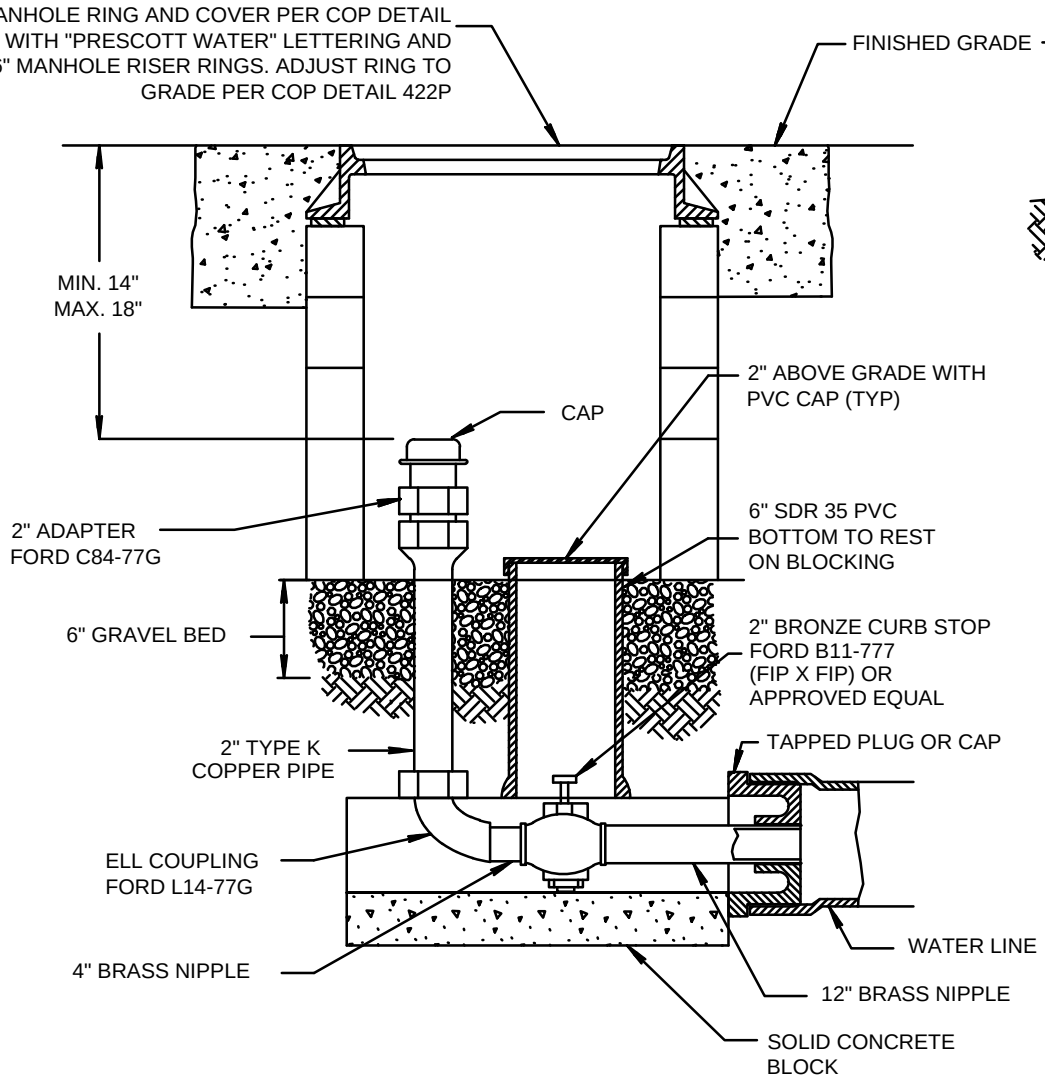

TRAFFIC AREAS

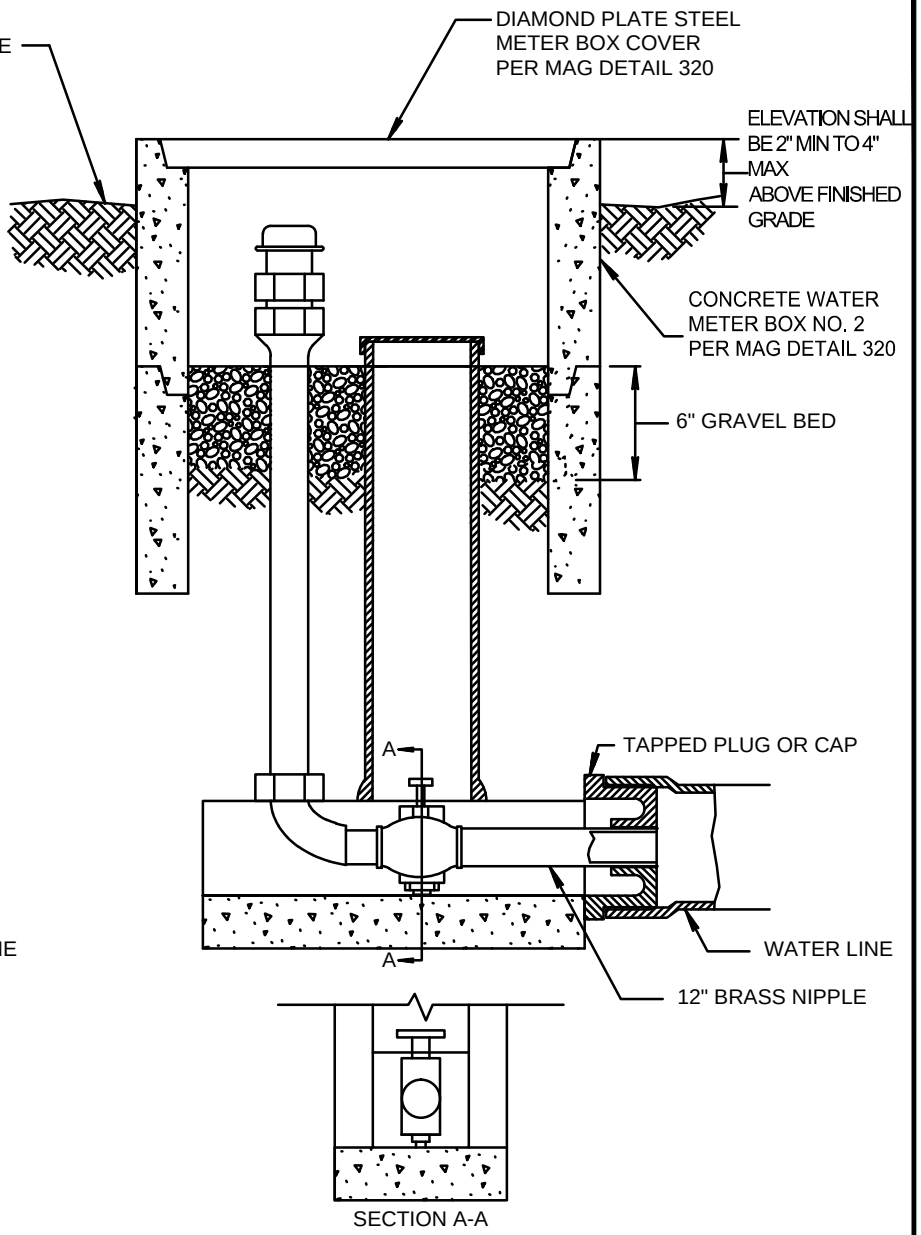

NON-TRAFFIC AREAS

COP STANDARD DETAIL	BLOW OFF	CITY ENGINEER	REVISED: 01/15	DETAIL No. 318P

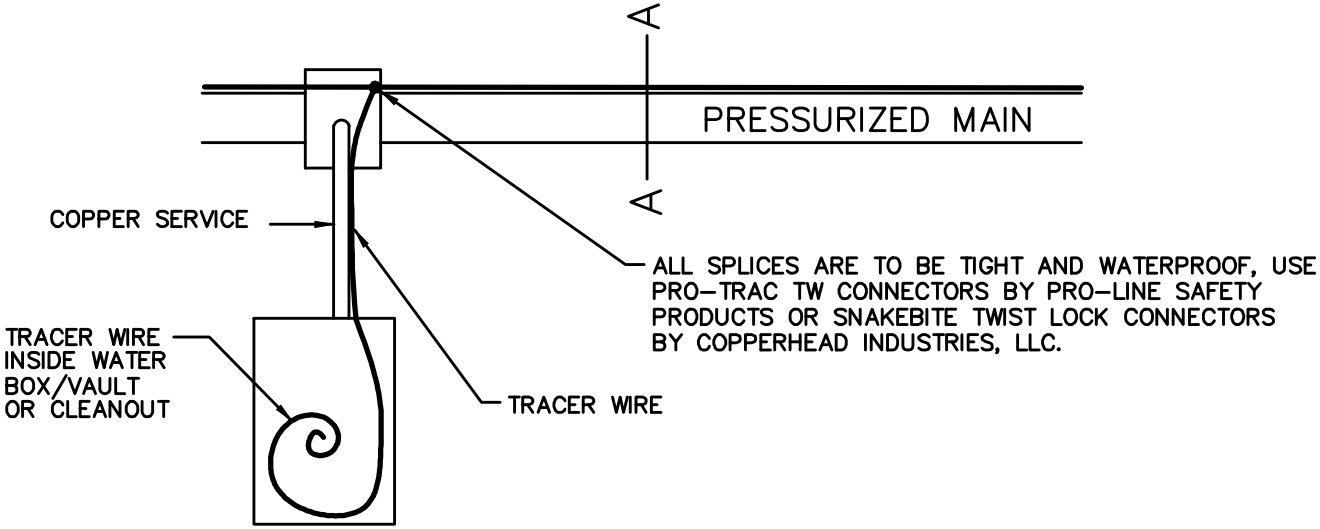

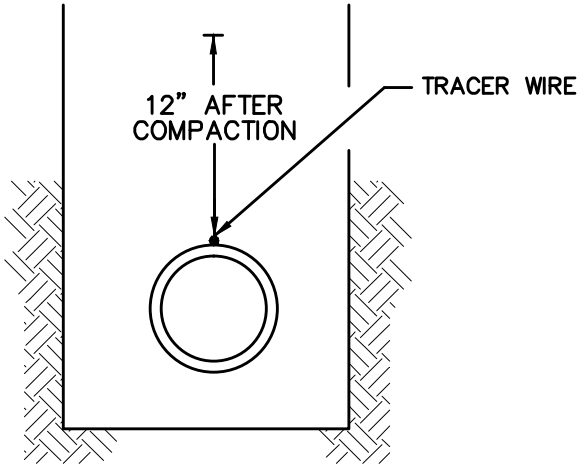

SECT. A–A

NOTES:

1. TRACER WIRE SHALL BE REQUIRED FOR ALL PRESSURE PIPE INSTALLATION AS INDICATED ON OTHER STANDARD DETAILS. TRACER WIRE SHALL BE #14 AWG HS–CCS, 30 MIL HDPE INSULATION.
2. FINAL CONTINUITY TESTING FOR ACCEPTANCE OF TRACER WIRE SHALL BE MADE AT PROJECT COMPLETION.
3. WIRE IS TO BE ATTACHED TO ALL APPURTENANCES.
4. TRACER WIRE IS TO BE PLACED AT TOP CENTER OF PIPE AND SECURED BY TAPE AT A MINIMUM OF 6' INTERVALS.
5. THIS DETAIL DOES NOT PERTAIN TO STRAIGHT RUN GRAVITY SANITARY SEWER MAINS IN THE CITY OF PRESCOTT.
6. TRACER WIRE STATION SHALL BE USED AT ALL FIRE HYDRANTS, SEWER WET WELLS, FORCE MAIN DISCHARGE MANHOLES, FORCE MAIN CLEANOUTS, FORCE MAIN VALVE LOCATIONS AND LOW PRESSURE SEWER MAIN APPURTENANCES IN ACCORDANCE WITH QUAD CITY STANDARD DETAIL 319Q–2.
7. PASS A CONTINUITY TEST, CONDUCTED BY THE CONTRACTOR AND WITNESSED BY THE ENGINEER OF RECORD (EOR) AND THE TOWN OF PRESCOTT VALLEY. THE EOR SHALL PROVIDE A CERTIFICATION OF PASSING TO THE CONTRACTOR AND TOWN.
8. TO PASS A CONTINUITY TEST, THE FOLLOWING CONDITIONS MUST BE MET:
    1. CONTINUITY TEST SHALL BE PERFORMED BY USING A METALLIC LOCATOR WITH AUDIBLE TONE AND NUMERIC VALUES FOR CERTIFICATION OF FACILITY LOCATIONS AND SHALL BE IDENTIFIABLE BETWEEN ACCESS POINTS.
    2. THE WIRE SHALL BE ACCESSIBLE AT ALL ACCESS POINTS AND FROM ACCESS POINT TO ACCESS POINT.
    3. DEPTH READINGS MUST BE ACCURATE AND CONSISTENT TO WITHIN 15 (DEPTH TO DIAMETER RATIO).
    4. ACCESS POINTS THAT ARE WIDELY SPACED CAN BE TRACED IN WORST CASE FROM EACH END TO A COMMON METTING POINT BETWEEN THEM.
9. CONTRACTOR MUST PROVIDE EOR AND TOWN WITH THE FOLLOWING:
    1. SAMPLE OF WIRE.
    2. SAMPLE OF CONNECTOR.
    3. INVOICE COPY SHOWING PURCHASE OF WIRE AND CONNECTOR.

DETECTABLE TAPE SHALL BE:

1. PRO–LINE SAFETY PRODUCTS OR HYTECH DETECTABLE TAPE (UNDERGROUND WARNING TAPE). NO EXCEPTIONS.
2. 3 INCHES IN WIDTH
3. 5 MIL OVERALL THICKNESS WITH A .35 MIL SOLID ALUMINUM FOIL CORE.
4. CONSTRUCTED WITH A .8 MIL CLEAR FILM, REVERSE PRINTED WITH A REPEATING WARNING MESSAGE AND LAMINATE TO ALUMINUM FOIL WITH A 3.75 MIL CLEAR FILM BACKING.
5. LETTERED WITH A MINIMUM OF 1" INCH.
6. COLOR CODED FOR SPECIFIC UTILITY. WATER – BLUE, SANITARY SEWER – GREEN, RECLAIMED WATER – PURPLE IN ACCORDANCE WITH APWA UNIFORM COLOR CODE.
7. CONTRACTOR MUST PROVIDE EOR AND AGENCY WITH THE FOLLOWING:
    1. SAMPLE OF TAPE.
    2. INVOICE COPY SHOWING PURCHASE OF WIRE AND CONNECTOR.

QUAD CITY STANDARD DETAIL	TRACER WIRE	REVISED: 3/16	DETAIL No. 319Q-1

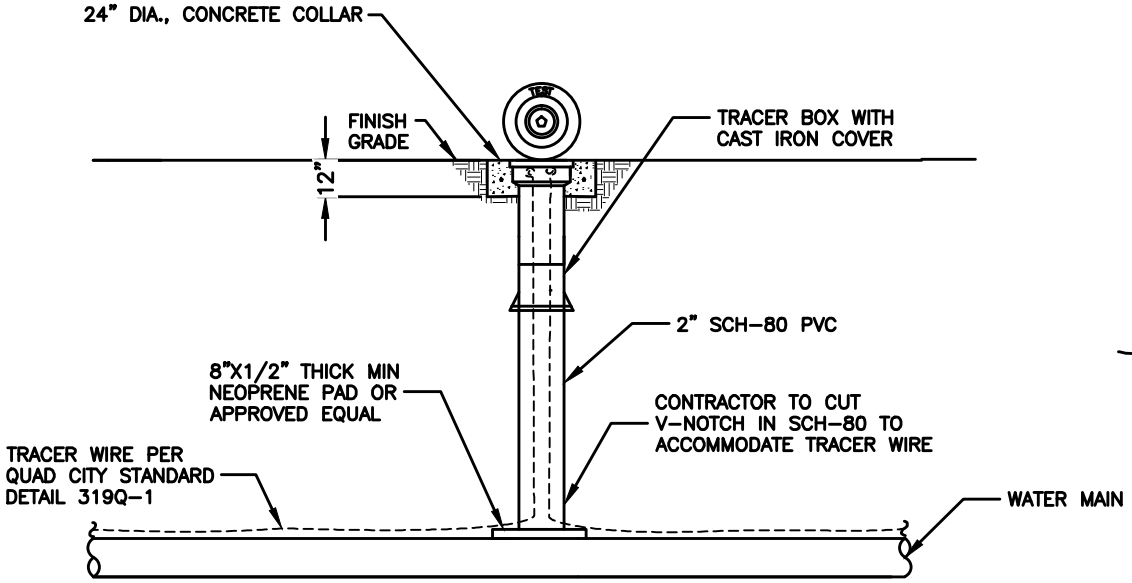

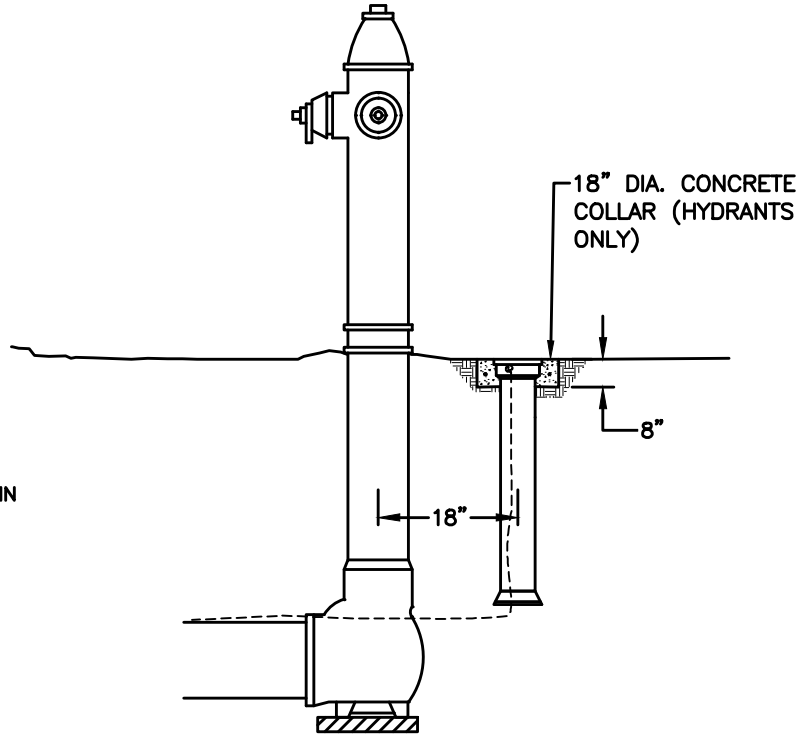

FIRE HYDRANT TRACER STATION

NOTES:

1. TRACER BOX AND CAST IRON COVER SHALL BE COPPERHEAD INDUSTRIES, LLC SNAKEPIT OR APPROVED EQUAL, MODEL RB14*TP OR CD14*TP AS APPROPRIATE, LID COLOR SHALL COINCIDE WITH TYPE OF UTILITY.
2. MAXIMUM DISTANCE BETWEEN TRACER WIRE POINT OF CONTACT SHALL BE 500'.
3. ATTACH TRACER WIRE TO PIPE AT 6' INTERVALS.

QUAD CITY STANDARD DETAIL	TRACER WIRE STATION	REVISED: 3/16	DETAIL No. 319Q-2

VAULT DIMENSION DETAILS (MINIMUM)				
METER SIZE	3"	4"	6"	8"
(A)	8'-4"	10'-6"	12'	15'
(B)	4'-4"	5'	5'	6'
HATCH				
(A)	6'	6'	6'	6'
(B)	3'	3'	4'	4'

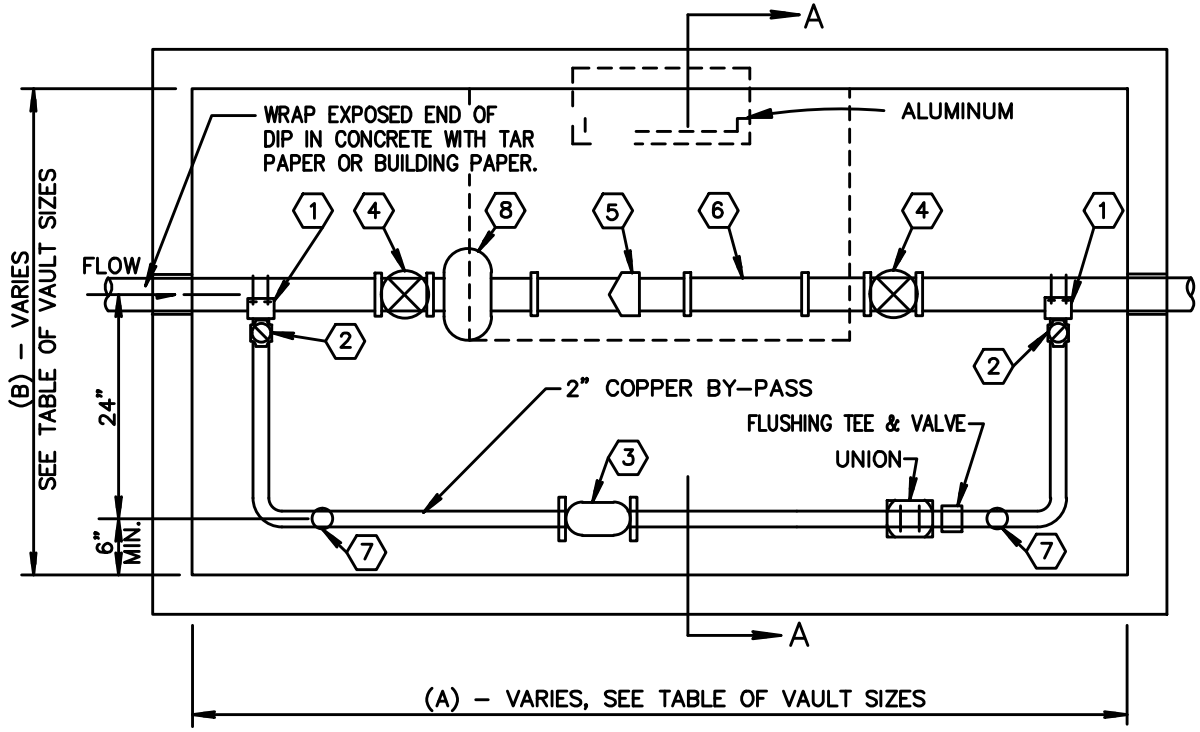

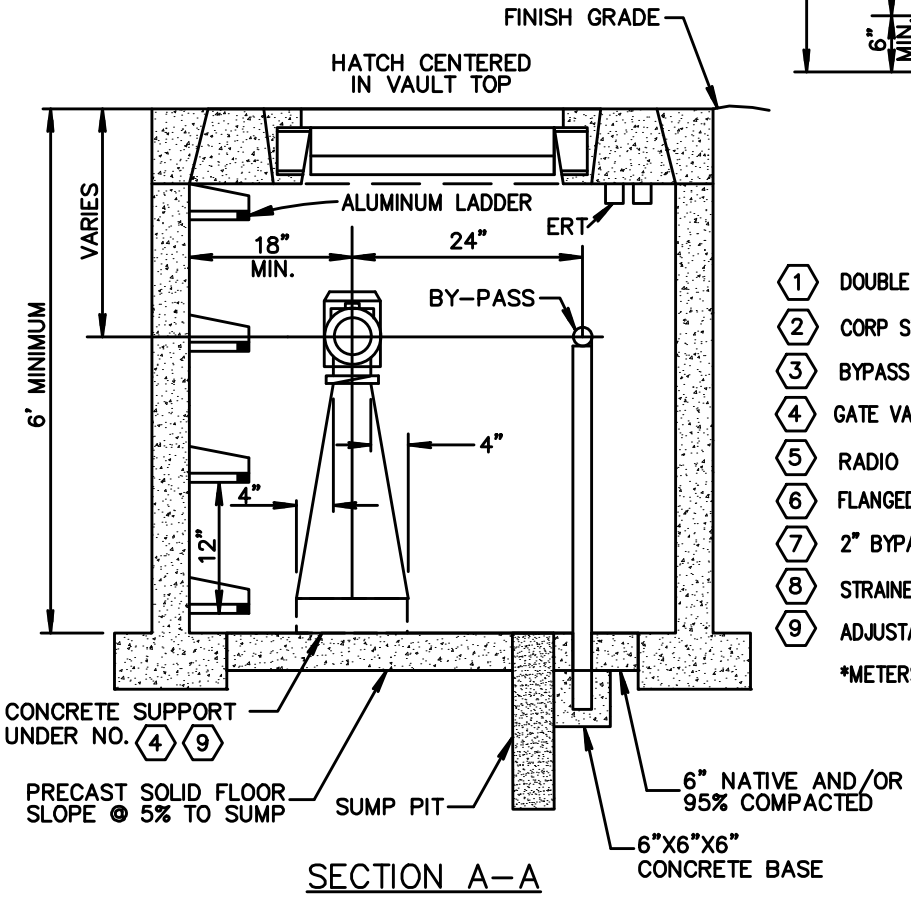

SECTION A–A

1. DOUBLE STRAP ALL BRONZE SADDLE
2. CORP STOP 2" BALL TYPE
3. BYPASS METER*
4. GATE VALVE R/S FLANGED WITH HAND WHEEL
5. RADIO READ* METER PER AGENCY
6. FLANGED SPOOL (MIN. 3 PIPE DIAMETERS IN LENGTH)
7. 2" BYPASS SUPPORT
8. STRAINER
9. ADJUSTABLE PIPE SUPPORT

*METERS TO BE SUPPLIED BY AGENCY

NOTES:

1. BOTH METERS SHALL BE RADIO READ WITH ERT MOUNTED WITHIN 6" OF FINISH GRADE.
2. METER VAULTS TO BE PRE-CAST CONCRETE.
3. JOINT RESTRAINT TO AND THROUGH REQUIRED.
4. SUMP PIT TO BE 8 CUBIC FEET OF CLEAN #57 ROCK AND LINED WITH FABRIC FILTER LINER MIRAFI TYPE 140NL OR APPROVED EQUAL.
5. ACCESS HATCH – USF FABRICATION INC. ALUMINUM SPRING OR TORSION BAR ASSISTED DOUBLE LIDS WITH 90 TO 180 DEGREE OPEN RANGE WITH RECESSED PADLOCK/HASP ASSEMBLY AND 30 PSF RATING.
6. PIPELINE PRODUCTS VL-100 EXTENDABLE LADDER. TELESCOPING LADDER MUST BE INSTALLED ON THE VERTICAL WALL JUST BELOW THE SAFETY NET. POSITION THE LADDER TO CENTER OF ACCESS HATCH OR EQUAL.
7. SAFETY NET – U.S. WEBBING SLING STD. EZ BARRIER OR APPROVED EQUAL.

QUAD CITY STANDARD DETAIL	LARGE METER AND VAULT	REVISED: 3/16	DETAIL No. 321Q

PLAN VIEW

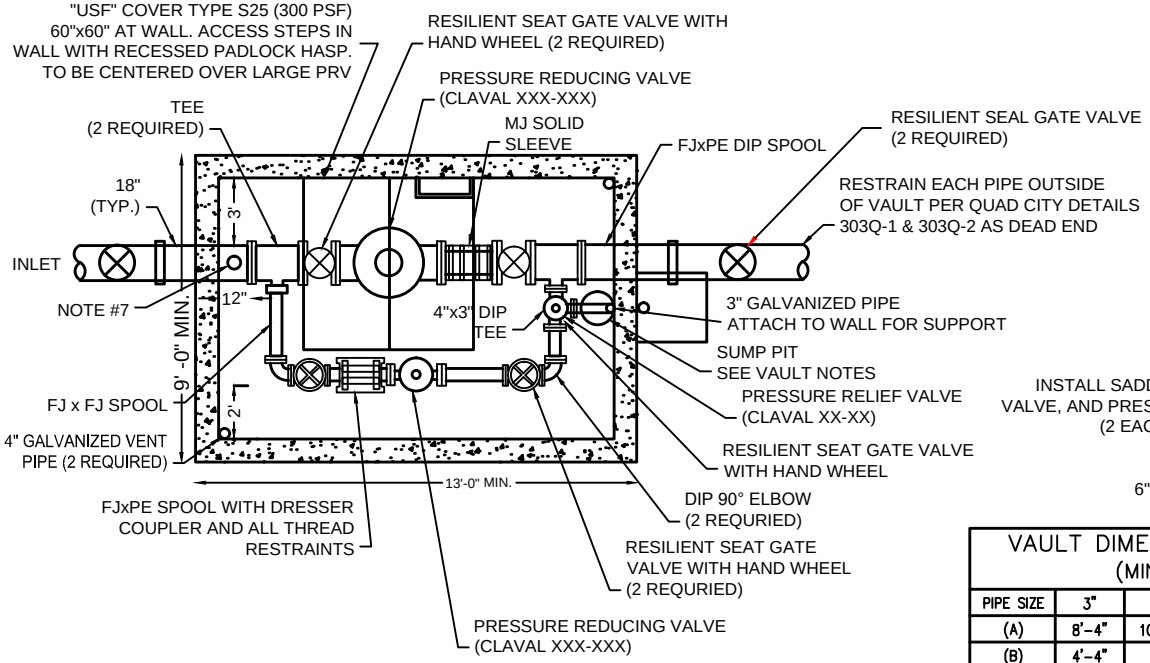

PROFILE VIEW

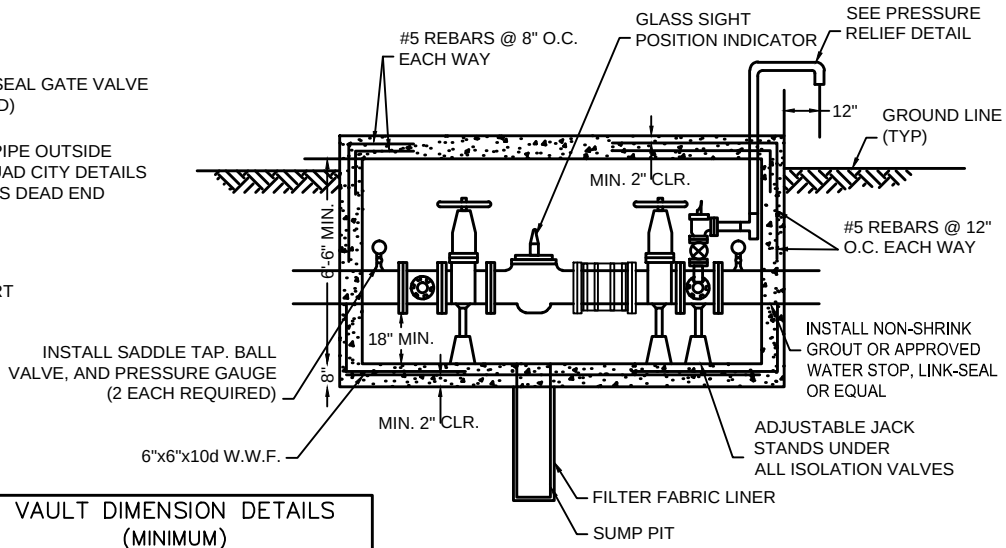

VAULT DIMENSION DETAILS (MINIMUM)				
PIPE SIZE	3"	4"	6"	8"
(A)	8'-4"	10'-6"	12'	15'
(B)	4'-4"	5'	6'	6'
HATCH				
(A)	6'	6'	6'	6'
(B)	4'	4'	5'	5'

VAULT NOTES:

1. ALL PRECAST OR POUR IN PLACE CONCRETE TO BE CLASS "A" PER M.A.G. STD. SPEC. 725. ALTERNATE DESIGN TO BE 8" C.M.U. WALLS, GROUT ALL CELLS SOLID, USE 2-#4 REBAR IN BOND BEAM AT TOP OF WALLS AND AT 30" ABOVE FOOTING. #4 REBAR AT 16" O.C. VERTICAL.
2. SUMP PIT TO BE 8 CUBIC FEET OF CLEAN #57 ROCK AND LINED WITH FABRIC FILTER LINER MIRAFI TYPE 14ONL OR APPROVED EQUAL.
3. ALL FITTINGS AND VALVES TO BE FLANGE JOINT DUCTILE IRON PIPE.
4. SLOPE FLOOR AT 5% TO SUMP.
5. ACCESS HATCH - USF FABRICATION INC. ALUMINUM SPRING OR TORSION BAR ASSISTED DOUBLE LIDS WITH 90 TO 180 DEGREE OPEN RANGE WITH RECESSED PADLOCK/HASP ASSEMBLY AND 30 PSF RATING.
6. PIPELINE PRODUCTS VL-100 EXTENDABLE LADDER. TELESCOPING LADDER MUST BE INSTALLED ON THE VERTICAL WALL JUST BELOW THE SAFETY NET. POSITION THE LADDER TO CENTER OF ACCESS HATCH OR EQUAL.
7. 2" SADDLE WITH 2" BALL VALVE & 2" PLUG. THIS IS USED FOR FLOW MODELING & INSERTION PROBES.
8. SAFETY NET - U.S. WEBBING SLING STD. EZ BARRIER OR APPROVED EQUAL.

VALVE NOTES:

1. PRESSURE REDUCING CLAVAL SHALL INCLUDE THE FOLLOWING FEATURES:
   A. X46A FLOW CLEAN STRAINER
   B. CK2 COOK (ISOLATION VALVE)
   C. CV SPEED CONTROL (OPENING & CLOSING)
   D. ALL PRV PILOT SYSTEMS MUST BE STAINLESS STEEL HIGH PRESSURE TUBING.
2. FINAL PRESSURE SETTINGS TO BE DETERMINED BY AGENCY

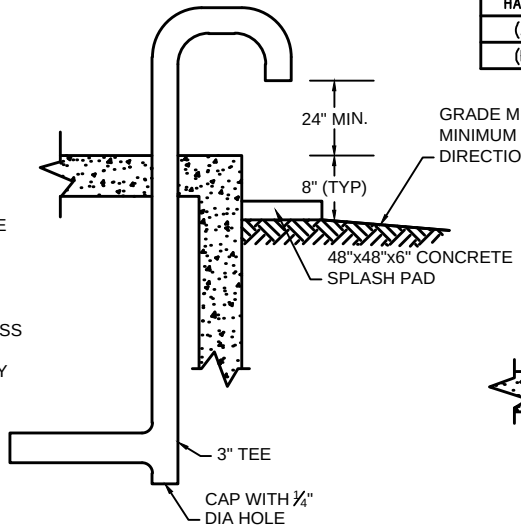

PRESSURE RELIEF DETAIL

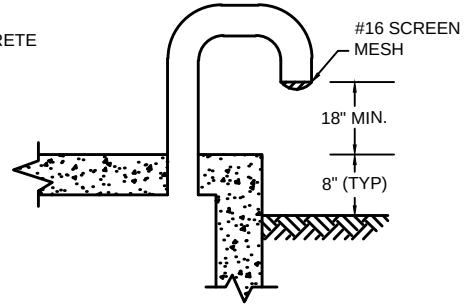

4" VENT PIPE DETAIL

QUAD CITY STANDARD DETAIL	PRESSURE REDUCING VALVE STATION	REVISED: 3/16	DETAIL No. 323Q

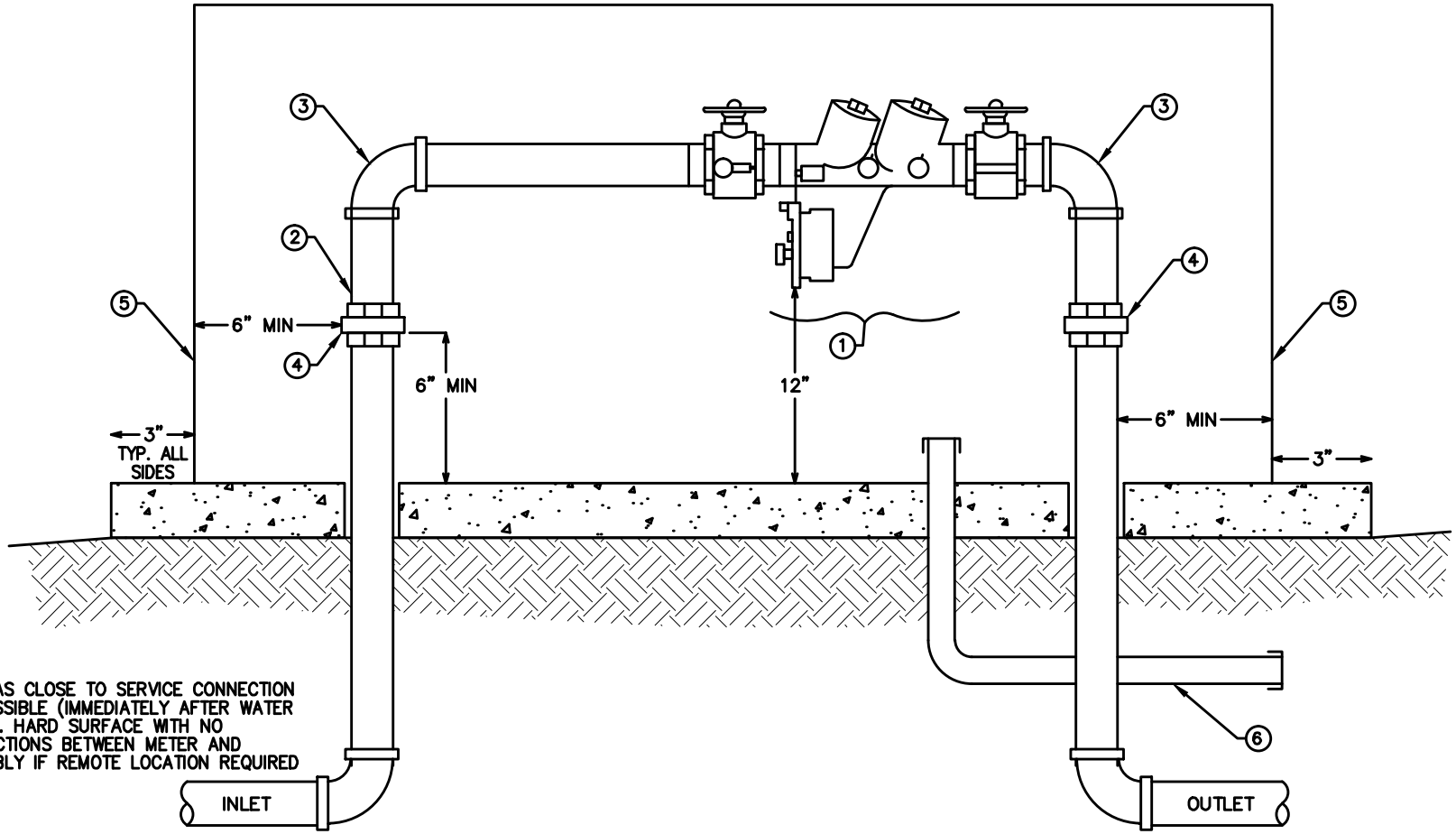

INLET AS CLOSE TO SERVICE CONNECTION AS POSSIBLE (IMMEDIATELY AFTER WATER METER). HARD SURFACE WITH NO CONNECTIONS BETWEEN METER AND ASSEMBLY IF REMOTE LOCATION REQUIRED

NOTES:

1. ALL PIPE/FITTINGS TO BE TYPE "K" COPPER.
2. BACKFLOW PREVENTION ASSEMBLY MUST BE LEVEL AND INSTALLED A MINIMUM OF 16" FROM ASSEMBLY BODY TO FINAL GRADE.
3. ALL TEST COCKS (4 REQUIRED) SHALL BE FITTED WITH BRASS PLUGS INSTALLED WITH TEFLON TAPE.
4. COMPRESSION TYPE FITTINGS ARE NOT ALLOWED.
5. INSTALL THE BACKFLOW PREVENTION ASSEMBLY IMMEDIATELY DOWNSTREAM OF THE AGENCY WATER METER.
6. CALL FOR UNDERGROUND INSPECTION BEFORE BACKFILLING TRENCH.
7. A COPPER/BRASS UNION MUST BE INSTALLED IN THE MIDDLE OF BOTH RISERS.
8. ASSEMBLY SHALL BE APPROVED BY USC FOUNDATION FOR CROSS-CONNECTION CONTROL AND HYDRAULIC RESEARCH.

LIST OF MATERIALS:

① REDUCED PRESSURE BACKFLOW PREVENTION ASSEMBLY, BALL VALVES INCLUDED.
② DOUBLE CHECK VALVE BACKFLOW PREVENTION ASSEMBLY USE SHALL BE REVIEWED AND APPROVED BY AGENCY.
③ PIPE, TYPE "K" HARD COPPER, ¾" THRU 3".
④ 90° ELL, COPPER, ¾" THRU 3"
⑤ PIPE UNION, BRASS OR COPPER.
⑥ INSTALL 4" CONCRETE PAD, ENCLOSURE, AND HARDWARE. ENCLOSURE SHALL BE AN ASSE 1060 CLASS 1 APPROVED.
⑦ ELECTRICAL CONDUIT FOR HEAT TRACE.

QUAD CITY STANDARD DETAIL	BACKFLOW PREVENTION ASSEMBLY INSTALLATION 3" AND UNDER	REVISED: 3/16	DETAIL No. 324Q-1

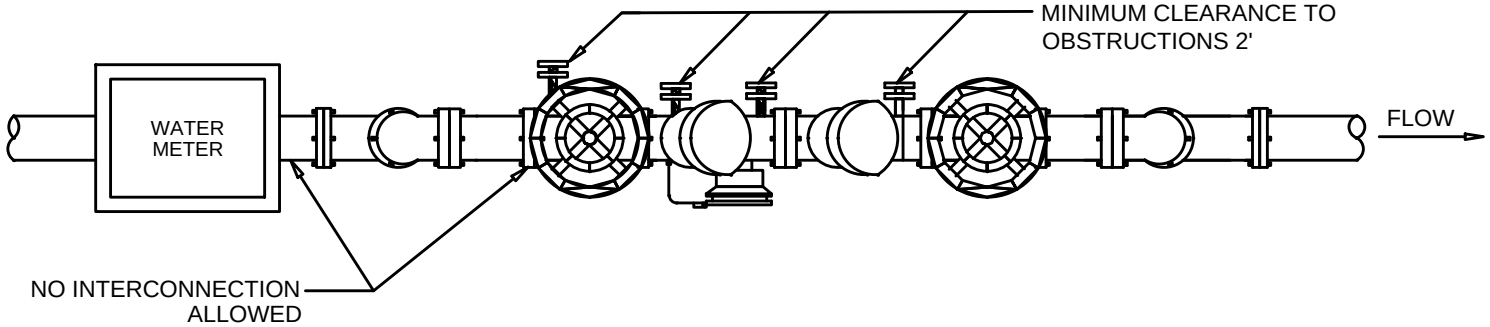

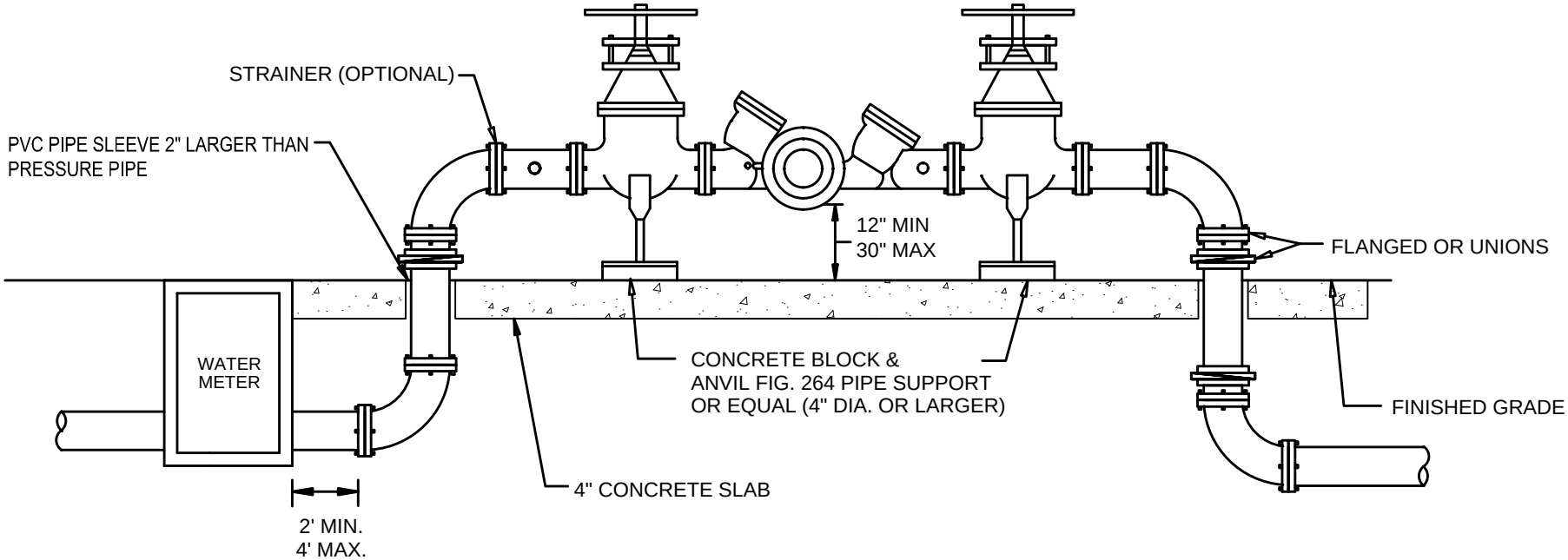

NOTES:

1. NO OBSTRUCTIONS ON ONE SIDE.
2. BACKFLOW PROTECTION REQUIRED PER CITY/TOWN CODE.
3. ENCLOSURE REQUIRED (ASSE 1060 CLASS 1).
4. ALL CONNECTIONS SHALL BE FLANGED OR MECHANICALLY RESTRAINED JOINTS.
5. THERE SHALL NOT BE ANY CONNECTIONS ON THE SERVICE LINE BETWEEN THE RP AND THE WATER METER. ENCLOSURES INSTALLED MUST MEET CLEARANCE REQUIREMENTS IN ADDITION TO PROVIDING SIDE AND TOP ACCESS. ENCLOSURES MUST NOT RETAIN WATER.
6. THE ASSEMBLY SHALL BE ACCESSIBLE AT ALL TIMES.
7. DISTANCE FROM THE BOTTOM OF PRESSURE RELIEF VALVE TO THE FINISHED GRADE SHALL BE A MINIMUM OF TWICE THE DIAMETER OF THE ASSEMBLY PIPING. MINIMUM HEIGHT 12".
8. INSTALLATION MUST MEET INTERNATIONAL PLUMBING CODES IN ADDITION TO STANDARD WATER DETAILS. INSTALLATION MUST BE LEFT EXPOSED UNTIL INSPECTED AND APPROVED BY THE CITY/TOWN.
9. RP SHALL BE LOCATED ABOVE GROUND AND ENCLOSED IN AN ASSE 1060 CLASS 1 APPROVED ENCLOSURE PER INTERNATIONAL BUILDING CODES.
10. RP SHALL BE LOCATED WITHIN 4' OF METER, UNLESS OTHERWISE APPROVED.
11. DOUBLE CHECK VALVE BACKFLOW PREVENTION ASSEMBLY USE SHALL BE REVIEWED AND APPROVED BY AGENCY.
12. ASSEMBLY SHALL BE APPROVED BY USC FOUNDATION FOR CROSS-CONNECTION CONTROL AND HYDRAULIC RESEARCH.

QUAD CITY STANDARD DETAIL	BACKFLOW PREVENTION ASSEMBLY INSTALLATION 4" AND LARGER	REVISED: 3/16	DETAIL No. 324Q-2

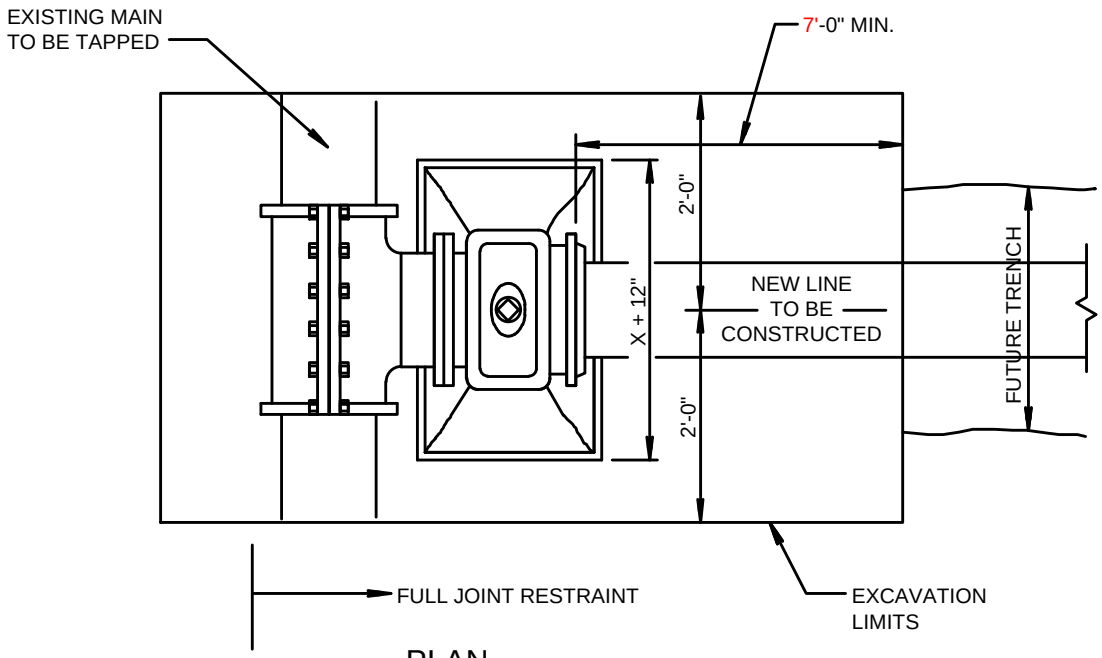

PLAN

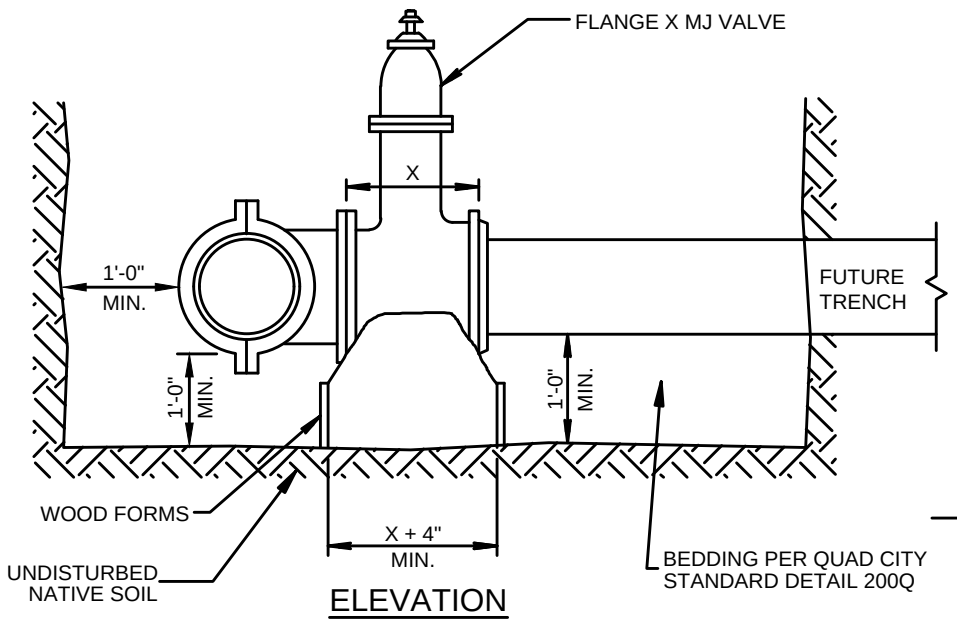

ELEVATION

PLAN SYMBOL

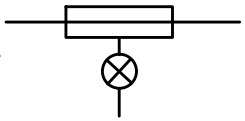

NOTES:

1. VALVE BLOCKING PER QUAD CITY STANDARD DETAIL 301Q.
2. TAPS SHALL BE MADE BY CITY/TOWN CREWS AT PREVAILING RATES OR BY APPROVED CONTRACTORS WHEN ALLOWED BY CITY/TOWN.
3. INSTALL TEMPORARY BLOCKING UNDER VALVE BEFORE TAP IS MADE. ALL FLANGE BOLTS SHALL BE CLEAR OF FOOTING.
4. TAPPING SLEEVES SHALL BE FORD FTSS, ROMAC SST III OR APPROVED EQUAL.
5. INSTALLATION SHALL BE LEAK TESTED TO A MINIMUM OF 200 PSI FOR 30 MINUTES PRIOR TO TAP.
6. TAPPING SLEEVE SHALL BE PLACED AT A MINIMUM OF 3' FROM ANY BELL, COUPLING, VALVE, FITTING, OR OTHER OBSTRUCTION.
7. PROTECT ALL CONCRETE CONTACT AREAS WITH 8 MIL SHEET PLASTIC.
8. JOINT RESTRAINT PER QUAD CITY STANDARD DETAIL 303Q USING A DEAD END ON NEW CONSTRUCTION.
9. INSTALL BOX, COVER, AND VALVE BOX STABILIZER PER AGENCY REQUIREMENTS.
10. ALL EXCAVATIONS SHALL BE OSHA COMPLIANT.
11. ALL PIPE, VALVES, FITTINGS, AND APPURTENANCES SHALL BE MANUFACTURED IN THE U.S.A.
12. MIN. EXCAVATION LENGTH FOR THE TAPPING OPERATION SHALL BE 5' FROM THE FACE OF VALVE

QUAD CITY STANDARD DETAIL	TAPPING SLEEVES AND VALVES	REVISED: 3/16	DETAIL No. 340Q-1

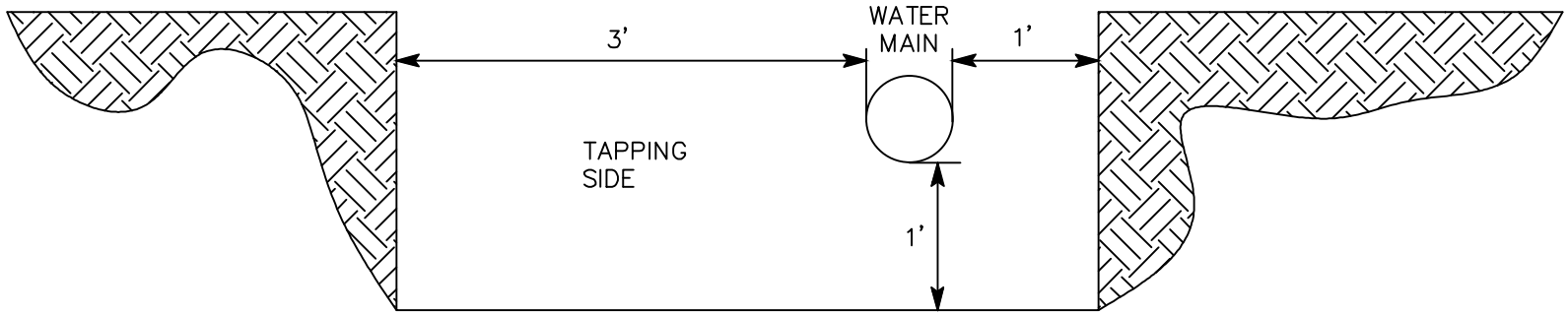

NOTE
CONTRACTOR TO EXPOSE AND MAINTAIN TRENCH/EXCAVATION PER OSHA REGULATIONS.

3/4" THROUGH 2" SERVICE TAP

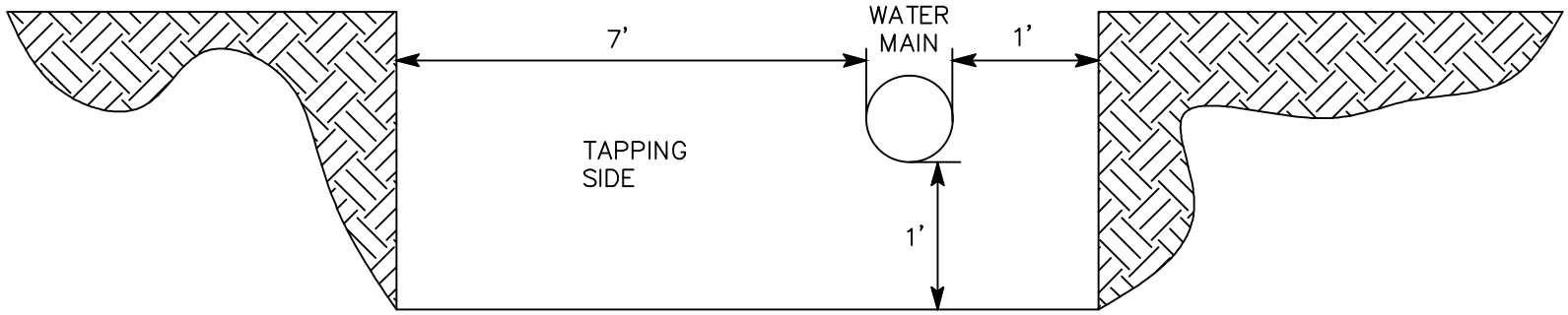

NOTE
CONTRACTOR TO EXPOSE AND MAINTAIN TRENCH/EXCAVATION PER OSHA REGULATIONS.

3" THROUGH 12" SERVICE TAP

NOTE
ALL TRENCHES FOR SERVICE TAPS SHALL BE MINIMUM 3' WIDE.

QUAD CITY STANDARD DETAIL	EXPOSING WATER MAIN FOR HOT TAP	REVISED: 3/16	DETAIL No. 340Q-2

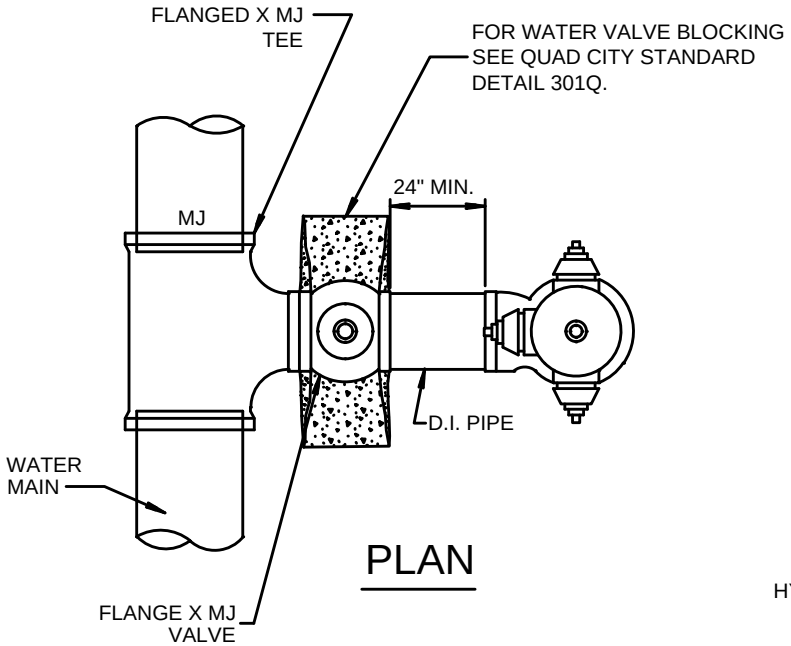

PLAN

NOTES:

1. ALL HYDRANTS WHICH ARE PRIVATELY MAINTAINED AND OWNED ARE TO BE PAINTED RED.
2. ALL HYDRANTS TO BE WATEROUS, MUELLER OR CLOW.
3. HYDRANT LEADS SHALL HAVE NO HORIZONTAL BENDS.
4. TRACER WIRE SHALL CONFORM TO QUAD CITY STANDARD DETAIL 319Q-1
5. FULLY RESTRAIN HYDRANT LEAD AND HYDRANT. THRUST BLOCKS ARE NOT ALLOWED.
6. INSTALL TRACER WIRE STATION PER QUAD CITY STANDARD DETAIL 319Q-2.
7. SEE QUAD CITY STANDARD DETAIL 363Q FOR VERTICAL ADJUSTMENT.
8. ALL DUCTILE IRON PIPE AND FITTINGS SHALL BE MANUFACTURED IN THE U.S.A.
9. 4.5" PUMPER CONNECTION TO FACE CURB.
10. MAXIMUM OF 1 HYDRANT EXTENSION - ORIGINAL MANUFACTURER.

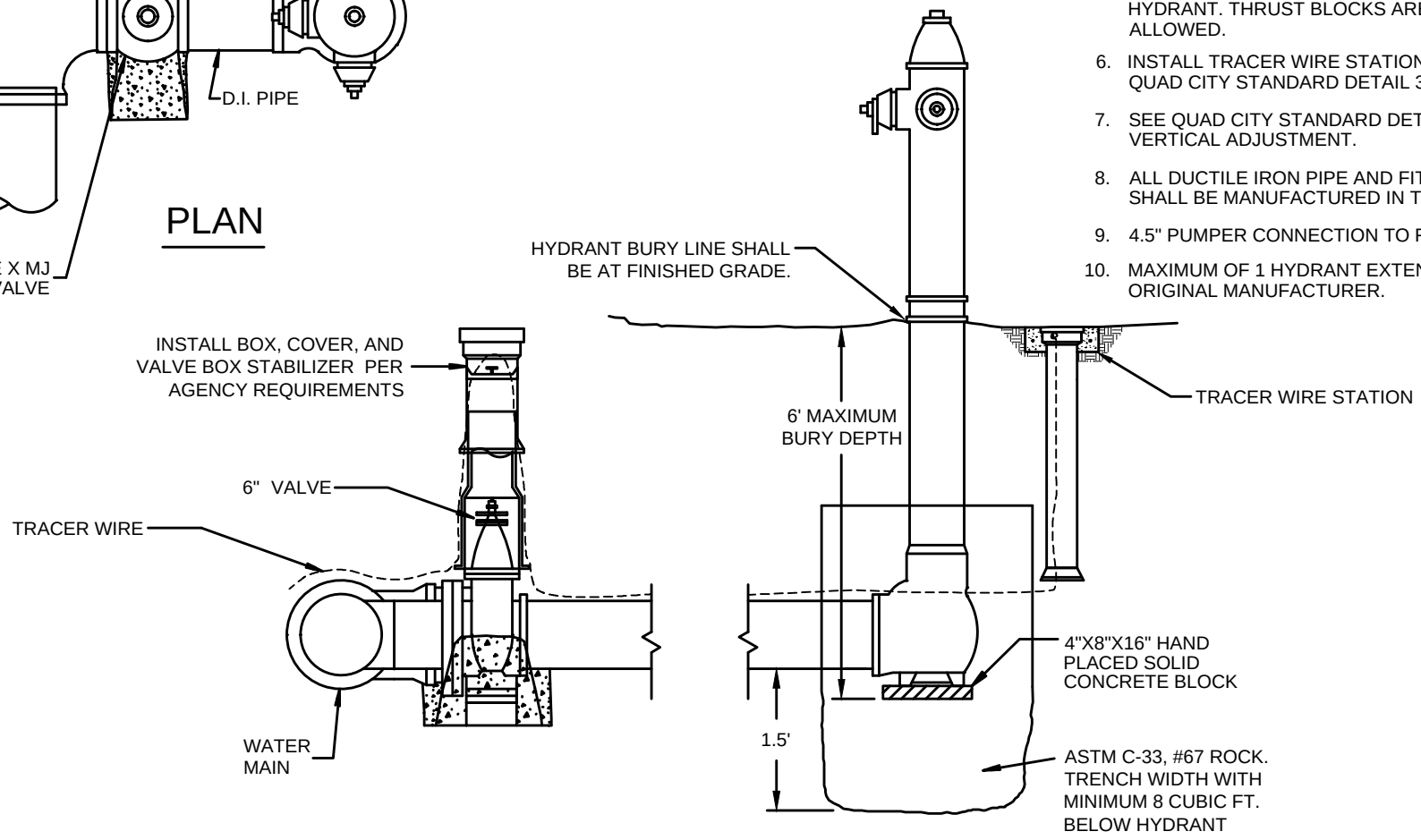

PROFILE

QUAD CITY STANDARD DETAIL	FIRE HYDRANT INSTALLATION	REVISED: 3/16	DETAIL No. 360Q

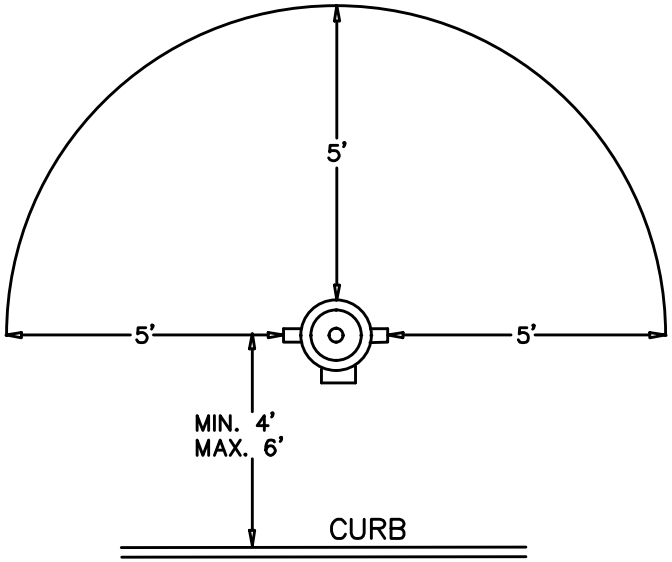

HYDRANT OBSTRUCTION CLEARANCE

NOTES:

1. OBSTRUCTIONS SUCH AS UTILITY POLES, STREET SIGNS, IRRIGATION BOXES, FENCES, LANDSCAPE VEGETATION, ETC. MUST NOT BE PLACED BETWEEN CURB AND HYDRANT
2. SOME LOCATIONS APPLY AT EITHER END OF CURB RETURNS.
3. ALL HYDRANTS WHICH ARE PRIVATELY MAINTAINED AND OWNED ARE TO BE PAINTED RED.
4. IN PARKING LOT ISLANDS, HYDRANT TO BE MIN. 3' IN ALL DIRECTIONS FROM BACK OF CURB.
5. HYDRANTS TO BE CLEAR OF LANDSCAPE & VEGETATION WITHIN A 5' RADIUS.

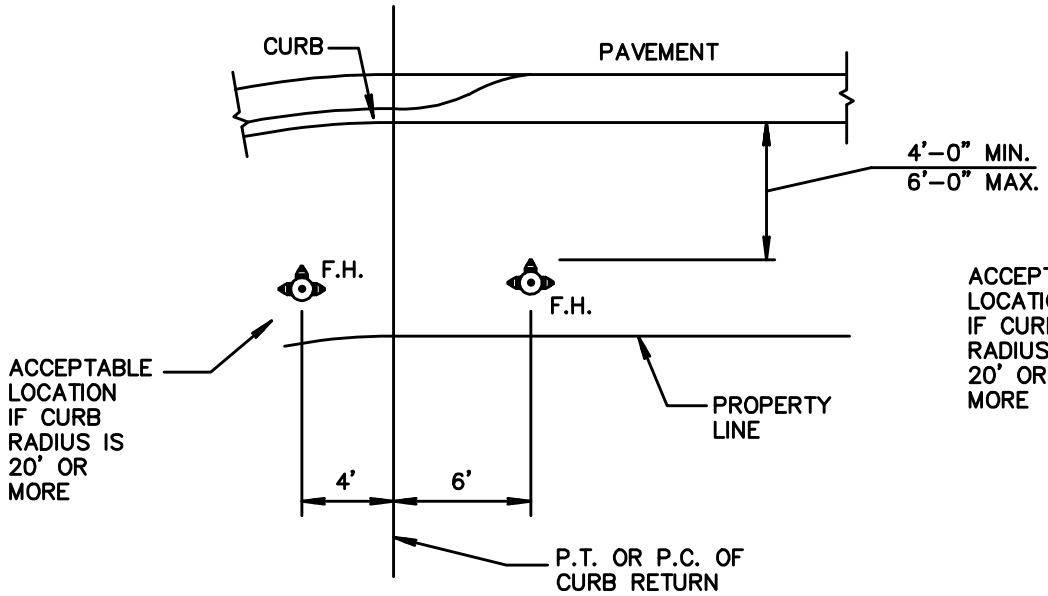

PARKWAY AREA OR NO SIDEWALK

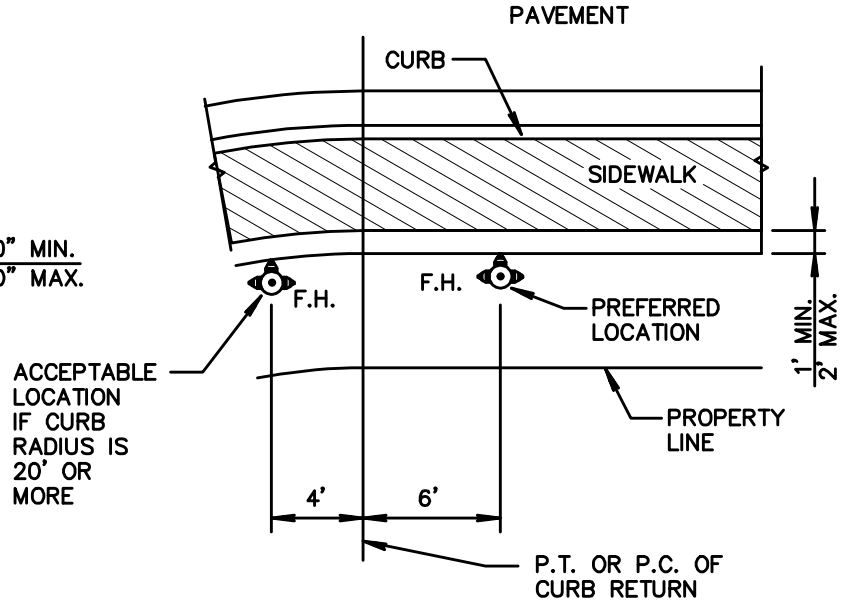

AREA WITH SIDEWALK

QUAD CITY STANDARD DETAIL	LOCATIONS FOR NEW FIRE HYDRANTS	REVISED: 3/16	DETAIL No. 362Q

NOTES:

1. THIS DETAIL IS FOR VERTICAL DEFLECTION ONLY. REFER TO QUAD CITY STANDARD DETAIL 360Q FOR HYDRANT DETAILS.
2. MECHANICALLY RESTRAIN ALL JOINTS FROM HYDRANT TO HYDRANT TEE.
3. INSTALL TRACER WIRE STATION PER QUAD CITY STANDARD DETAIL 319Q-2.
4. ALL PIPE, VALVES, FITTINGS, AND APPURTENANCES SHALL BE MANUFACTURED IN THE U.S.A.

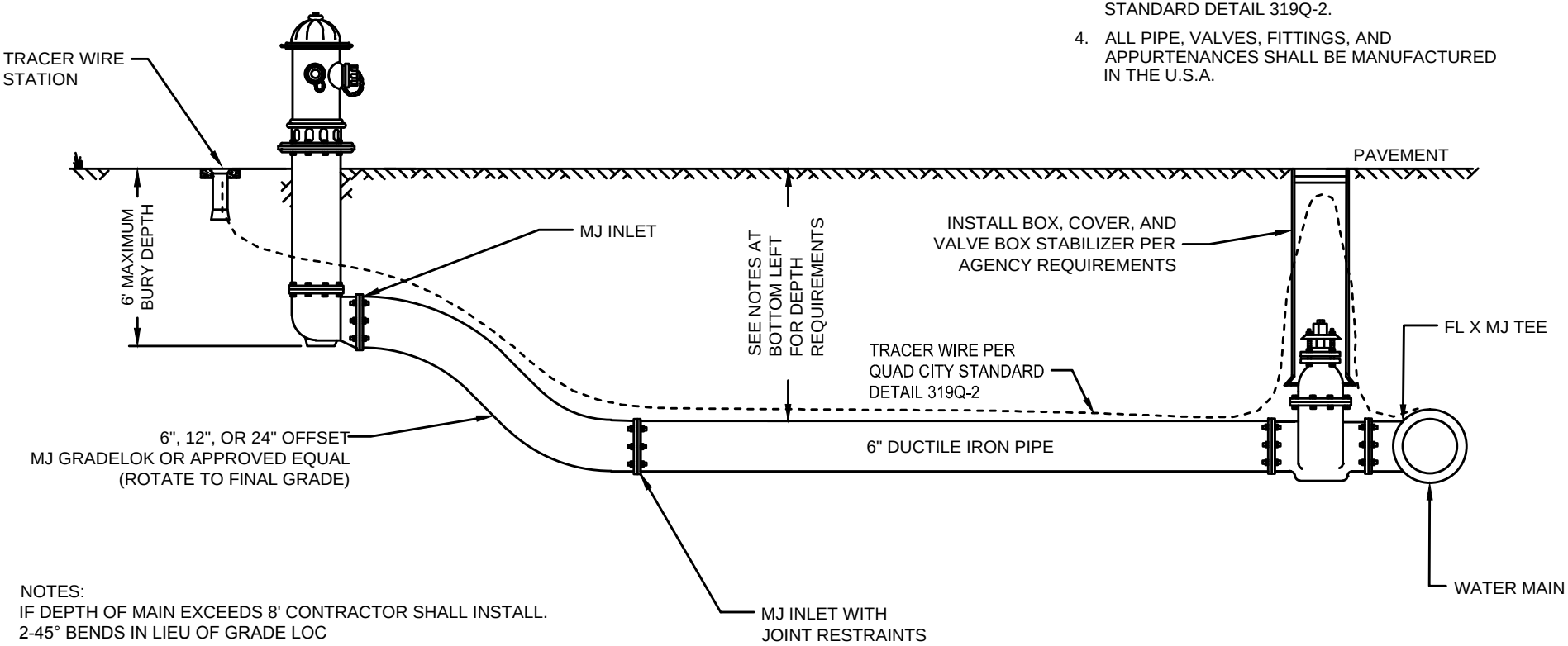

NOTES:
IF DEPTH OF MAIN EXCEEDS 8' CONTRACTOR SHALL INSTALL.
2-45° BENDS IN LIEU OF GRADE LOC

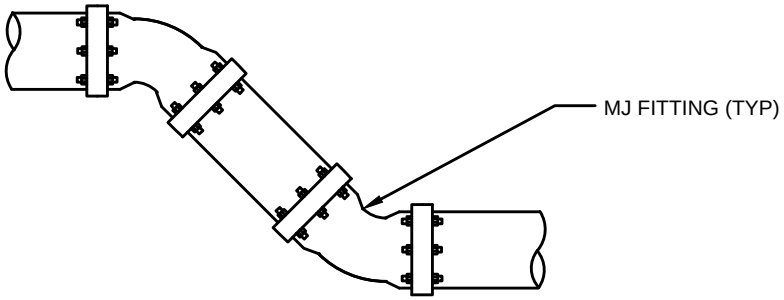

NOT TO SCALE

QUAD CITY STANDARD DETAIL	FIRE HYDRANT VERTICAL DEFLECTION	REVISED: 3/16	DETAIL No. 363Q

PROTECTION POLE PLACEMENT

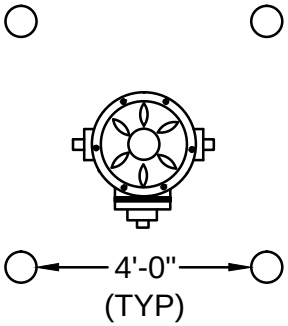

NOTES:

1. DO NOT PLACE POLES IN FRONT OF NOZZLE.
2. POLES MAY BE CHANGED IN NUMBER AND ARRANGEMENT DEPENDING ON INDIVIDUAL NEED.
3. REQUIRED AT SPECIFIED LOCATIONS ONLY.
4. POLE SHALL BE SCHEDULE 40 4" STEEL.
5. PAINT POLE YELLOW AND PLACE 3 - 3" RED REFLECTIVE BANDS.

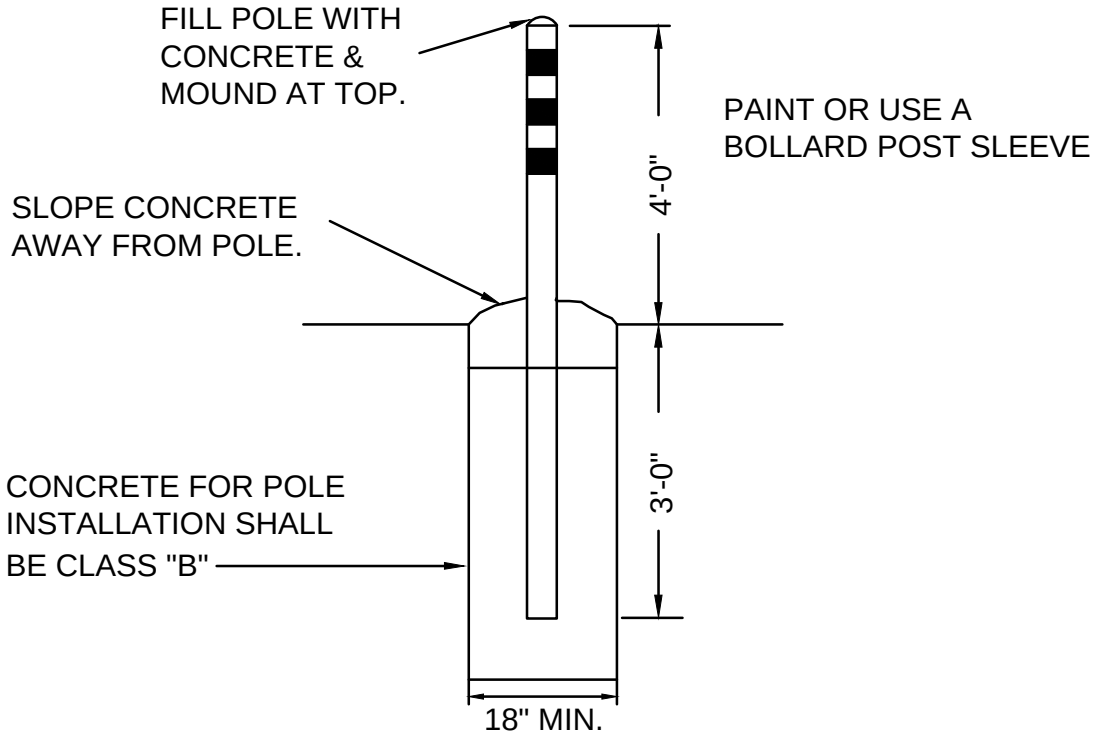

COP STANDARD DETAIL	FIRE HYDRANT PROTECTION POLE	CITY ENGINEER	REVISED: 01/15	DETAIL No. 364P

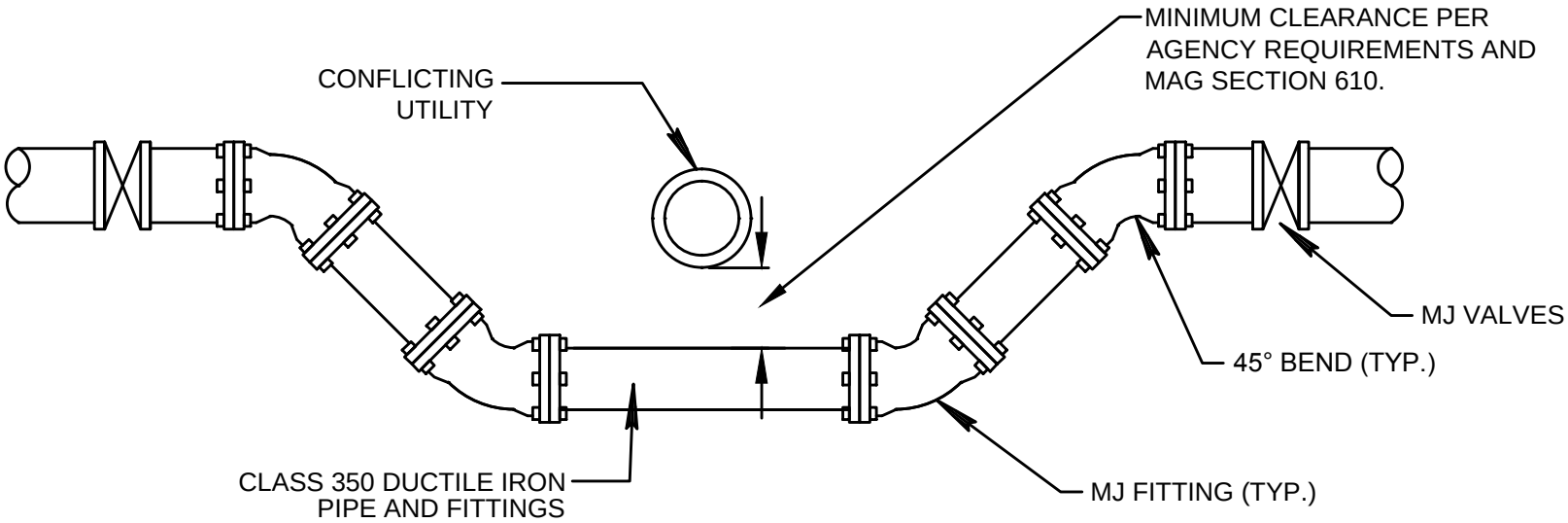

1. ALL PIPE, VALVES, FITTINGS, AND APPURTENANCES SHALL BE MANUFACTURED IN THE U.S.A.
2. ENTIRE VERTICAL REALIGNMENT SHALL BE MECHANICALLY RESTRAINED CL. 350 D.I.P. PER QUAD CITY DETAILS 303Q-1 AND 303Q-2. RESTRAINED LENGTHS FROM VALVES SHALL BE THE SAME AS DEAD ENDS ON NEW CONSTRUCTION.
3. BOTTOM OF VERTICAL ALIGNMENT SHALL BE ONE PIECE. IF JOINTS ARE REQUIRED, WATER MAIN SEGMENT SHALL BE CENTERED BELOW PIPE OR IN A CASING PIPE.
4. NO SERVICE CONNECTIONS SHALL BE LOCATED WITHIN VERTICAL REALIGNMENT
5. AIR RELEASE VALVE TO BE INSTALLED ON THE VERTICAL REALIGNMENT AT THE HIGH POINT OF THE LOW SIDE.
6. VALVE(S) AND BLOCKING PER QUAD CITY STANDARD DETAIL 301Q (MJ VALVE, TYP.)

QUAD CITY STANDARD DETAIL	VERTICAL REALIGNMENT OF WATER MAINS	REVISED: 3/16	DETAIL No. 370Q

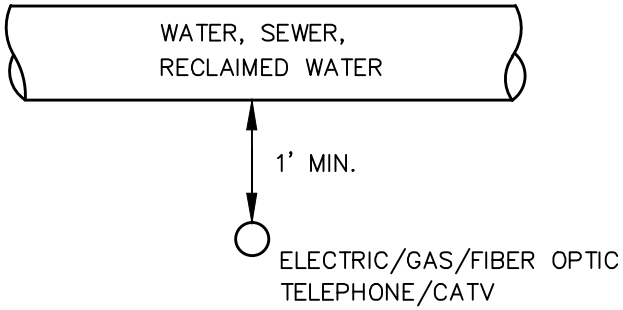

CROSSING

W = HORIZONTAL SEPARATION

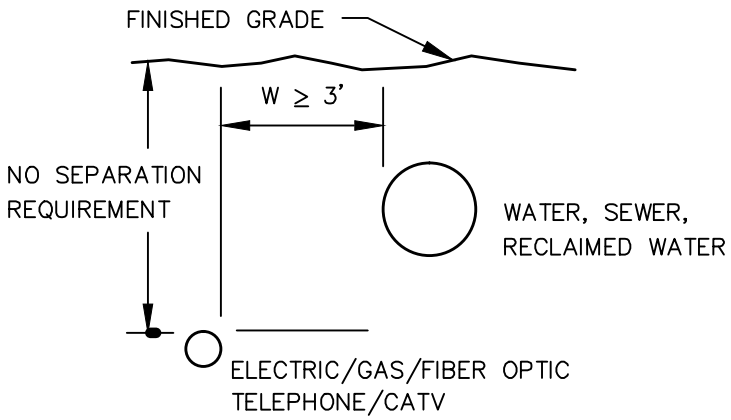

NOTES:

1. PRIMARY ELECTRIC, GAS, TELEPHONE, CABLE TV OR FIBER OPTIC LINES SHALL NOT CROSS ABOVE A WATER LINE WITHOUT WRITTEN TOWN APPROVAL.
2. LOCATION OF EXISTING WATER, SEWER AND RECLAIMED WATER LINES MUST BE POTHOLED TO VERIFY ACTUAL LOCATION PRIOR TO DESIGN/INSTALLATION.

PV STANDARD DETAIL	UTILITY SEPARATION	TOWN ENGINEER	REVISED: 3/16	DETAIL No. 371PV

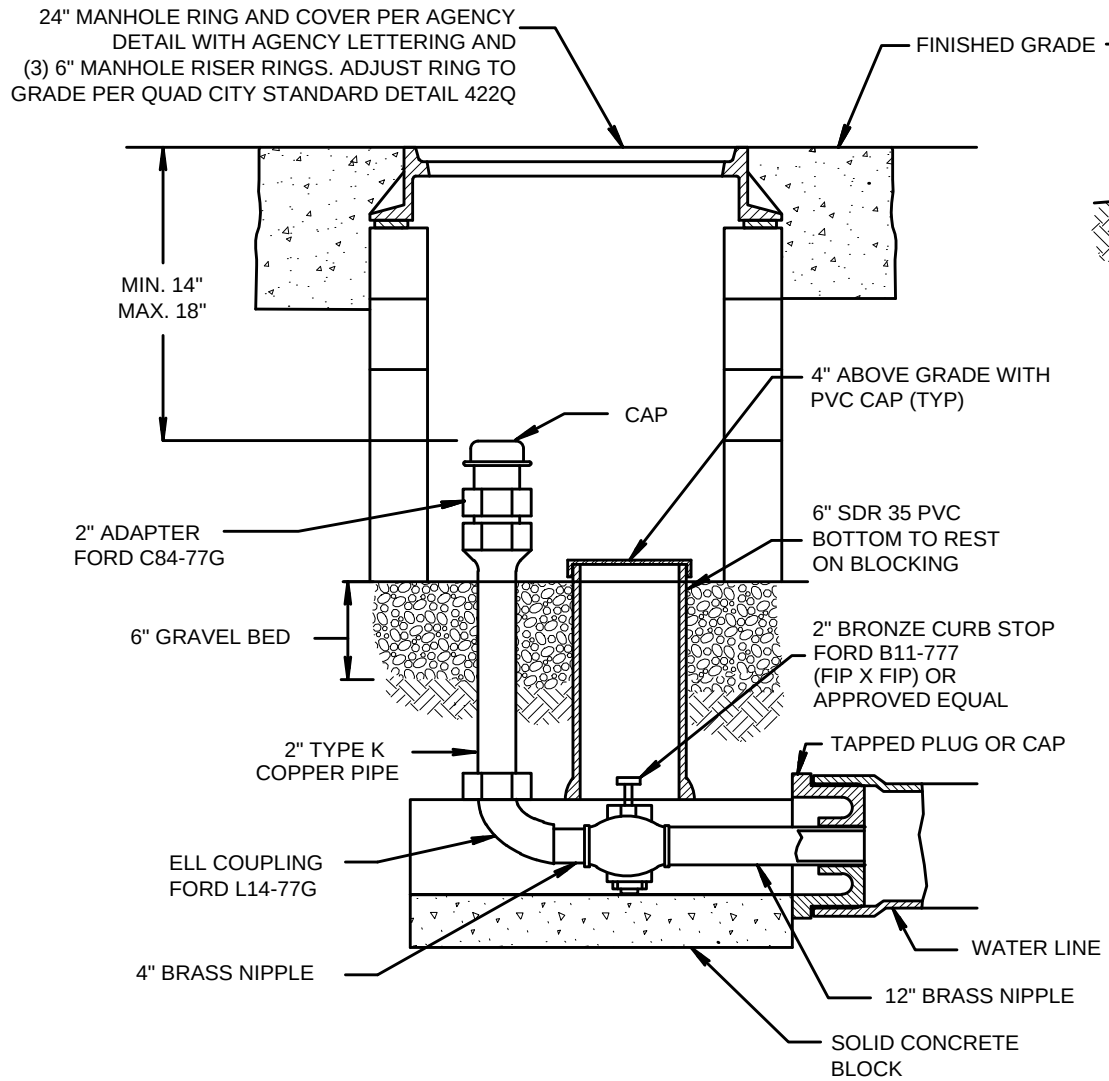

NOTE: ADD DEBRIS CAP PER MAG 392

TRAFFIC AREAS

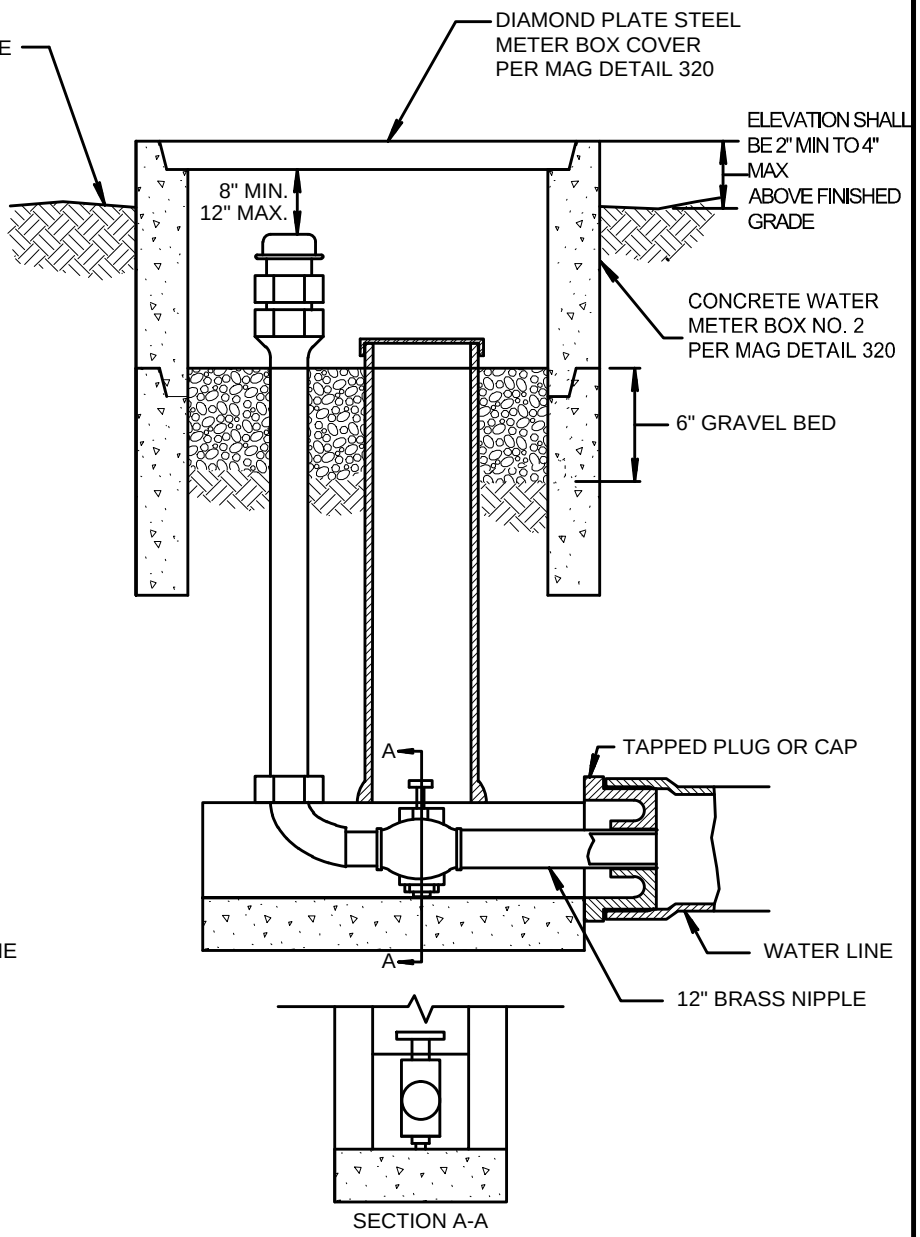

NON-TRAFFIC AREAS

QUAD CITY STANDARD DETAIL	BLOW OFF	REVISED: 3/16	DETAIL No. 390Q

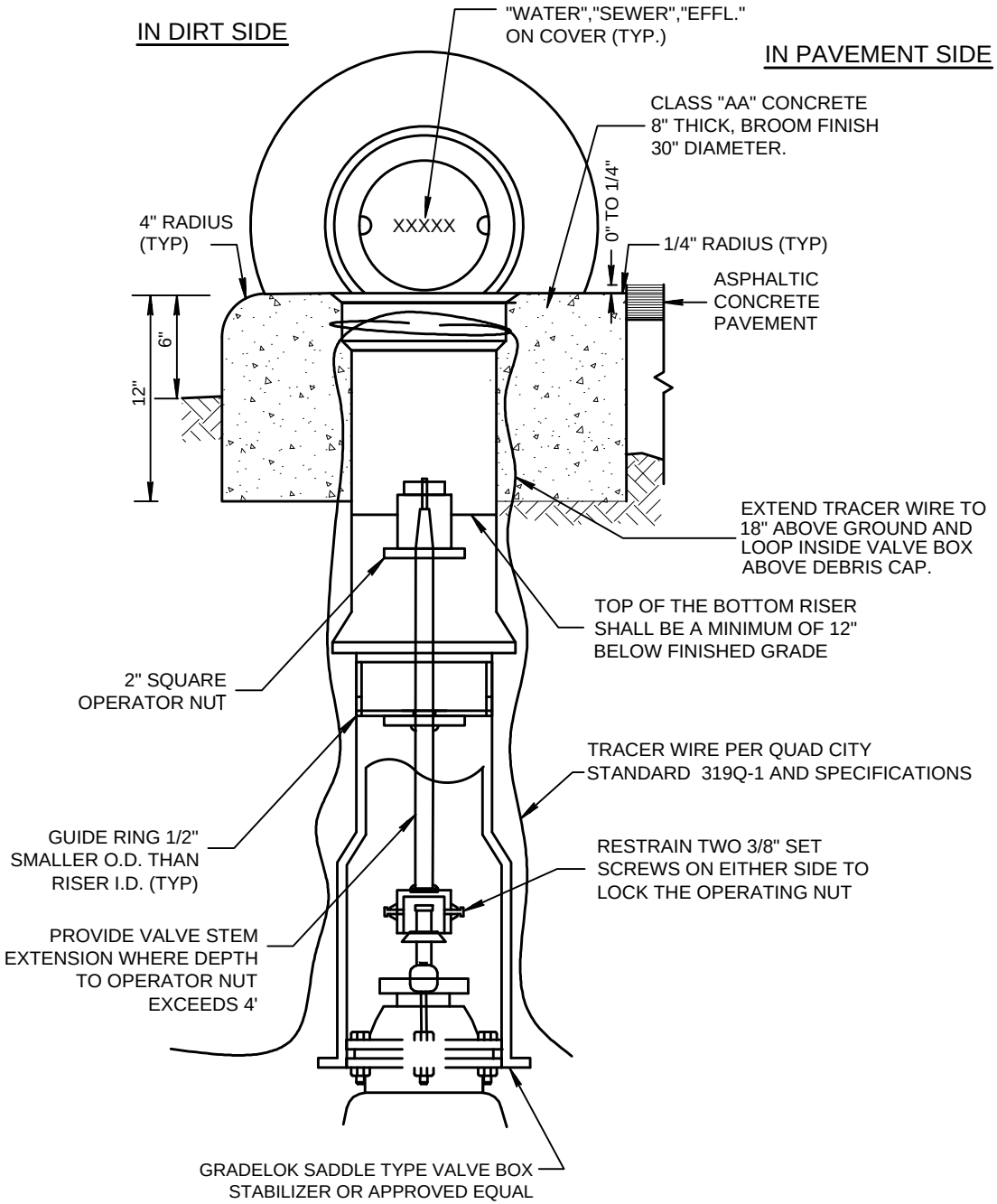

NOTES:

1. VALVE BOX SHALL BE ADJUSTED TO THE FINISHED GRADE AFTER PLACING OF THE FINISH PAVEMENT SURFACE.
2. USE PARKSON TYLER #6855, APCO OR EQUAL DEEP SKIRTED LID (4" OR MORE) TYPE, SLIDING ADJUSTABLE CAST IRON VALVE BOX C.I. MIN. T.S. 30,000 P.S.I.
3. ALL VALVES CONNECTED TO EXISTING MAINS ARE TO BE OPERATED BY AGENCY PERSONNEL ONLY.
4. U.S. MANUFACTURED IRON ONLY.
5. ALL STEEL FOR EXTENSION TO HAVE SHOP PRIME COAT ZINC CHROMATE, AND ONE HEAVY APPLICATION NO-OX-10 "A" IN ACCORDANCE WITH MANUFACTURE'S DIRECTION.
6. DEBRIS CAP PER MAG DETAIL 392.
7. VALVE BLOCKING REQUIRED PER QUAD CITY STANDARD DETAIL 301Q.

DEBRIS CAP COLOR TABLE

VALVE TYPE	COLOR
IN-LINE-RW	BLACK
HYDRANT	BLUE
BUTTERFLY	YELLOW
ZONE	RED
FIRE LINE	WHITE
EFFLUENT	PURPLE
SEWER FORCE MAIN	GREEN

QUAD CITY STANDARD DETAIL	VALVE BOX	REVISED: 3/16	DETAIL No. 391Q

REMOVAL AND DISPOSAL OF ASBESTOS CEMENT PIPE

1. Asbestos Cement Pipe (ACP) is a mixture of Portland Cement and asbestos fibers.

2. The Environmental Protection Agency (EPA) determined that asbestos, in an airborne condition, is a hazardous material and established laws/guidelines for the handling and disposal of the material. The Asbestos National Emission Standard for Hazardous Air Pollutants (NESHAP) establishes requirements for the removal and disposal of regulated asbestos containing materials. This PVSD establishes procedures and assigns responsibilities for the proper handling of ACP in conformance with the Asbestos NESHAP requirements currently in effect along with any other Federal, State, Local laws, rules and regulations including but not limited to MAG, ANSI, AWWA, EPA and OSHA standards

3. As used herein, the term "Town" shall refer to the Town of Prescott Valley or designated representative. The term "Excavator" shall refer to that entity (individual or contractor) which actually excavates and exposes the pipe. The term "Generator" means any owner or operator whose act or process produces asbestos containing waste material.

4. It is the intent of the Town to comply with the requirements of the Asbestos NESHAPS found at 40 CFR Part 61, Subpart M. This PVSD establishes procedures to be used by all Excavators in the removal and disposal of ACP in compliance with NESHAPS. Nothing in this PVSD shall be construed to void any provision of a contract or other law, ordinance, regulation or policy whose requirements are more stringent.

5. It is the intent of the Town that all ACP shall be removed in such careful and prudent manner that it remains intact and non-friable. The Excavator is responsible to employ those means, methods, techniques, and sequences to ensure this result.

6. The Excavator of non-hazardous ACP and the Generator of hazardous ACP is responsible for all identification measures, costs, notifications, documentation, proper handling, transportation, disposal of the material, etc. This would include costs to retain the services of a qualified, licensed asbestos abatement consultant, if required. Therefore, it is the policy of the Town that if the actions of the Excavator cause the material to become friable (hazardous), said Excavator becomes the Generator.

7. The Excavator shall not direct-bury any of the ACP without approval from the Town. If sections of ACP are to be left in the ground and abandoned in place, the Town / Consultant shall inspect the visible sections that remain to insure they are intact and non-friable. The ends of the ACP shall be encapsulated and any friable ACP shall be removed. ACP shall not be crushed and left in place. If ACP is crushed or otherwise caused to become friable, it shall be removed.

8. The Town / Consultant shall not direct the means, methods or sequence of work of the Excavator nor shall he/she be responsible for the Excavator's safety programs or procedures. Compliance with all aspects of worker safety and health regulations including but not limited to the OSHA Asbestos Standard is the responsibility of the Excavator. The Town assumes no responsibility for compliance programs, which are the responsibility of the Excavator. However, should the Town / Consultant determine the means, methods, sequences or safety measures are contrary to this PVSD or any applicable law, ordinance or regulation, the Town may issue a Stop Work Order which shall remain in effect until such time that the Excavator has made the necessary corrections

9. ACP must be disposed of at a landfill licensed and approved for acceptance of said products.

10. The Excavator shall provide documentation and certification to the Town detailing proper transport and disposal of ACP.

Utility Abandonment in Place

1. Abandonment in place of public utility lines shall be at the discretion of the Town, reviewed on a case by case basis, and shall be in accordance with these instructions.

2. Abandonment in Place of public utility infrastructure (water, sewer, reclaimed water) is based upon Town approval and shall be in accordance with the following:

   1) All requests to abandon utility pipe must be submitted in writing to the Utilities Department by formal letter or email and accompanied by 3 sets of drawings certified by an Engineer registered in the State of Arizona.

   2) Upon approval, the applicant shall provide to the Town an as-built Mylar drawing (24" x 36") with approval stamp and as-built certification by an Engineer registered in the State of Arizona.

   3) Plan view with profile is required.

   4) Abandoned pipes are not allowed if new pipe is being installed in the same easement or ROW.

   5) Survey grade GPS coordinates of the pipe are required. The coordinates shall designate start of pipe, any start and finish of bends, and end of pipe.

   6) The ends of the pipe must be plugged with waterproof grout or sealed with a manufactured cap made for such purposes.

   7) Abandonment not allowed for the following infrastructure:
      - Manholes
      - Valves *
      - Cleanouts
      - Pressure Reducing Valves *
      - Air Release Valves *
      - Meters *
      - Meter boxes *
      - Fire Hydrants *
      - Blow-Offs *

   *Salvage and arrange for the above materials to be picked up by the Town' maintenance and operations contract operator unless otherwise directed.

   8) Abandon unused sanitary sewer laterals in place from back of the Right-of-Way (ROW) to the main. The end of the pipe must be plugged with waterproof grout or sealed with a manufactured cap made for such purposes. Survey grade GPS coordinates of the end of the pipe is required.

   9) Abandon unused water service lines in place from the face of the ROW to the main. Isolate corp-stop and cut a segment of the copper tubing within six (6) inches of the corp-stop. Also, remove meter setter and box at curb. To abandon connections larger than two (2) inches, a mechanical fitting, cap, plug or valve must be installed as part of the abandonment.

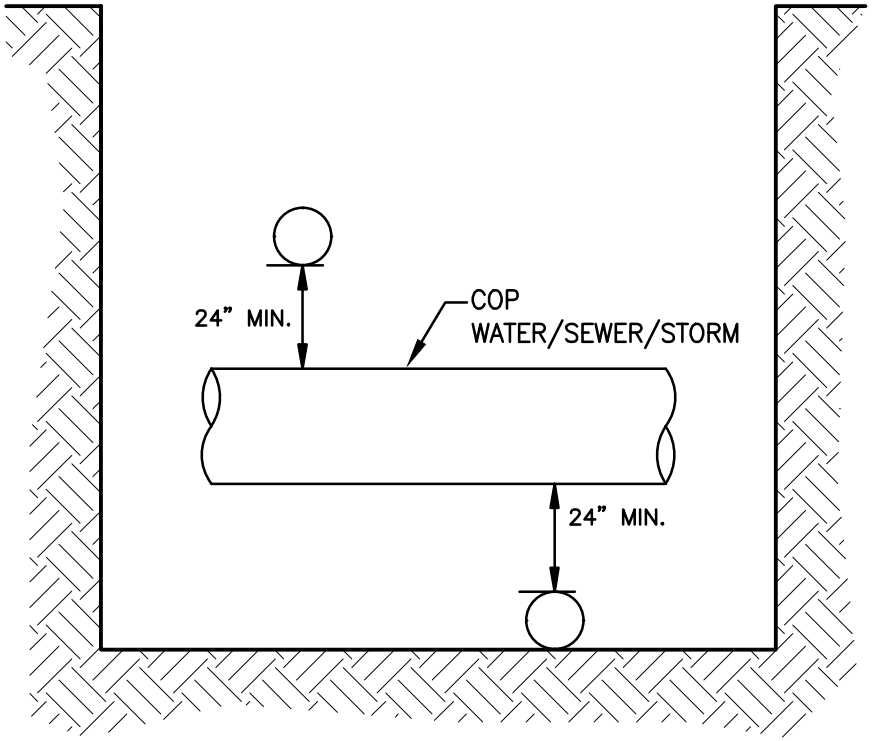

VERTICAL CLEARANCE

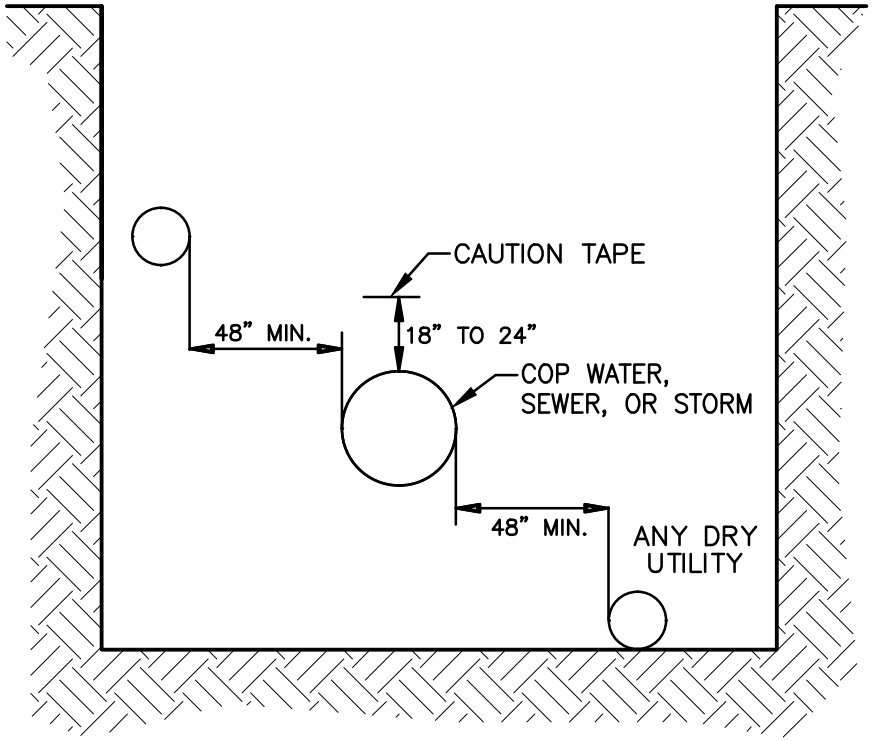

HORIZONTAL CLEARANCE

COP STANDARD DETAIL	DRY UTILITY SEPARATION	CITY ENGINEER	REVISED: 01/15	DETAIL No. 402P

WATER LINE EXCLUSION AND EXTRA PROTECTION ZONES*

GRAVITY SANITARY SEWER

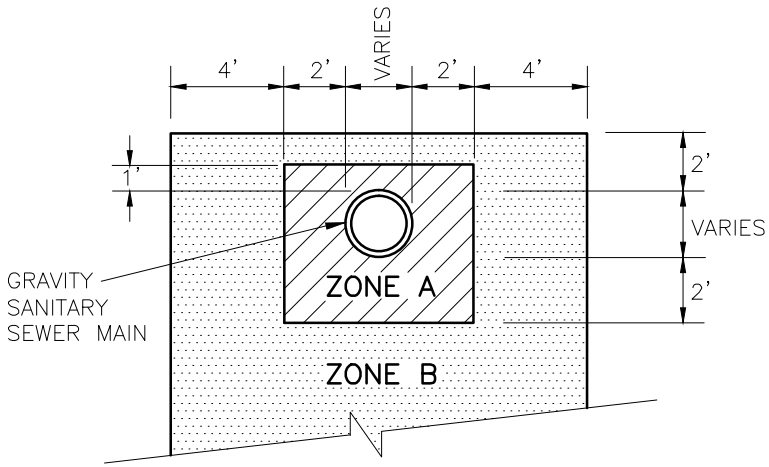

PRESSURIZED SANITARY SEWER

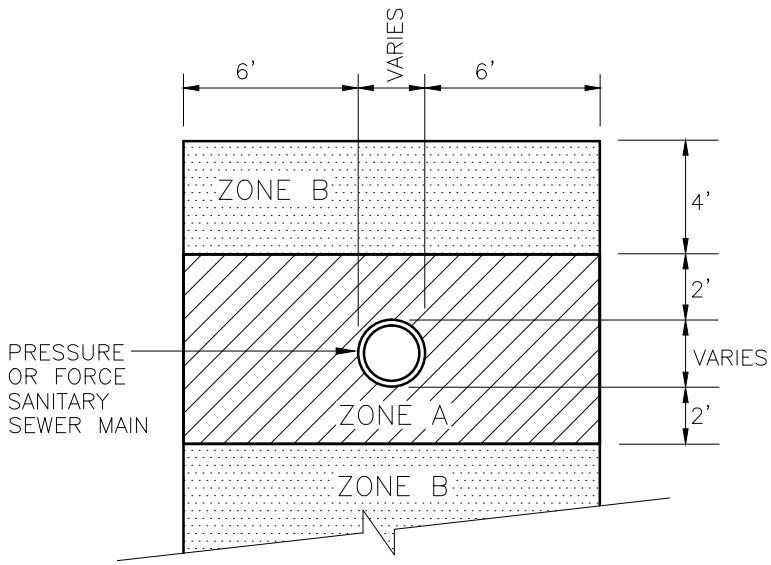

NOTES:

ZONE A: NO WATER LINES ALLOWED/MINIMUM SEPARATION.

ZONE B: EXTRA PROTECTION REQUIRED FOR WATER LINES.

* REFER TO MAG SPECIFICATION SECTION 610, WATER LINE CONSTRUCTION.

COP STANDARD DETAIL	WATER AND SANITARY SEWER SEPARATION/PROTECTION	CITY ENGINEER	REVISED: 05/15	DETAIL No. 404P-1

WATER LINE EXTRA PROTECTION

DUCTILE IRON PIPE WITH RESTRAINED OR MECHANICAL JOINTS*

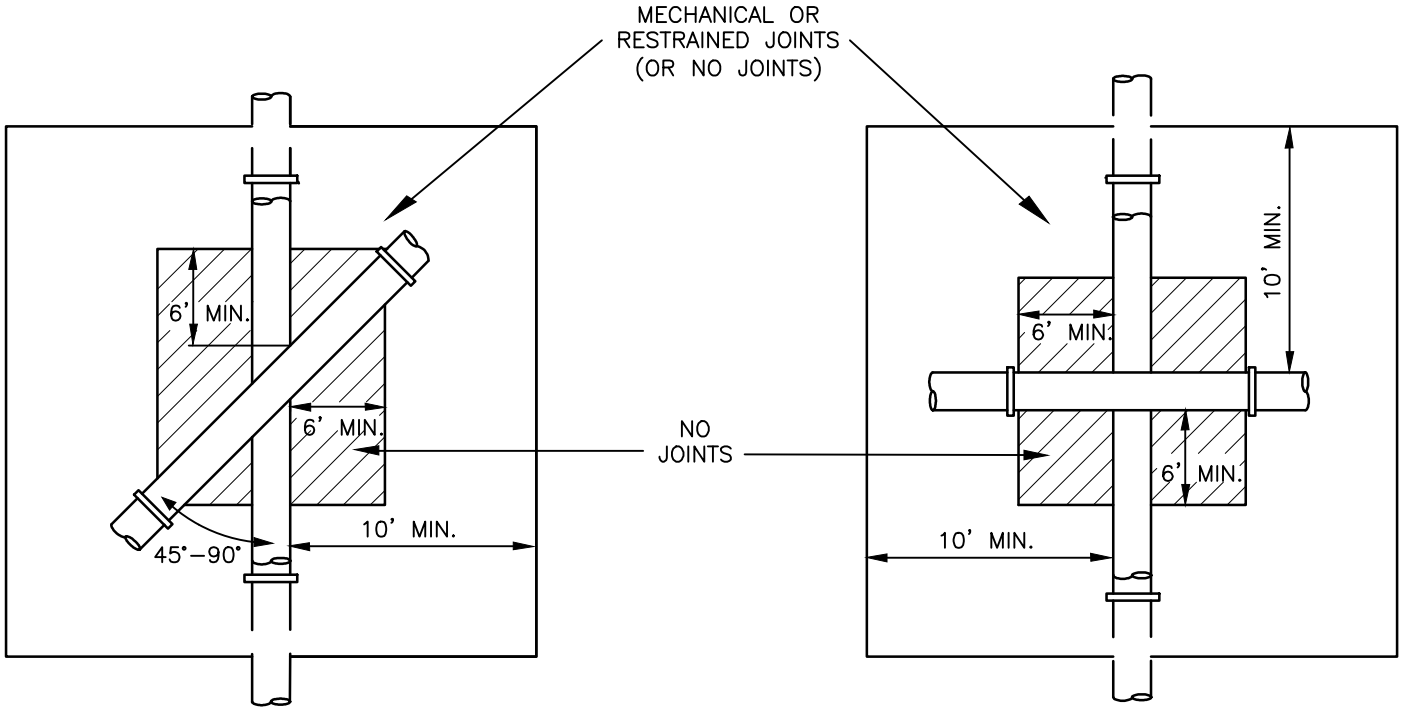

EXTRA PROTECTION DUCTILE IRON PIPE
(GRAVITY OR PRESSURIZED) SEWER LINE

NOTES:

* REFER TO MAG STANDARD SPECIFICATION SECTION 610.

COP STANDARD DETAIL	WATER AND SANITARY SEWER SEPARATION/PROTECTION	CITY ENGINEER	REVISED: 05/15	DETAIL No. 404P-2

ENCASEMENT FOR PIPE CROSSING

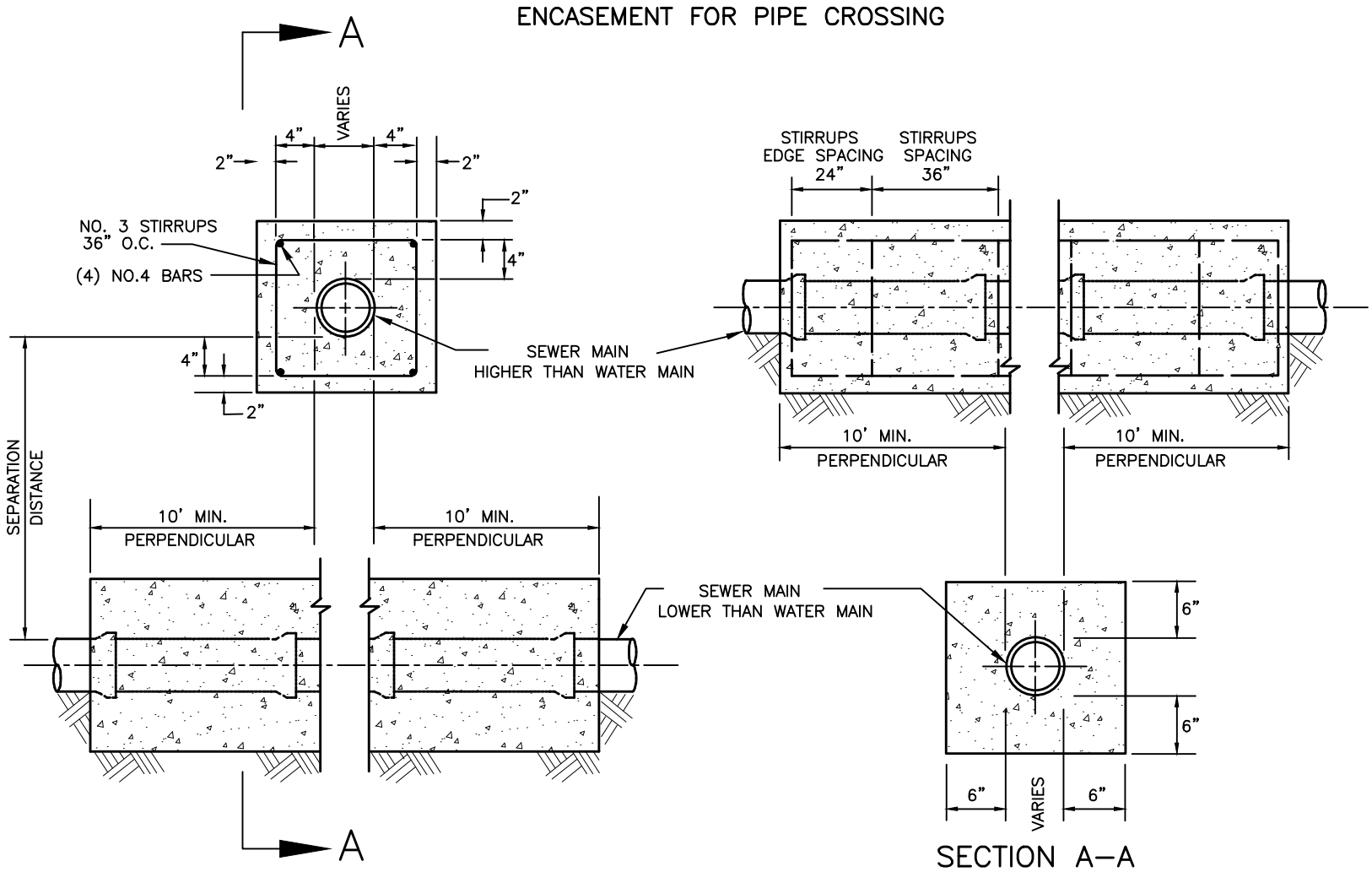

NOTES:

1. CLASS 'A' CONCRETE AS PER MAG SECTION 725.
2. ENCASEMENT DETAIL ONLY APPLIES TO SEWER LINES.

PV STANDARD DETAIL	WATER AND SEWER SEPARATION/PRETECTION	TOWN ENGINEER	REVISED: 3/16	DETAIL No. 404PV

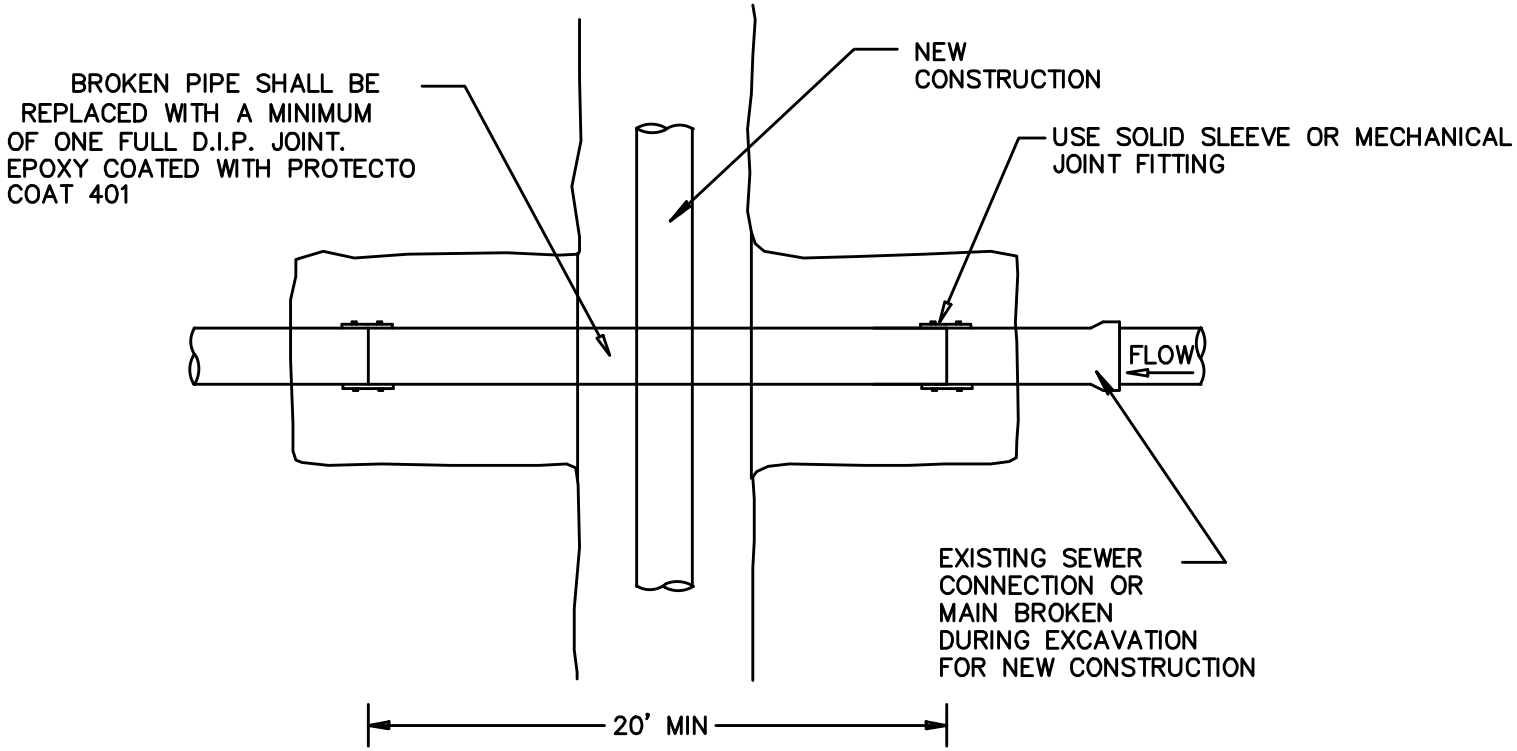

COMPACTION SHALL BE DONE IN ACCORDANCE WITH QUAD CITY STANDARD DETAIL 200Q

MAINTAIN EXISTING FLOW LINE

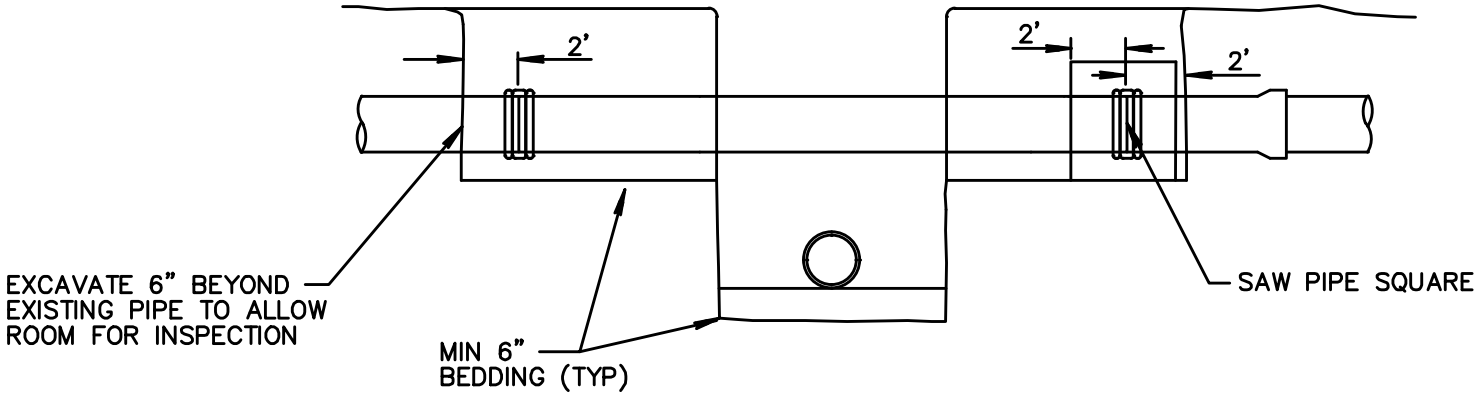

QUAD CITY STANDARD DETAIL	BROKEN SEWER LINE REPLACEMENT	REVISED: 3/16	DETAIL No. 405Q

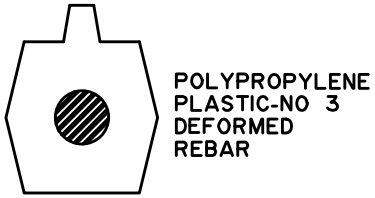

SECTION A–A

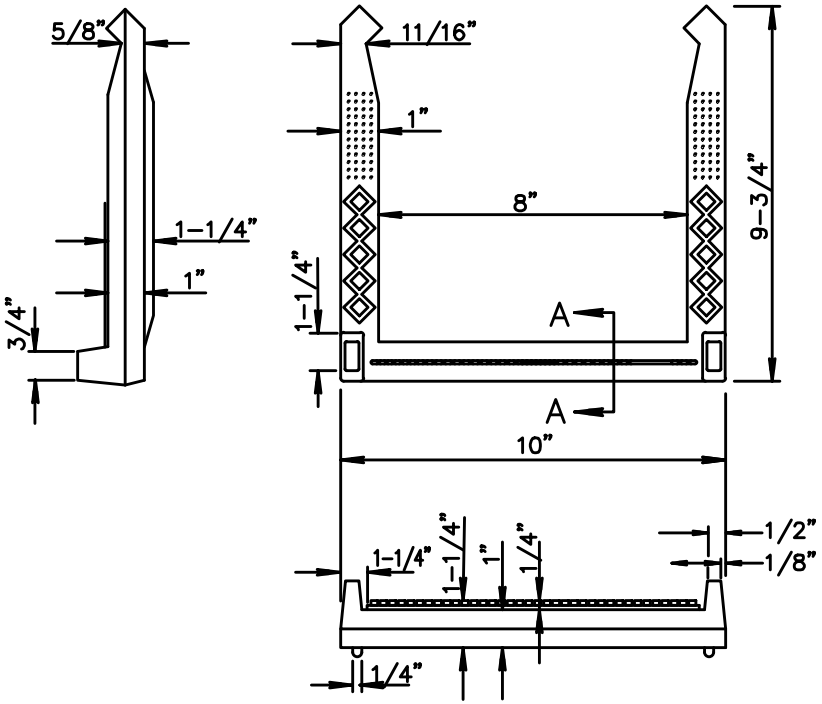

INTEGRALLY CAST

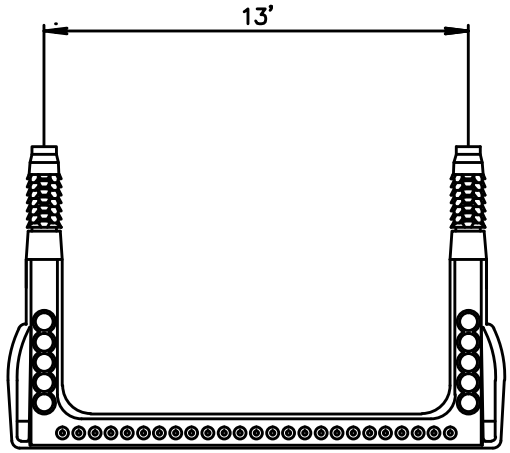

TOP VIEW

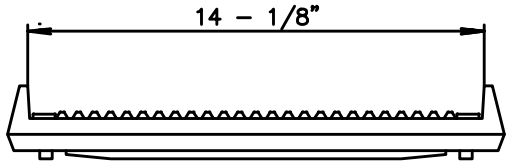

FRONT VIEW

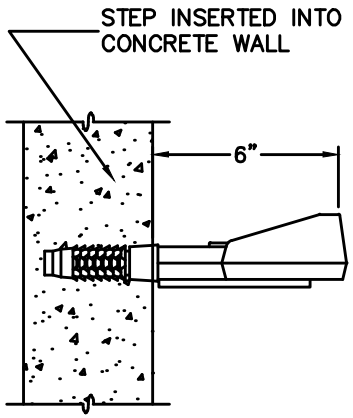

SIDE VIEW

NOTES

1. STEPS SHALL BE PLACED INTO WET CONCRETE WALL DURING MANUFACTURE.
2. POLYPROPYLENE MUST MEET REQUIREMENTS OF A.S.T.M. 2146, TYPE II, GRADE 16906.

NOTES

1. ALL STEPS SHALL MEET THE REQUIREMENTS OUTLINED IN ASTM D–4101, TYPE II.
2. THE STEEL USED IN MANUFACTURING IS A #4 DEFORMED REBAR GRADE 60, ASTM A–615.

QUAD CITY STANDARD DETAIL	MANHOLE / VAULT STEPS	REVISED: 3/16	DETAIL No. 412Q

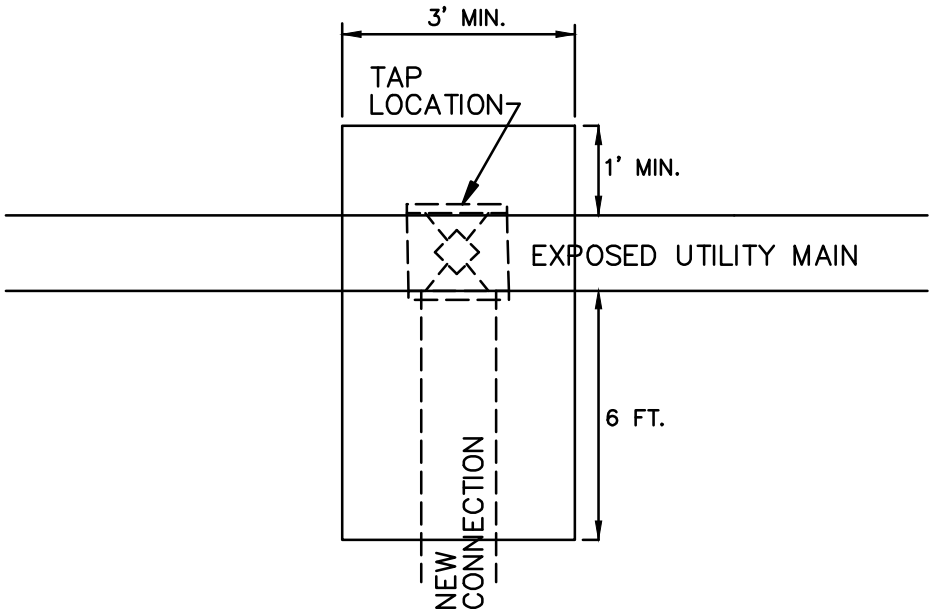

PLAN

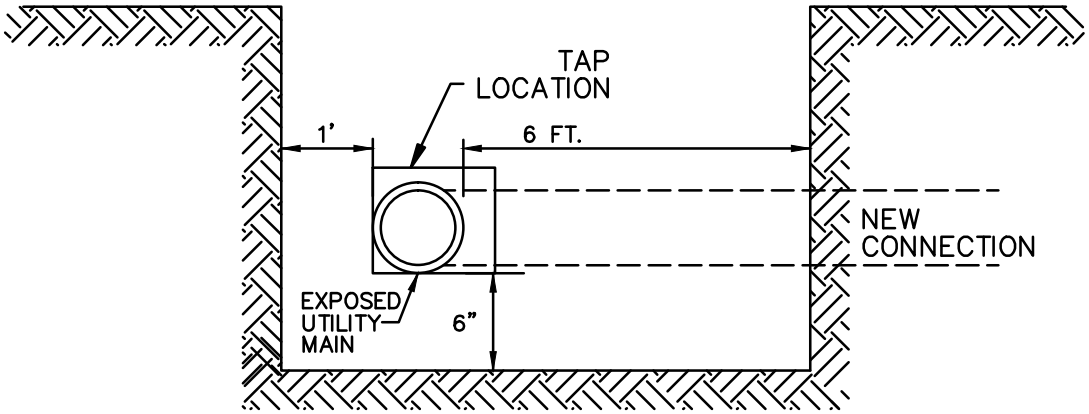

PROFILE

NOTES:
1. CONTRACTOR MUST EXPOSE MAIN TO THESE MINIMUM DIMENSIONS.
2. CONTRACTOR TO PROVIDE SAFE EXCAVATION CONFORMING TO O.S.H.A. REGULATIONS.
3. TAPS PERFORMED BY CITY PERSONNEL ONLY.

COP STANDARD DETAIL	UTILITY MAIN EXPOSURE NEW SERVICE CONNECTION	CITY ENGINEER	REVISED: 05/15	DETAIL No. 414P

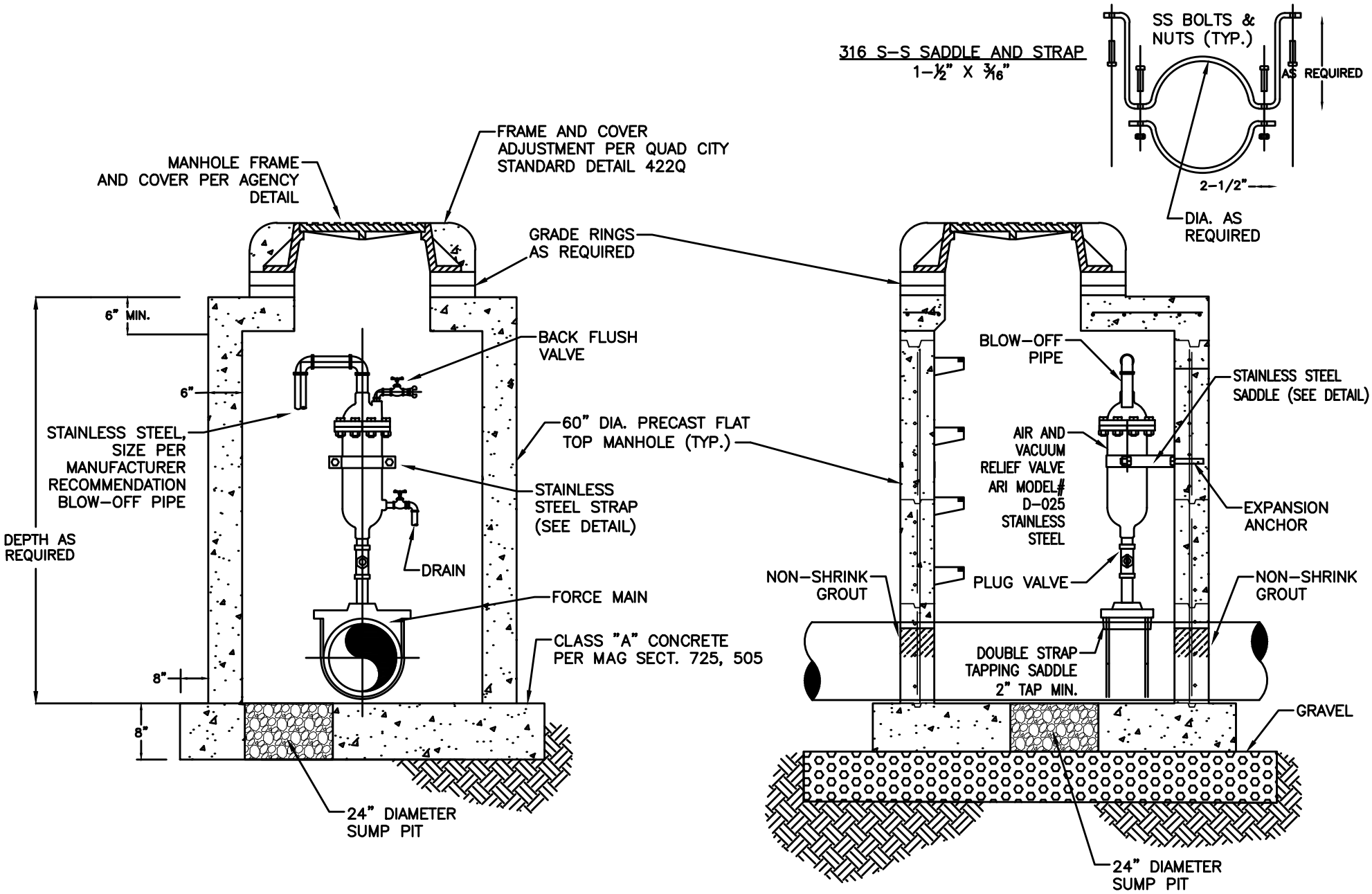

QUAD CITY STANDARD DETAIL	SANITARY FORCE MAIN AIR AND VACUUM RELEASE VALVE	REVISED: 3/16	DETAIL No. 416Q

NOTES:

1. PRE–CAST, REINFORCED MANHOLE SECTIONS SHALL BE MANUFACTURED IN ACCORDANCE WITH A.S.T.M. C–478
2. MANHOLE FRAME AND COVER PER AGENCY REQUIREMENTS AND ADJUSTMENT PER 422Q.
3. MANHOLE STEPS PER QUAD CITY STANDARD DETAIL 412Q. STEPS TO BE LOCATED ON OULET SIDE OF MANHOLE.
4. ALL CONCRETE TO BE CURED AND PROTECTED.
5. GROUT ALL JOINTS TO SMOOTH SURFACE.
6. PRESCOTT MANHOLES: REQUIRING LINING SHALL BE LINED WITH SEWER SHIELD 150, SEWERGARD 210S, OR RAVEN 405.
7. PRESCOTT VALLEY: MANHOLES SHALL BE CONSTRUCTED WITH CONmicSHIELD PER APPLICABLE PVSD AND TOPV DESIGN AND CONSTRUCTION STANDARDS.
8. A MINIMUM OF ONE RISER RING SHALL BE USED.
9. CONTRACTOR SHALL VERIFY INVERT AND RIM ELEVATIONS TO ENSURE 24" MAX. DISTANCE FROM CONE TO RIM WILL BE ATTAINED PRIOR TO SETTING CONE.

MANHOLE INSIDE DIAMETER REQUIREMENTS

PIPE DIAMETER	DEPTH OF MAIN	MANHOLE DIA	RING & COVER
8" – 12"	UP TO 12'	4'	24" DIA
8" – 12"	12' – 20'	5'	30" DIA
15" – 18"	UP TO 20'	5'	30" DIA
*21" AND LARGER	UP TO 20'	6'	30" DIA

*24" AND LARGER REQUIRE COP APPROVAL

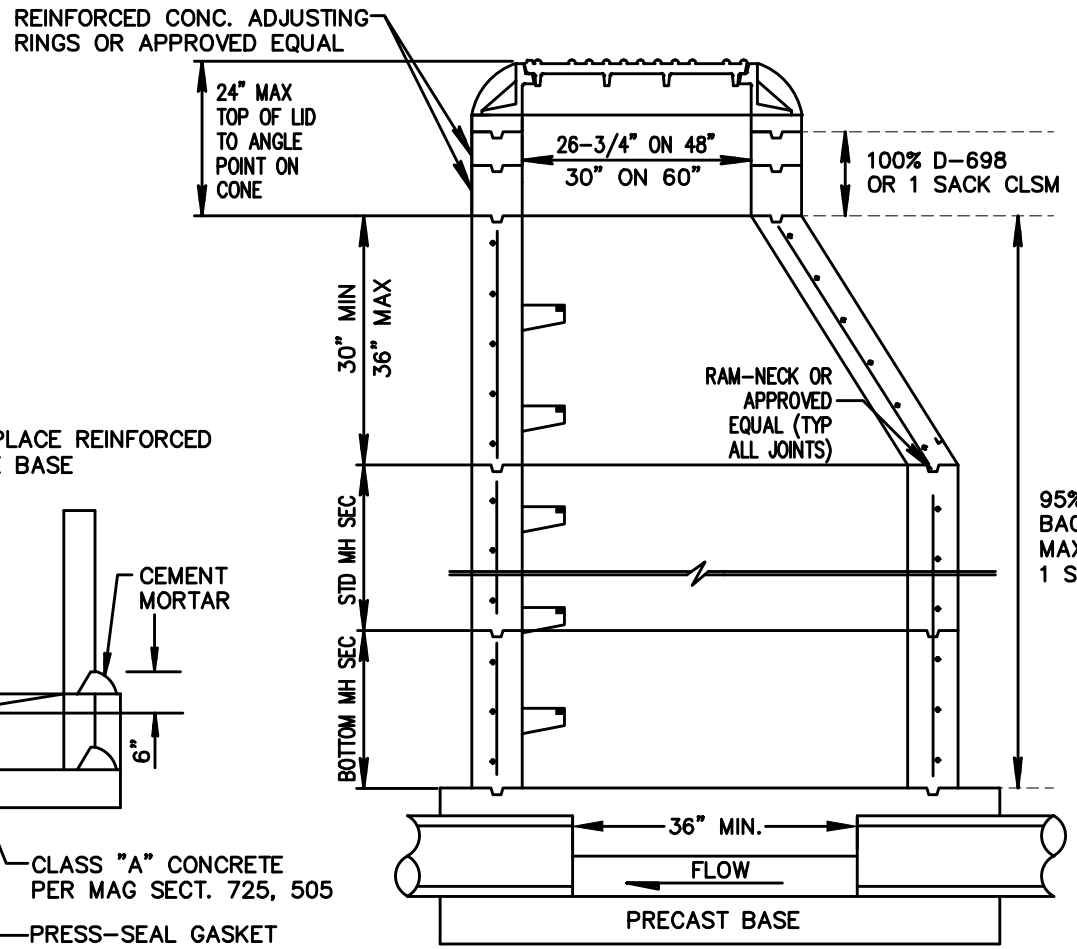

ALTERNATE: CAST IN PLACE REINFORCED CONCRETE BASE

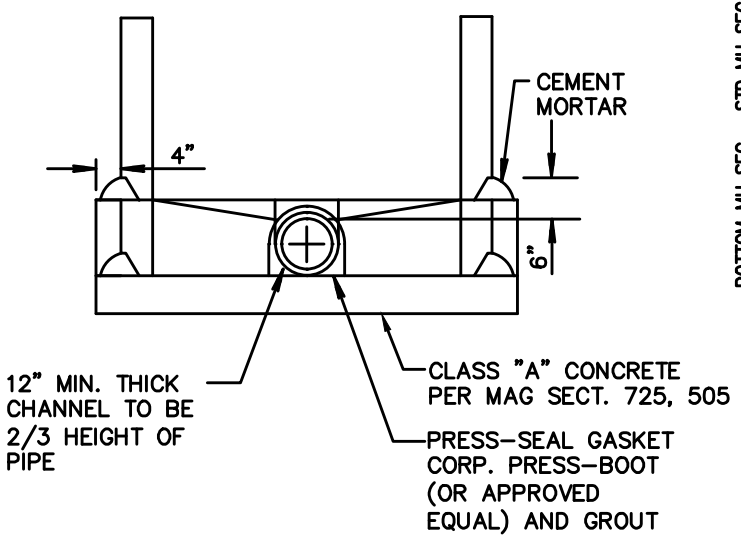

QUAD CITY STANDARD DETAIL	PRECAST CONCRETE SEWER MANHOLE	REVISED: 3/16	DETAIL No. 420Q-1

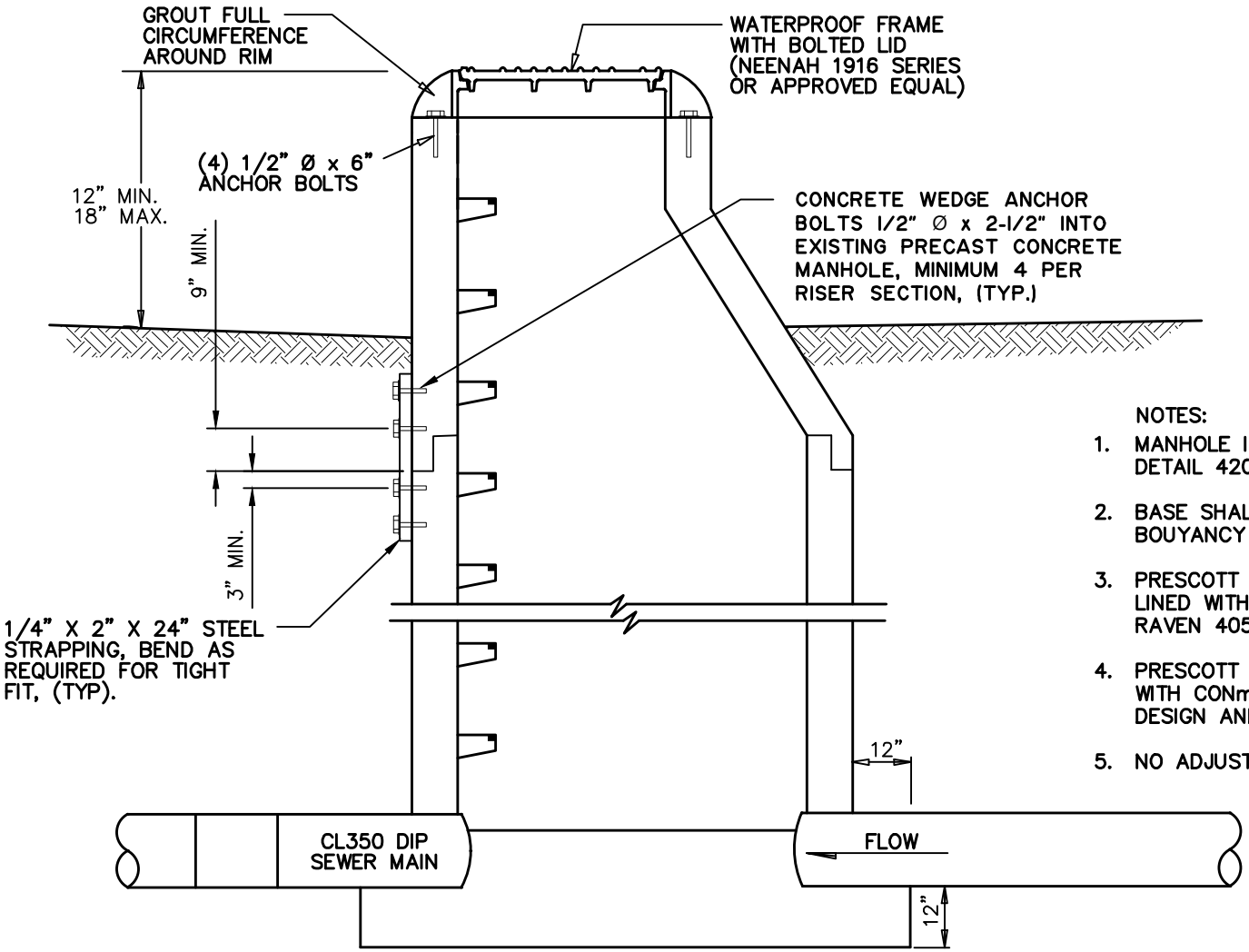

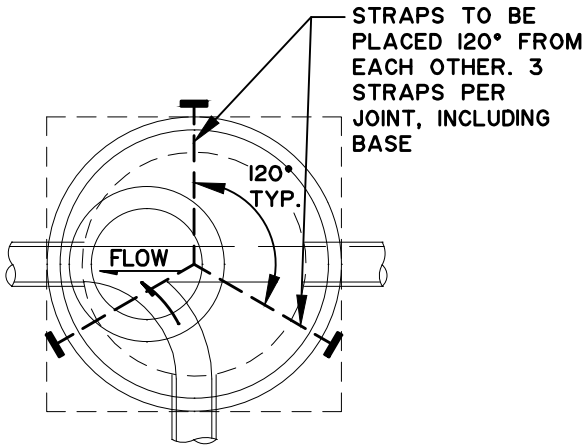

NOTES:

1. MANHOLE IN ACCORDANCE WITH QUAD CITY STANDARD DETAIL 420Q–1.
2. BASE SHALL BE SIZED FOR EXTERNAL FORCE AND BOUYANCY CALCULATIONS.
3. PRESCOTT MANHOLES: REQUIRING LINING SHALL BE LINED WITH SEWER SHIELD 150, SEWERGARD 210S, OR RAVEN 405.
4. PRESCOTT VALLEY: MANHOLES SHALL BE CONSTRUCTED WITH CONmicSHIELD PER APPLICABLE PVSD AND TOPV DESIGN AND CONSTRUCTION STANDARDS.
5. NO ADJUSTING RINGS SHALL BE USED.

QUAD CITY STANDARD DETAIL	MANHOLE IN DRAINAGEWAYS	REVISED: 3/16	DETAIL No. 420Q-2

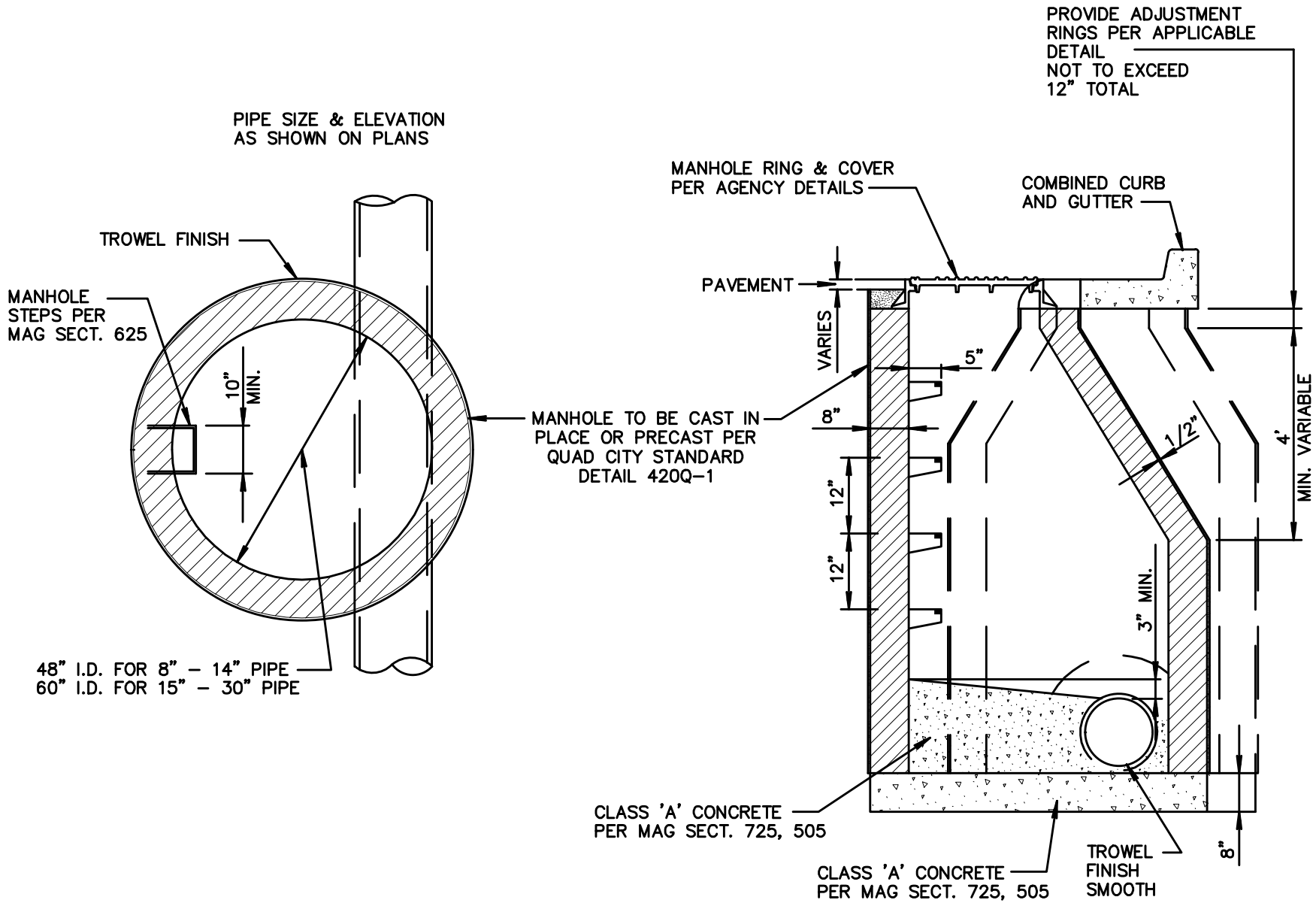

QUAD CITY STANDARD DETAIL	OFFSET MANHOLE 8" TO 30" PIPE	REVISED: 3/16	DETAIL No. 421Q

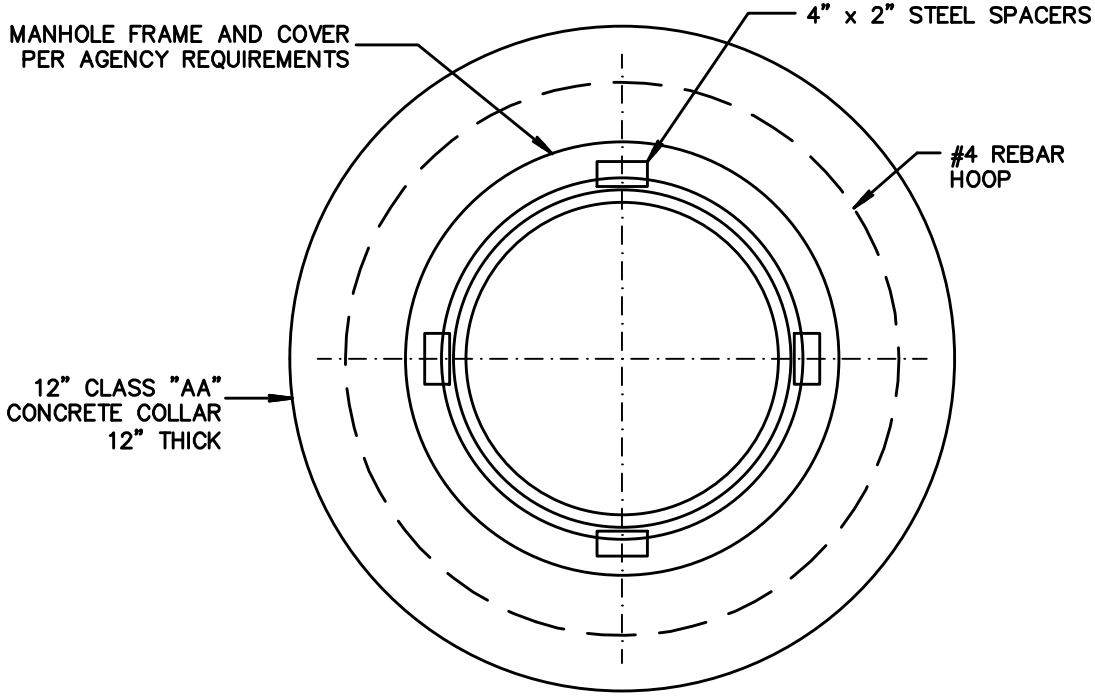

PLAN

NOTES:

1. SPACERS SHALL BE STEEL OR APPROVED EQUAL.
2. A MINIMUM OF FOUR SPACERS SHALL BE USED AND EQUALLY SPACED, MAXIMUM 4" THICKNESS.
3. AN INTERNAL FORM SHALL BE USED TO PREVENT CONCRETE FROM FALLING INTO MANHOLE.
4. A MINIMUM OF ONE RISER RING SHALL BE USED.

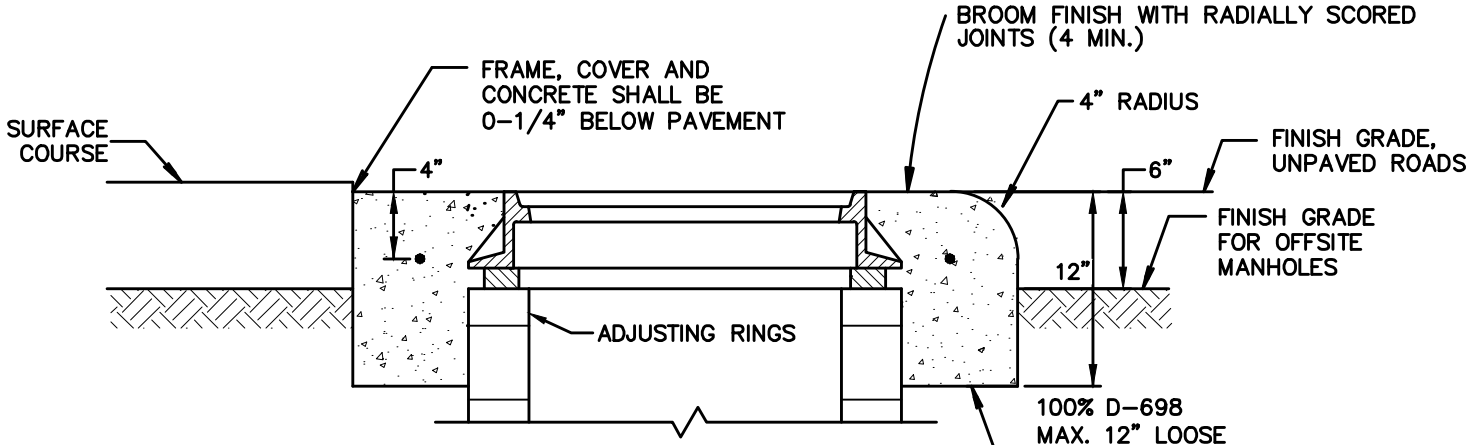

SECTION

QUAD CITY STANDARD DETAIL	MANHOLE FRAME ADJUSTMENT	REVISED: 3/16	DETAIL No. 422Q

FRAME TOP VIEW

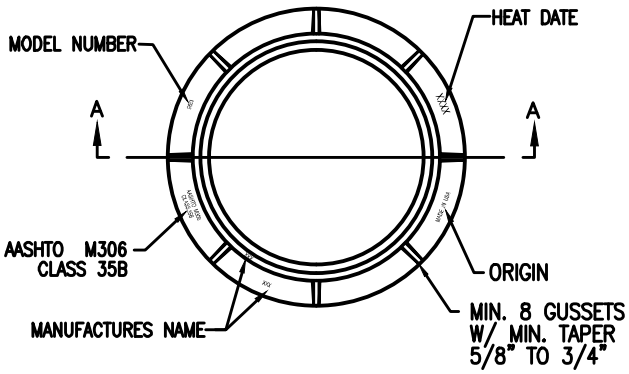

FRAME WT. (CL. 35) – 180 LBS

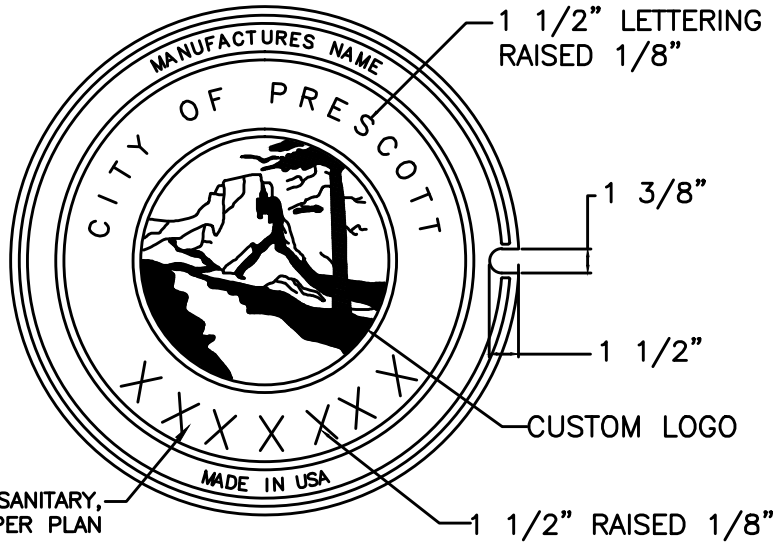

PLAN VIEW

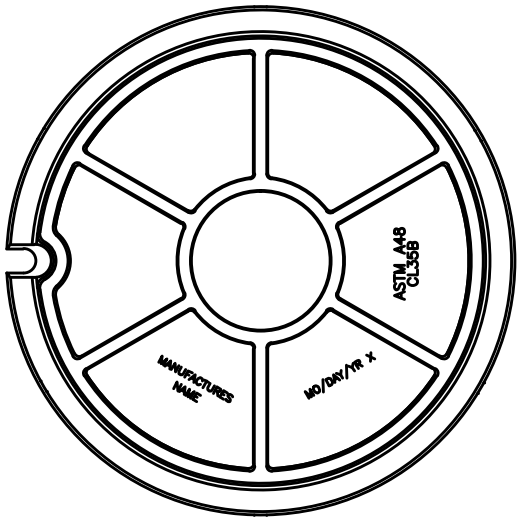

BOTTOM VIEW

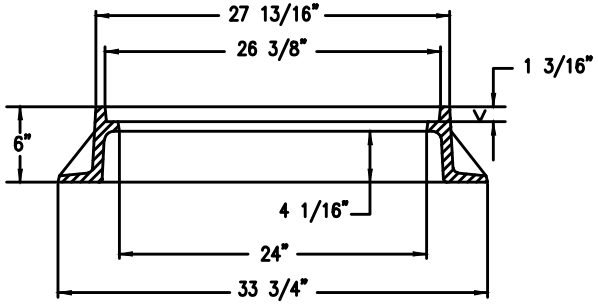

SECTION A

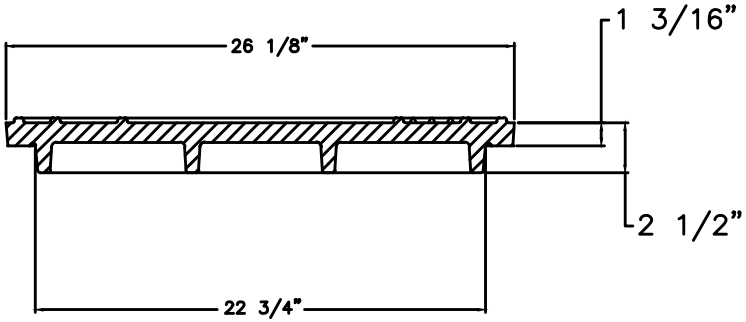

SECTION VIEW

NOTE:

LETTERING ON MANHOLE COVER TO CONTAIN CITY OF PRESCOTT AND UTILITY FOR WHICH MANHOLE IS NEEDED, (I.E. "PRESCOTT SANITARY SEWER"), OR AS DIRECTED. THE TOTAL WIDTH OF INDIVIDUAL LETTERS TO BE SUCH THAT LETTERS AND WORDS ARE EQUALLY SPACED AND BALANCED TO FORM A COMPLETE CIRCLE WITH SPACES BEFORE AND AFTER THE WORD IDENTIFYING THE AGENCY INVOLVED. LETTERS TO BE 1 1/2" IN HEIGHT AND RAISED FLUSH W/ TOP OF COVER. TYPE OF LETTERS TO BE SUBMITTED FOR APPROVAL. WEIGHT OF CASTINGS SHALL BE NO MORE THAN 2% MORE OR LESS THAN THE APPROXIMATE WEIGHT SPECIFIED. CASTINGS SHALL CONFORM TO ASTM A–48, CLASS 35 AND AASHTO M306. THE BEARING SURFACES OF THE FRAMES AND COVERS SHALL BE MACHINED AND THE COVERS SHALL SEAT FIRMLY WITHOUT ROCKING. ALL DIMENSIONS SHALL HAVE A 1/16" TOLERANCE. U.S. MANUFACTURED IRON ONLY.

COP STANDARD DETAIL	24" CAST IRON MANHOLE FRAME AND COVER	CITY ENGINEER	REVISED: 3/16	DETAIL No. 423P-1

FRAME TOP VIEW

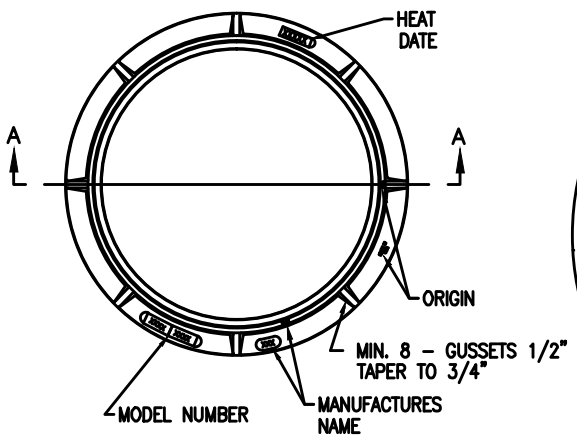

FRAME WT. (CL. 35) – 227 LBS

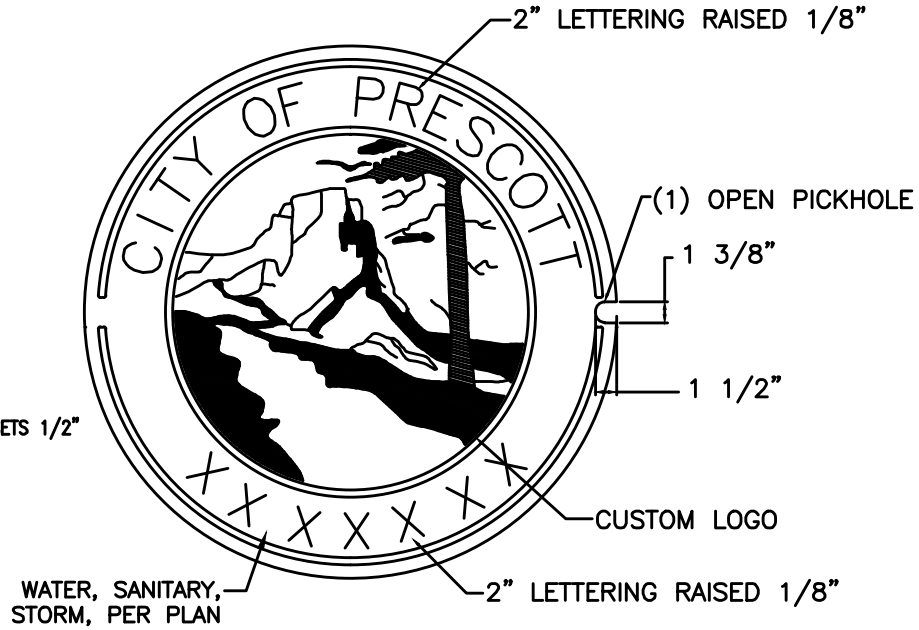

PLAN VIEW

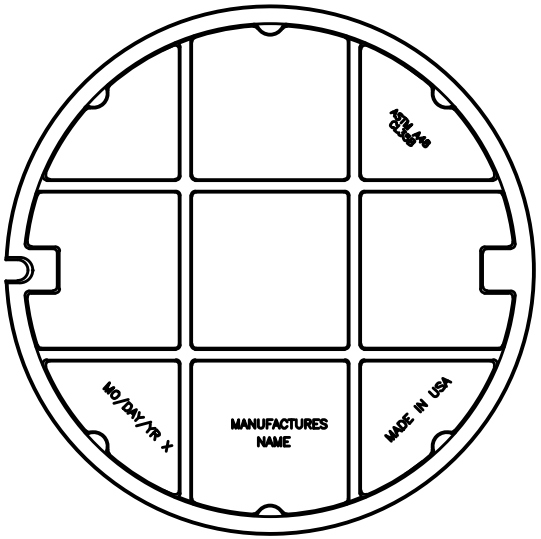

BOTTOM VIEW

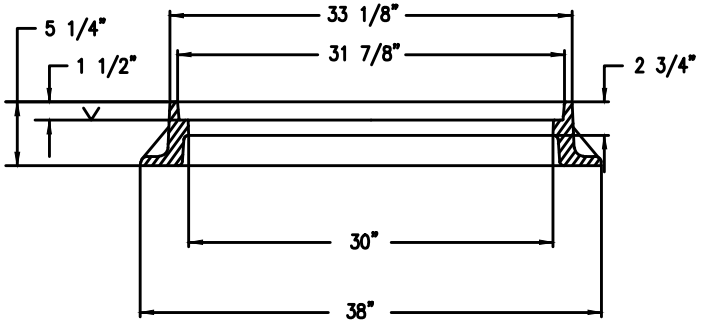

SECTION A

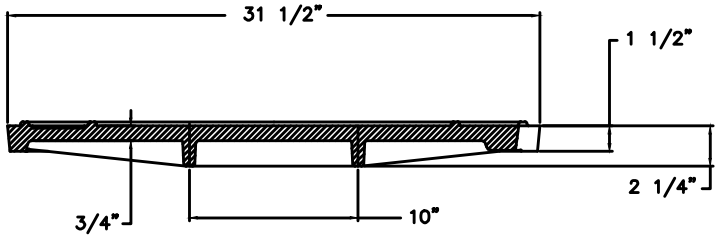

SECTION VIEW

NOTE:

LETTERING ON MANHOLE COVER TO CONTAIN CITY OF PRESCOTT AND UTILITY FOR WHICH MANHOLE IS NEEDED, (I.E. "PRESCOTT SANITARY SEWER"), OR AS DIRECTED. THE TOTAL WIDTH OF INDIVIDUAL LETTERS TO BE SUCH THAT LETTERS AND WORDS ARE EQUALLY SPACED AND BALANCED TO FORM A COMPLETE CIRCLE WITH SPACES BEFORE AND AFTER THE WORD IDENTIFYING THE AGENCY INVOLVED. LETTERS TO BE 2" IN HEIGHT AND RAISED FLUSH W/ TOP OF COVER. TYPE OF LETTERS TO BE SUBMITTED FOR APPROVAL. WEIGHT OF CASTINGS SHALL BE NO MORE THAN 2% MORE OR LESS THAN THE APPROXIMATE WEIGHT SPECIFIED. CASTINGS SHALL CONFORM TO ASTM A–48, CLASS 35 AND AASHTO M306. THE BEARING SURFACES OF THE FRAMES AND COVERS SHALL BE MACHINED AND THE COVERS SHALL SEAT FIRMLY WITHOUT ROCKING. ALL DIMENSIONS SHALL HAVE A 1/16" TOLERANCE. U.S. MANUFACTURED IRON ONLY.

COP STANDARD DETAIL	30" CAST IRON MANHOLE FRAME AND COVER	CITY ENGINEER	REVISED: 3/16	DETAIL No. 423P-2

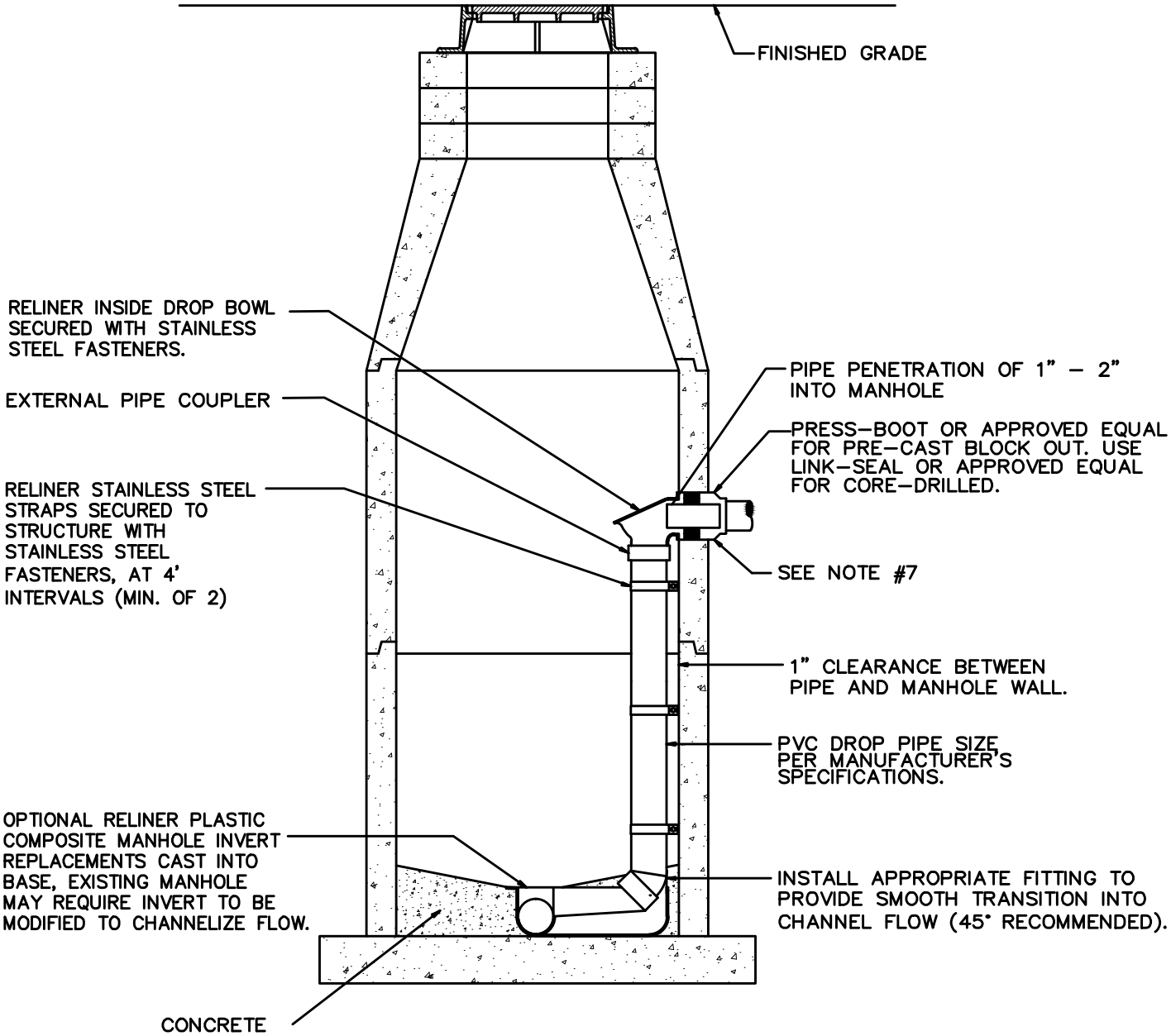

NOTES:

1. MANHOLE IN ACCORDANCE WITH QUAD CITY STANDARD DETAIL 420Q–1.
2. DURAN, INC. RELINER (OR APPROVED EQUAL) SHALL BE INSTALLED PER MANUFACTURERS RECOMMENDATIONS.
3. V–NOTCH SHALL BE CUT IN INFLUENT PIPE INVERT.
4. PRESCOTT: MANHOLES SHALL BE LINED WITH SEWER SHIELD 150, SEWERGARD 210S, OR RAVEN 405.
5. PRESCOTT VALLEY: MANHOLES SHALL BE CONSTRUCTED WITH CONmicSHIELD PER APPLICABLE PVSD AND TOPV DESIGN AND CONSTRUCTION STANDARDS.
6. PRESCOTT VALLEY: MANHOLES SHALL BE COATED WITH INSECTA® CONTACT PESTICIDE OR APPROVED EQUAL.
7. WHEN CONNECTION IS FOR AN EXISTING MAIN, THE PIPE OPENING SHALL BE MADE BY CORE DRILLING MANHOLE IN ACCORDANCE WITH MAG SPECIFICATION SECTION 625.3.
8. FORCE MAIN DISCHARGE SHALL REQUIRE A HOOD ON THE DROP BOWL.

QUAD CITY STANDARD DETAIL	INSIDE DROP MANHOLE	REVISED: 3/16	DETAIL No. 426Q-1

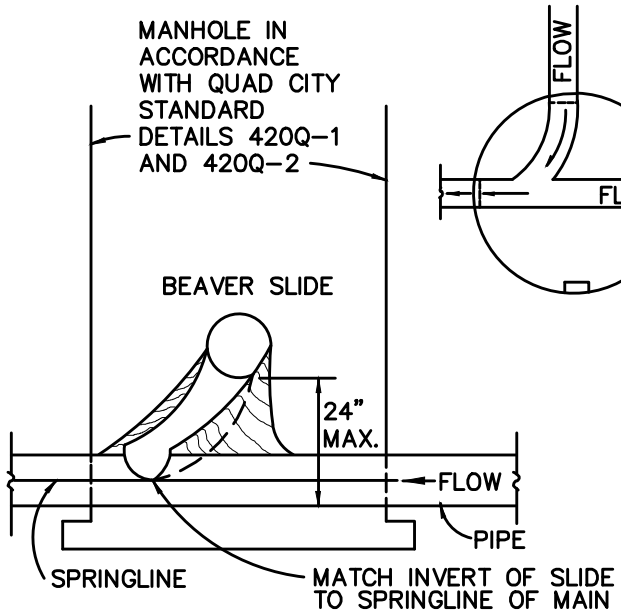

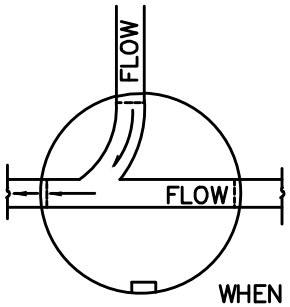

WHEN INSTALLING A BEAVER SLIDE THAT INTERCEPTS AN EXISTING SEWER AT A RIGHT ANGLE, THE CONNECTING INVERT OF THE BEAVER SLIDE IS TO INTERCEPT THE EXISTING SEWER SLIGHTLY ABOVE THE SPRINGLINE AS SHOWN. DISTANCE MEASURED FROM INVERT TO INVERT.

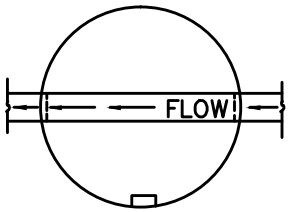

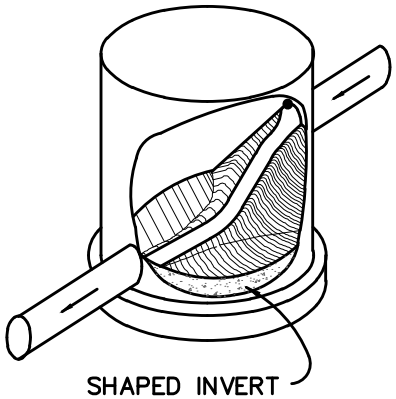

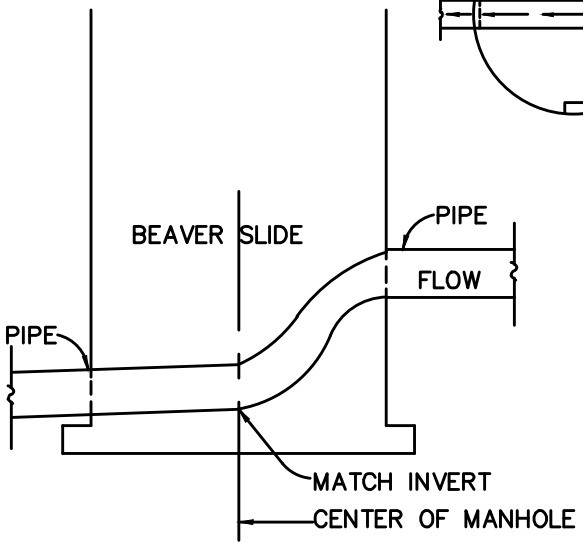

WHEN INSTALLING A BEAVER SLIDE WHERE THE FLOW IS STRAIGHT THROUGH THE MANHOLE, THE BEAVER SLIDE IS TO MATCH THE INVERT OF THE EXISTING LINE AND NOT TO EXTEND MORE THAN HALF–WAY THROUGH THE MANHOLE. DISTANCE MEASURED FROM INVERT TO INVERT. PREMIX MORTAR PROHIBITED

*MAX BEAVER SLIDE ELEVATION CHANGE 2' UNLESS APPROVED BY THE CITY/TOWN ENGINEER.

QUAD CITY STANDARD DETAIL	BEAVER SLIDE MANHOLE	REVISED: 3/16	DETAIL No. 426Q-2

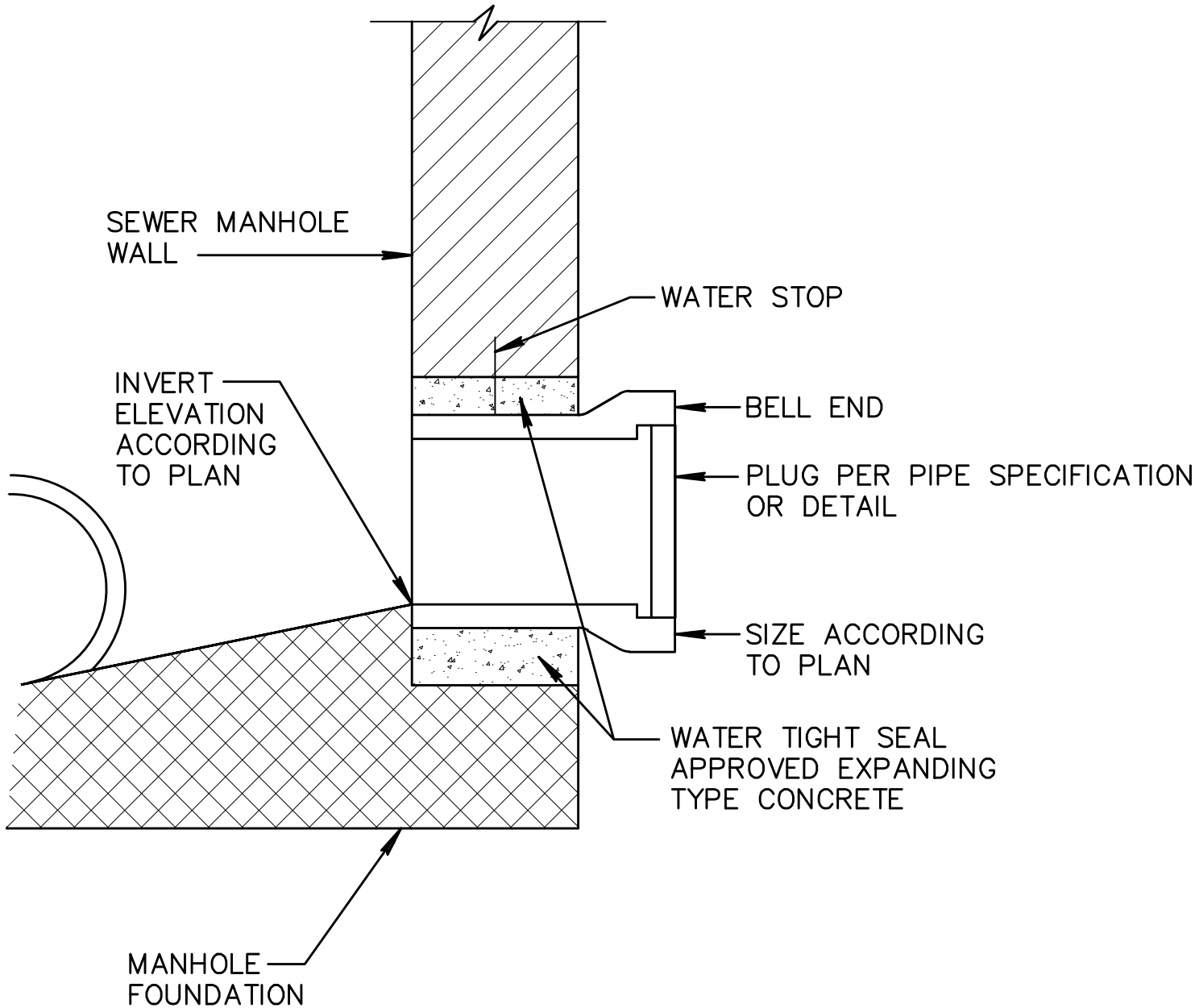

QUAD CITY STANDARD DETAIL	SEWER STUB-OUT AND PLUGS	REVISED: 3/16	DETAIL No. 427Q

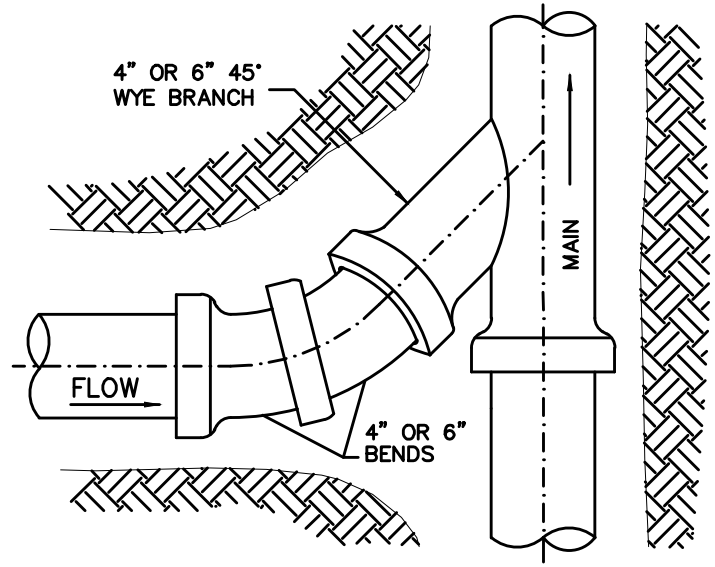

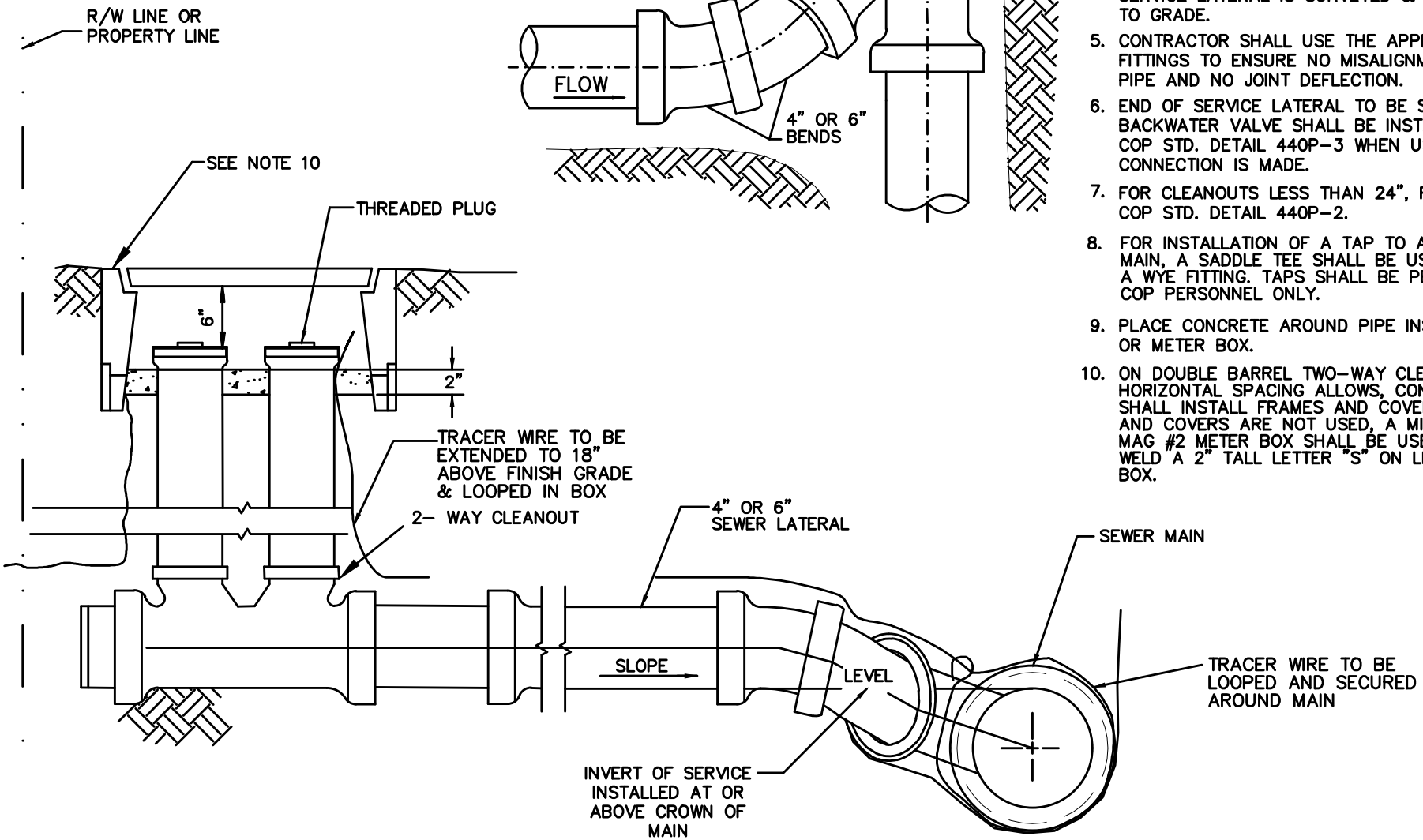

NOTES:

1. SERVICE LATERAL EXTENDS TO PROPERTY LINE OR TO EASEMENT LINE.
2. SIZE OF TAP AND SERVICE LATERAL SHALL BE DESIGNATED ON PLANS.
3. CONSTRUCT SERVICE LATERAL AT MINIMUM SLOPE OF ¼" PER FOOT.
4. IF DEPTH REQUIRES, MINIMUM SLOPE CAN BE REDUCED TO 1/8" PER FOOT PROVIDED SERVICE LATERAL IS SURVEYED & STAKED TO GRADE.
5. CONTRACTOR SHALL USE THE APPROPRIATE FITTINGS TO ENSURE NO MISALIGNMENT OF PIPE AND NO JOINT DEFLECTION.
6. END OF SERVICE LATERAL TO BE SEALED. BACKWATER VALVE SHALL BE INSTALLED PER COP STD. DETAIL 440P-3 WHEN USER CONNECTION IS MADE.
7. FOR CLEANOUTS LESS THAN 24", REFER TO COP STD. DETAIL 440P-2.
8. FOR INSTALLATION OF A TAP TO AN EXISTING MAIN, A SADDLE TEE SHALL BE USED IN LIEU OF A WYE FITTING. TAPS SHALL BE PERFORMED BY COP PERSONNEL ONLY.
9. PLACE CONCRETE AROUND PIPE INSIDE FRAME OR METER BOX.
10. ON DOUBLE BARREL TWO-WAY CLEANOUT, IF HORIZONTAL SPACING ALLOWS, CONTRACTOR SHALL INSTALL FRAMES AND COVERS, IF FRAMES AND COVERS ARE NOT USED, A MINIMUM OF A MAG #2 METER BOX SHALL BE USED. STAMP OR WELD A 2" TALL LETTER "S" ON LID OF METER BOX.

COP STANDARD DETAIL	SEWER SERVICE LATERAL GREATER THAN 2 FEET DEEP	CITY ENGINEER	REVISED: 3/16	DETAIL No. 440P-1

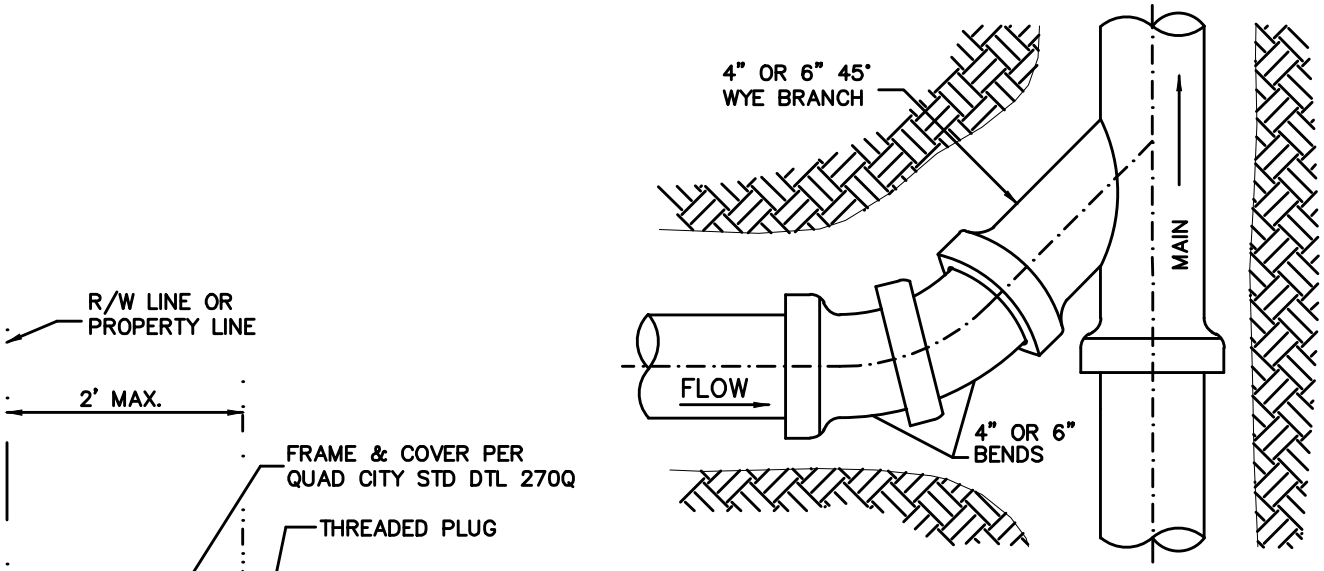

NOTES:

1. SERVICE LATERAL EXTENDS TO PROPERTY LINE OR TO EASEMENT LINE.
2. SIZE OF TAP AND SERVICE LATERAL SHALL BE DESIGNATED ON PLANS.
3. CONSTRUCT SERVICE LATERAL AT MINIMUM SLOPE OF ¼" PER FOOT.
4. IF DEPTH REQUIRES, MINIMUM SLOPE CAN BE REDUCED TO 1/8" PER FOOT PROVIDED SERVICE LATERAL IS SURVEYED & STAKED TO GRADE.
5. CONTRACTOR SHALL USE THE APPROPRIATE FITTINGS TO ENSURE NO MISALIGNMENT OF PIPE AND NO JOINT DEFLECTION.
6. END OF SERVICE LATERAL TO BE SEALED. BACKWATER VALVE SHALL BE INSTALLED PER COP STD. DETAIL 440P-3 WHEN USER CONNECTION IS MADE.
7. FOR CLEANOUTS DEEPER THAN 24", REFER TO COP STD. DETAIL 440P-1.
8. FOR INSTALLATION OF A TAP TO AN EXISTING MAIN, A SADDLE TEE SHALL BE USED IN LIEU OF A WYE FITTING. TAP SHALL BE PERFORMED BY COP PERSONNEL ONLY.
9. PLACE CONCRETE AROUND PIPE INSIDE FRAME AND COVER.

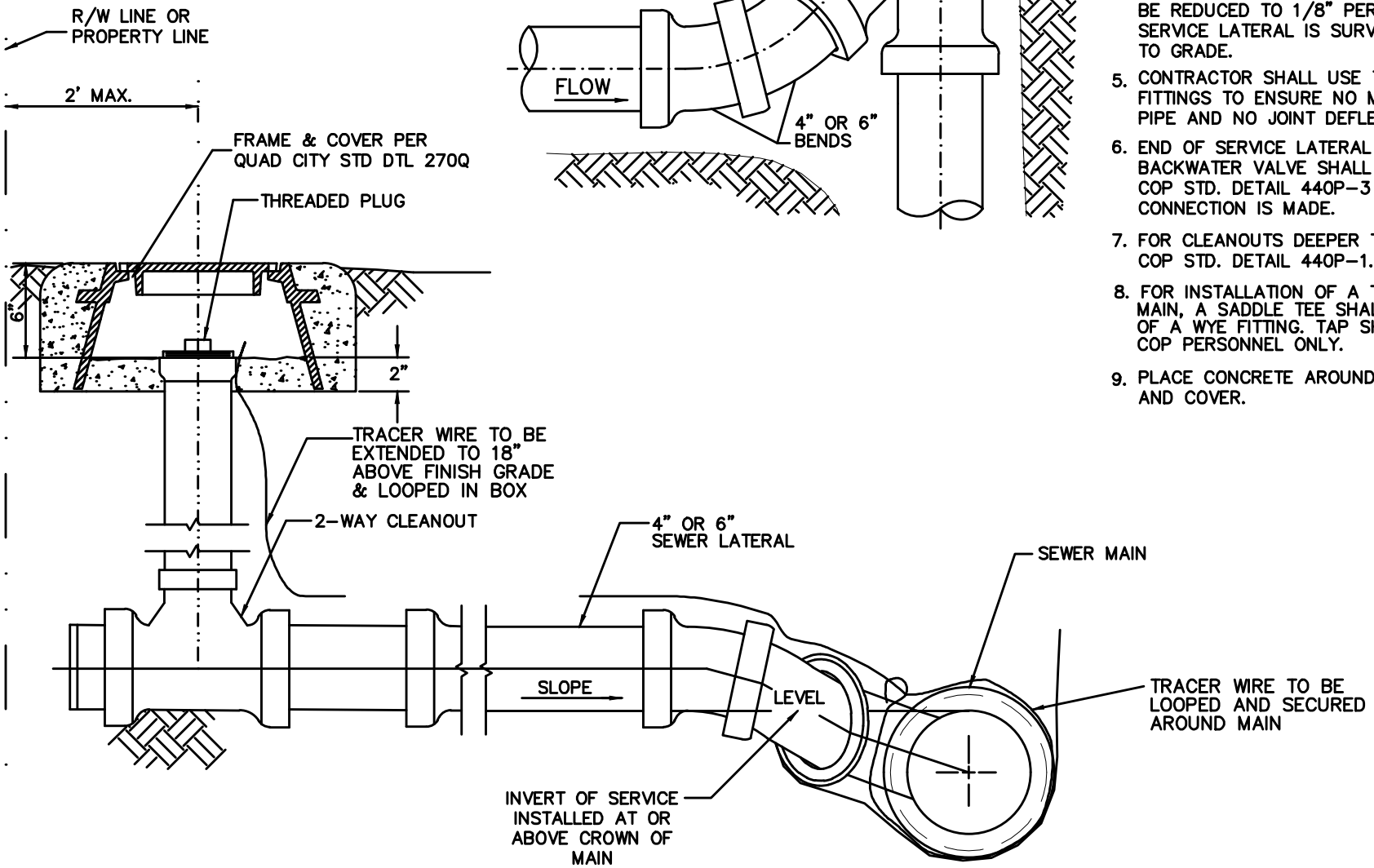

COP STANDARD DETAIL	SEWER SERVICE LATERAL 2 FEET DEEP OR LESS	CITY ENGINEER	REVISED: 3/16	DETAIL No. 440P-2

GREATER THAN 24" DEEP

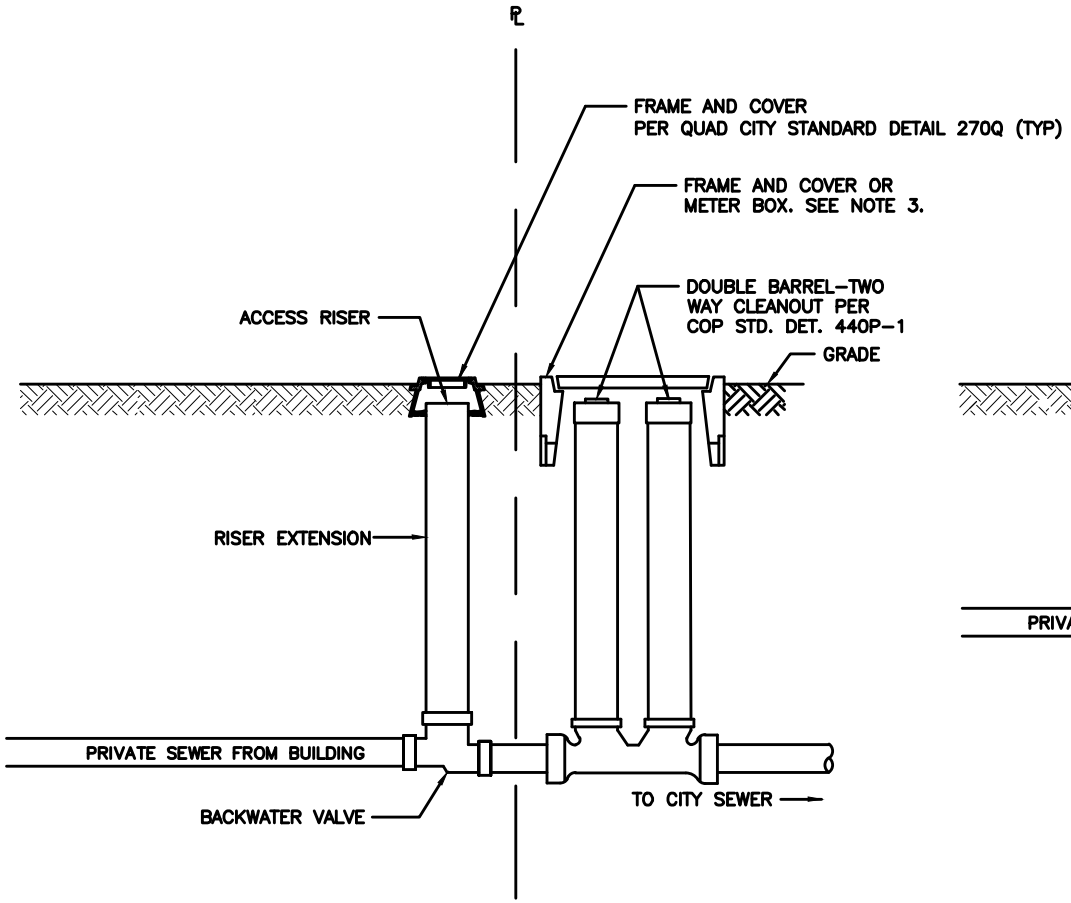

24" DEEP AND SHALLOWER

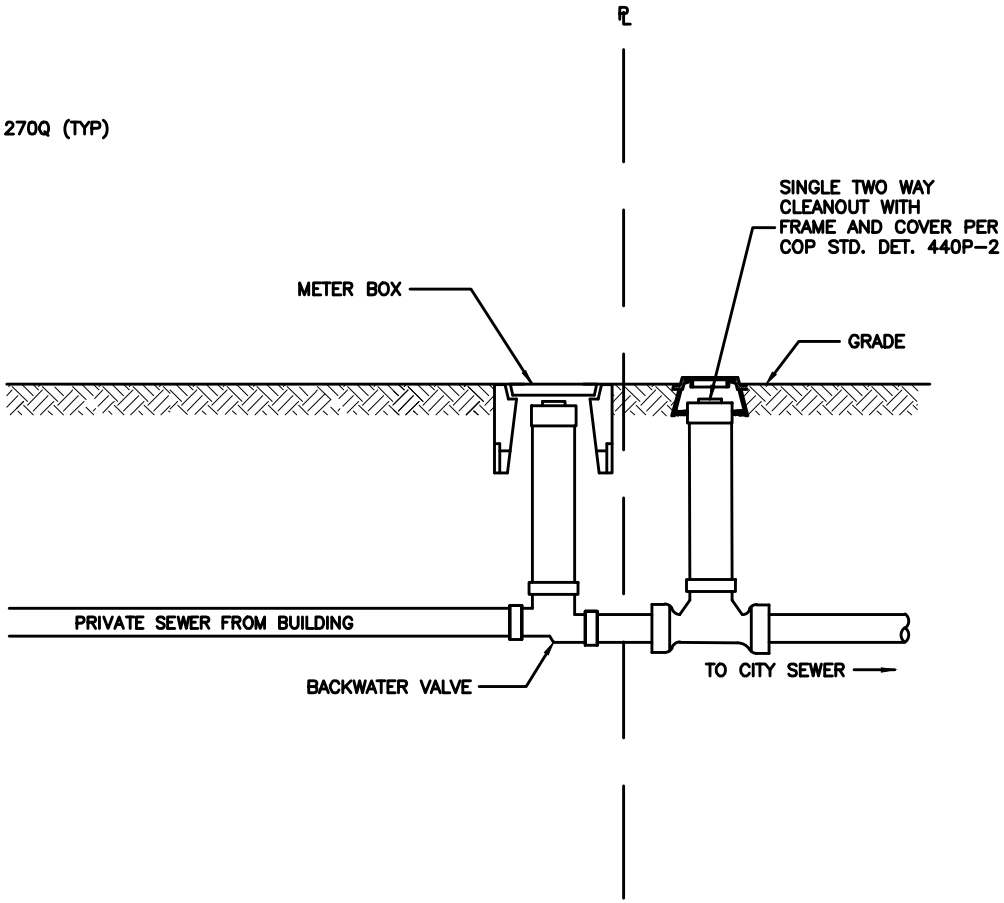

NOTES:

1) BACKWATER VALVE SHALL BE LOCATED BETWEEN THE BUILDING CLEAN–OUT AND PROPERTY LINE.

2) AN EXTENDABLE TYPE BACKWATER VALVE SHALL BE INSTALLED WHEN VALVES ARE DEEPER THAN 24".

3) ON DOUBLE BARREL TWO–WAY CLEANOUT, IF HORIZONTAL SPACING ALLOWS, CONTRACTOR SHALL INSTALL FRAMES AND COVERS, IF FRAMES AND COVERS ARE NOT USED, A MINIMUM OF A MAG #2 METER BOX SHALL BE USED. STAMP OR WELD A 2" TALL LETTER "S" ON LID OF METER BOX.

COP STANDARD DETAIL	BACKWATER VALVE	CITY ENGINEER	REVISED: 3/16	DETAIL No. 440P-3

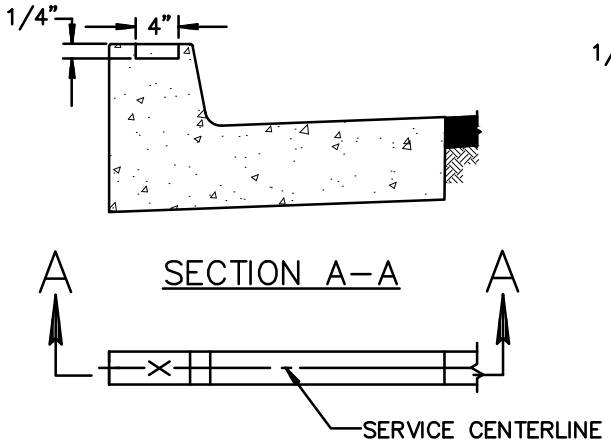

CURB STAMP TYPE A
CURB AND GUTTER

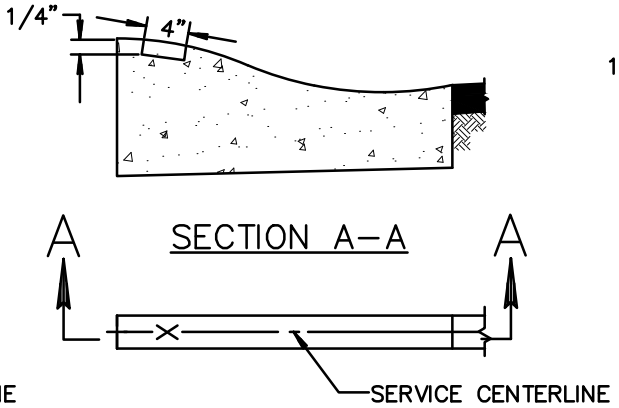

CURB STAMP TYPE C OR D
CURB AND GUTTER

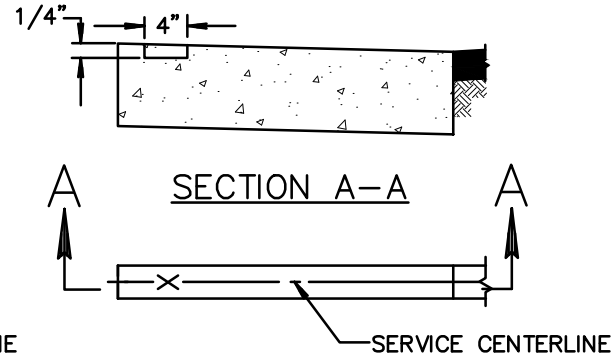

CURB STAMP TYPE B
CURB AND GUTTER

NOTES:

1. STAMP TOP OF CURB WITH 4" TALL BY 1/4" DEEP "W" OR "S" TO DESIGNATE SERVICE LINE CROSSING.

QUAD CITY STANDARD DETAIL	WATER AND SEWER SERVICE CURB CROSSING STAMP	REVISED: 3/16	DETAIL No. 440Q-4

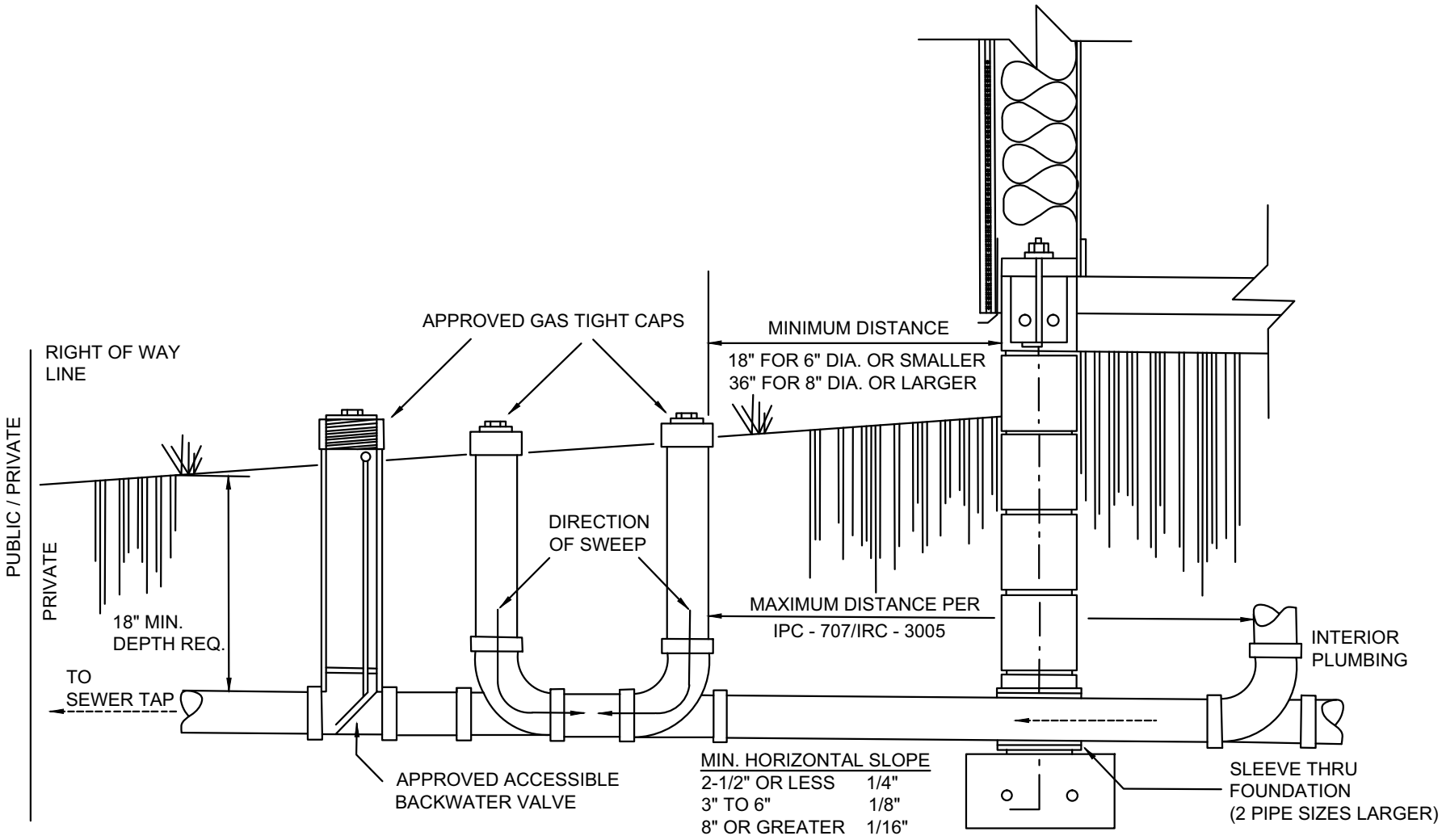

SEWER 2-WAY CLEANOUT & BACKFLOW PREVENTION

PV STANDARD DETAIL	SEWER CLEANOUT - DOUBLE	TOWN ENGINEER	REVISED: 4/16	DETAIL No. 440PV

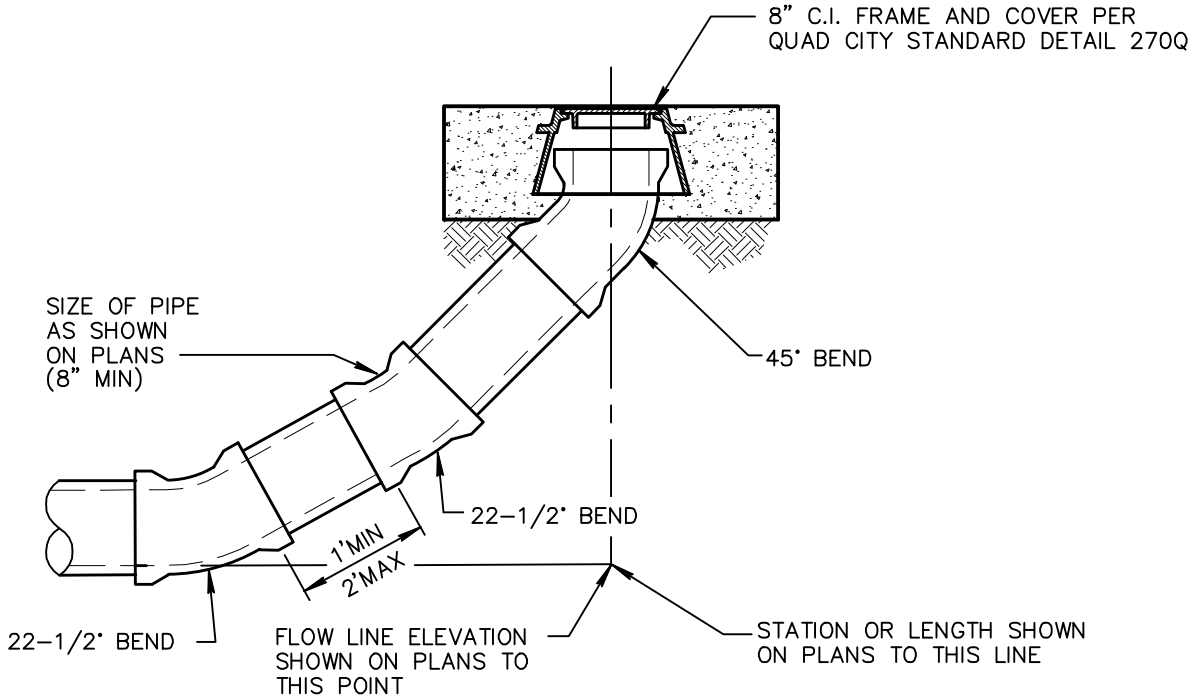

NOTES:

1. NO SERVICE TAPS SHALL BE LOCATED CLOSER THAN 4 FEET DOWNSTREAM OF FIRST BEND.
2. ALL JOINTS ARE TO BE WATER TIGHT.
3. CLEAN OUTS SHALL NOT BE PLACED IN VALLEY GUTTERS, SPANDRELS, CURB & GUTTERS, CATCH BASINS, OR OTHER DRAINAGE STRUCTURES.
4. CLEAN OUTS INSTALLED OFF SITE REQUIRE CARSONITE MARKERS RUNNING PARALLEL TO THE LINE, AS DIRECTED BY AGENCY ENGINEER.
5. BEDDING AND SHADING PER QUAD CITY STANDARD DETAIL 200Q.
6. PLACE CONCRETE AROUND 45° BEND INSIDE FRAME AND COVER.

QUAD CITY STANDARD DETAIL	SEWER MAIN CLEANOUT	REVISED: 3/16	DETAIL No. 441Q

Sewer Manhole Vacuum Testing

1. Vacuum testing is required for all new or replacement sewer manholes in accordance with the American Society for Testing and Materials ASTM C-1244, Arizona Administrative Code (AAC), and instruction per this document.
2. **Exfiltration testing (watertightness) or holiday testing is not permitted.**
3. Testing must be conducted after manhole has been adjusted to final grade, at top of cone, and prior to backfill.
4. Manholes must pass vacuum test prior to any backfill taking place.
5. The developer / contractor shall ensure that testing personnel are qualified and/or directly supervised by persons competent to perform the vacuum tests.
6. Test results shall be certified by a Civil Engineer, registered in the State of Arizona. The certification report shall be provided to the Town Inspector prior to punch list inspection performed by the Town.
7. The Town Inspector shall be notified when testing will be performed and by whom at least 48 hours in advance of test. The Inspector, at his/her option, may witness testing to verify procedures are being followed correctly.
8. The vacuum gage must have a calibration sticker with date of certification. Vacuum test must be performed within one year of calibration certification date. Calibration certification of the gage must be performed a lab / firm accredited by the American Association for Laboratory Accreditation (A2LA) or Town approved equal.
9. The Manhole Vacuum Testing Certification Field Report per this document is the only format acceptable by the Town for manhole vacuum testing.
10. Air vacuum tests must be in accordance with the following procedures and Table 1. The manhole shall be placed under a vacuum of **ten (10) inches of mercury (Hg)**, the vacuum line closed, and the pump shut off. The vacuum level shall not be allowed to drop by more than one (1) inch of mercury in less than the noted times.

Table 1 - Test Criteria

Diameter	Depth	Time
48 Inches	0 feet to 10 feet	60 Seconds
48 Inches	Greater than 10 feet to 15 feet	70 Seconds
48 Inches	Greater than 15 Feet	75 Seconds

Diameter	Depth	Time
60 Inches	0 feet to 10 feet	75 Seconds
60 Inches	Greater than 10 feet to 15 feet	90 Seconds
60 Inches	Greater than 15 Feet	105 Seconds

Sewer Manhole Vacuum Testing Certification Report

Date _____
Project Name _____
Phase if Available _____
CIP Number if Available _____
Permit Number _____
Address / Location _____
Developer / Contactor Name _____
Gage Calibration Date _____

The following vacuum tests were performed under my supervision or as noted, and "To the best of my knowledge and belief", are found to be in conformance with Town Manhole Testing Requirements."

Stamp/Seal

Civil Engineer Registered in the State of Arizona
Name _____
Signature _____
Date _____

If witnessed by Town Inspector
Name _____
Signature _____
Date _____

Manhole #	Diameter (Inches)	Depth (Feet)	State Material Concrete Precast Concrete Poured Other	Pass (Check)	Fail (Check)

TOWN OF PRESCOTT VALLEY DESIGN AND CONSTRUCTION STANDARDS

SANITARY SEWER AND STORM DRAIN CLEANING

Statement of Purpose

All new, repaired and/or modified sanitary sewer and storm drainage infrastructure is subject to cleaning and follow-up TV inspection prior to approval of as-built drawings and final acceptance by the Town of Prescott Valley (Town). This specification outlines Town requirements for cleaning protocol.

PART 1 - GENERAL

1.01 BACKGROUND SUMMARY

A. Section includes sanitary sewer and storm drainage (SSSD) line cleaning, manhole cleaning, and internal obstruction removal.

1.02 SYSTEM DESCRIPTION

A. Cleaning shall remove sediment, rocks, debris, roots, grease accumulations and obstructions from length of sewer and manholes to be lined.

B. Cleaning of sewer and manhole walls in vicinity of lining shall remove grease, scale, encrustation and loose mortar so that no foreign intrusion shall cause imperfections in lining (e.g. bumps, folds, dimples).

C. Sewer cleaning methods shall be washing with high pressure water or other as approved by the Town of Prescott Valley (Town).

1.03 SUBMITTALS

Submit letter that identifies methods that will be used to remove sediment, debris, grease, scale, encrustations, loose concrete, and roots throughout section of sewer to be cleaned. The letter shall include the following:

A. Detailed description of cleaning process.

B. Schedule of activities.

C. List of the actions to mitigate impact to Town during cleaning operation.

PART 2 - PRODUCTS

2.01 MATERIALS

Do not use chemicals without written approval of the Town.

Continued Next Page

2.02 EQUIPMENT

High-Velocity Hydraulic (Hydro-Cleaning) Equipment: Equipment shall be capable of removing dirt, grease rocks, sand, roots, and other materials and obstructions from sewer lines and manholes.

A. Nozzles shall be capable of producing scouring action from 15 to 45 degrees in all size lines designated to be cleaned.
B. Equipment shall carry its own water tank, auxiliary engines, and high pressure water pump.
C. Combination Unit Pump: Capable of pumping at a minimum of 50 gallons per minute (gpm) up to 80 gpm at a minimum of 2,000 pounds per square inch (psi) measured at beginning of hose reel.
D. Water Pump: Able to run a minimum of 2,000 psi discharge pressure to the nozzle while pulling full vacuum.

2.03 WATER

A. When water from fire hydrants is necessary, the contractor will be required to apply for a Hydrant Meter with the Town.
B. Provide temporary piping, valves, certified reduced pressure zone assembly, and other required items for handling potable water and wastewater.

PART 3 - EXECUTION

3.01 EXAMINATION

Contractor shall be aware of flow conditions, and be able to identify potential access problems to sewer access points.

3.02 APPLICATION

A. Line Cleaning: Clean designated SSSD lines using approved methods and equipment.
B. Manhole Cleaning: Include entire manhole interior, including manhole benches and walls. Incorporate into line cleaning operation by scouring walls with high velocity nozzle after pipe segment cleaning operation is complete.
C. Removal of Debris, Sewage and Solids: Remove and dispose. Do not discharge to other Town infrastructure such as manholes, ditches, catch basins, storm drains, etc. Disposal costs and regulatory compliance is the responsibility of the Contractor.

3.03 FIELD QUALITY CONTROL

A. Inspection: Provide television inspection per applicable PVSD.

3.04 CLEANING

A. Keep premises free from accumulations of waste materials, rubbish and other debris resulting from work.
B. Remove waste materials, rubbish, and debris from and about premises.
C. Remove tools, construction equipment and machinery, and surplus materials.
D. Restore to original condition portions of site not designated for alterations by any Contract Documents.

TOWN OF PRESCOTT VALLEY DESIGN AND CONSTRUCTION STANDARDS

TELEVISION INSPECTION

Statement of Purpose

All new public sewer and storm construction is subject to Television (TV) inspection prior to approval of as-built drawings and final acceptance by the Town of Prescott Valley (Town). Said requirement is based on Arizona Department of Environmental Quality (ADEQ) regulations. The Town also extends this requirement to: 1) all sewer and storm drainage infrastructure that has undergone repair or modification and 2) all sewer and storm drainage infrastructure that is situated in areas where nearby excavation is occurring or has occurred. Please note that the requirement for TV inspection of storm drainage only pertains to pipes 24 inches or larger.

PART 1 - GENERAL

1.01 BACKGROUND SUMMARY

A. This section includes TV inspection of sanitary sewer and storm drainage (SSSD) infrastructure.

1. Inspect SSSD interiors using color, closed-circuit television (CCTV) camera. Document inspection on DVD with audio location and date information, DVD title information, and continuous tape counter. Provide an electronic version in PDF and a hard copy of inspection reports.
2. Additional TV inspections may be required at other stages of operation if necessary to meet this specification.

B. Related Sections: Refer to the following section for related work:

1. "Sanitary Sewer and Storm Drainage Cleaning" per applicable PVSD.

1.02 SEQUENCE OF WORK

1. TV inspection must be performed prior to as-built acceptance.
2. TV inspection shall occur no earlier than seven (7) days after completion of backfill compaction and after mirror and leakage testing.
3. Clean SSSD lines and manholes per applicable PVSD prior to TV inspection. All pipes and manholes shall be free from rocks, mud, construction debris, or any other objects which hinder or limit the inspection.
4. TV inspection and cleaning shall be coordinated with Town staff a minimum of two (2) Town workdays in advance.
5. TV inspection shall occur prior to any final grading or asphalt / concrete work in the Right of Way.
6. On the day prior to TV inspection, the contractor shall supply adequate water to each section of pipe such that water runs through each downstream manhole. Water is necessary in order to provide the necessary visual indicators of sag (SAG) in the pipe / manholes and to properly mirror inspect the line. Please note that SAG in a pipe is also referred to in the industry as a “belly”.

Continued Next Page

1.03 SUBMITTALS

A. Quality Assurance: Submit one example DVD of previous sewer inspection work that shows operational and structural defects in SSSD, complete with audio commentary and inspection report(s). Prior to submittal finalize the DVD to prevent rerecording.
   1. DVD and inspection reports will be reviewed to determine if quality of CCTV image is acceptable, if defects were properly identified and documentation was in accordance to the specifications outlined in this PVSD.
   2. Modify equipment and/or inspection procedures to achieve report material of acceptable quality.
   3. Do not commence work prior to approval of report material quality by Town inspection staff.

B. Inspection Reports: Unless otherwise indicated, submit inspection reports to the Town that include the following as a minimum:
   1. Project title
   2. Name of: Town of Prescott Valley
   3. Street name or general location
   4. Time of day
   5. Manhole to manhole pipe section with Town Geographical Information System (GIS) designations. Reference GIS manhole numbers in report.
   6. Pipe segment length
   7. Pipe material
   8. Line size
   9. Compass direction of viewing
   10. Direction of camera's travel
   11. Pipe depth
   12. Operator name and certification I.D.
   13. Direction of normal water flow.
   14. Tape counter reading at beginning and end of each manhole to manhole pipe segment.
   15. SAG documentation. A mechanical gauge will be mounted in front of the camera to show the depth of any standing water due to SAG in the invert. The gauge shall clearly indicate markings of ¼ " increments. Corrective action requirements for SAG are described per Table 1.

C. DVDs: Prior to submittal, finalize the DVD to prevent re-recording. DVDs must be readable with standard Windows Media Player viewing software.

D. Maintain copy of all inspection documentation (DVDs, databases, and reports) for duration of work and warranty period.

E. The Contractor shall bear all costs incurred in correcting deficiencies found during the TV inspection and shall bear the cost of follow-up TV verification for repairs. Only the repaired reaches shall require follow-up TV inspection, mirror and leakage testing.

F. The Contractor shall provide a TV warranty inspection no sooner than 22 months or later than 23 months after initial acceptance. Said requirement is based on two year warranty for construction projects. The Contractor is responsible for all warranty repairs and TV re-inspection of repaired areas until the Town deems the repairs acceptable.

Continued Next Page

Table 1 - Corrective Action Requirements for SAG

Description	Observed SAG	Correction Action Required
8” to 12” Dia. Pipe	Less than or equal to ½”	None
8” to 12” Dia. Pipe	Greater than ½” but less than or equal to 1“	Yes if longer than 10' or more than 3 occurrences in 100'
12” to 24” Dia. Pipe	Less than or equal to 1”	None
12” to 24” Dia. Pipe	Greater than 1” but less than or equal to 1 ½”	Yes if longer than 20' or more than 3 occurrence in 100'
Greater than 24” Dia. Pipe	Greater than 1 ½”	Yes
Pipe entering or exiting manhole	Any	Yes

PART 2 - PRODUCTS

2.01 MATERIALS AND EQUIPMENT

A. DVD: 120 minute minimum, high-quality color, type DVD-R, DVD-RW, or DVD+R
   1. Audio portion of composite DVD shall be sufficiently free from electrical interference and background noise to provide complete intelligibility of oral report.
   2. Store in upright position with temperature range of 45 to 80 degrees F (7 to 27 degrees C) in an appropriate CD or DVD case to prevent scratches.
   3. Identify each disk with tape labels showing Town's name, Project Name, Street name or general location, Contractor's name, Operator name and each manhole-to-manhole pipe segment of sewer line represented on DVD. Contractor shall provide an index or table of contents if more than one segment is on the disk.

B. Television Inspection Camera(s): Equipped with rotating head, capable of 90-degree rotation from horizontal and 360-degree rotation about its centerline.
   1. Minimum Camera Resolution: 400 vertical lines and 460 horizontal lines.
   2. Camera Lens: Not less than 140 degree viewing angle, with automatic or remote focus and iris controls.
   3. Focal Distance: Adjustable through range of 2 inches to infinity.
   4. Camera(s) shall be intrinsically safe and operative in 100 percent humidity conditions or flammable / explosive conditions.
   5. Lighting Intensity: Remote-controlled and adjusted to minimize reflective glare.
   6. Lighting and Camera Quality: Provide clear, in-focus picture of entire inside periphery of sewer.

C. Footage Counter: Measures distance traveled by camera in sewer, accurate to plus or minus 2 feet (0.6 m) in 1,000 feet (305 m). Onscreen text must be clearly legible.

D. DVD Titling: Each segment shown on the DVD should have its own Chapter titled with the beginning and end point of the pipe segment.

Continued Next Page

PART 3 - EXECUTION

3.01 INSPECTION REQUIREMENTS

A. Access: Town staff shall have access to observe televised operations at all times.

B. DVD Commentary: Record the following information on audio track of inspection DVD: narrative of location, direction of view, manhole numbers, pipe diameter, material, date, time of inspection, and location of laterals and other key features.

1. DVD shall visually display this information at beginning and end of each manhole-to-manhole pipe segment.
2. DVD between manholes shall visually display length in feet from starting point of given segment.

C. SSSD Identification: DVD and inspection documentation shall include line and manhole identifiers shown on Drawings provided by Town.

D. Image Perspective: Camera image shall be down center axis of pipe when camera is in motion.

1. Provide 360-degree sweep of pipe interior at joints and points of interest, to more fully document existing condition of sewer.
   A. Points of interest include, but are not limited to the following: defects, cracks, voids, joints, laterals, encrustations, mineral deposits, debris, SAG, sediment, and any location determined not to be clean or part of an improper liner installation, and defects in liner that include, but are not limited to bumps, folds, tears, and dimples.
2. Contractor shall provide still photos of all call-outs or deficiencies as part of the inspection report.
3. Cabling system employed to transport camera and transmit its signal shall not obstruct camera's view.

E. SSSD Reach Length: Physically measure and record length of each sewer segment of pipe from centerline of its terminal manholes.

F. Inspection Rate: Camera shall be pulled through sewer in either direction, but both inspections are to be in same direction. Maximum rate of travel shall be 30 feet per minute when recording.

3.04 FIELD QUALITY CONTROL

A. Town and Engineer of Record will review DVD video and reports to ensure compliance with requirements listed in this specification.

B. If SSSD line is not adequately clean, it shall be re-cleaned and TV inspected by Contractor at no additional cost to the Town.

C. All TV pipe inspection operators must be certified by the Pipeline Assessment Certification Program (PACP) or the National Association of Sewer Service Companies (NASSCO).

ConmicShield® Additive

Specifications for Sanitary Sewer Structures Utilizing
Precast Concrete, Cast-In-Place and Shotcrete

Precast Concrete Manholes / Sewer Structures

- Antimicrobial additive, ConmicShield®, shall be used to render the concrete uninhabitable for bacteria growth.
- The liquid antibacterial additive shall be an EPA registered material and the registration number shall be submitted for approval prior to use in the project.
- The amount to be used shall be as recommended by the manufacturer of the antibacterial additive. This amount shall be included in the total water content of the concrete mix design.
- The additive shall be added into the concrete mix water to insure even distribution of the additive throughout the concrete mixture.
- The antibacterial additive shall have successfully demonstrated prevention of MIC in sanitary sewers for ten or more years.
- The antibacterial shall be used by factory certified precast concrete plants.

Acceptance: Acceptance shall be a letter of certification from the precaster to the Town and Engineer of Record (EOR) stating that the correct amount and correct mixing procedure were followed for all antimicrobial concrete.
Quality Assurance: The precaster shall retain two labeled specimens from each production run. One set shall be retained by the precaster and the other set shall be sent to CONSHIELD Technologies, Inc. or independent laboratory as directed by the EOR for verification on a random or as needed basis.
Field Repairs: Field repairs to the precast concrete shall be made using ConmicShield® Joint Set Grout pre-portioned and factory packaged that requires the addition of no other components. This repair grout may be used for filling joints, lift holes, damaged areas, benches and similar.
Product Surface Marking: The name of the antimicrobial additive shall be plainly stenciled on the exterior and interior of each piece. The contractor shall spray CS IDENTIFIER™, green colored sealer, onto the interior surface after installing.

Cast-in-Place Manholes / Sewer Structures

- Antimicrobial additive, ConmicShield®, shall be used to render the concrete uninhabitable for bacteria growth.
- The liquid antibacterial additive shall be an EPA registered material and the registration number shall be submitted for approval prior to use in the project.
- The amount to be used shall be as recommended by the manufacturer of the antibacterial additive. This amount shall be included in the total water content of the concrete mix design.
- The additive shall be added into the concrete mix water to insure even distribution of the additive throughout the concrete mixture.
- The ready-mix supplier shall submit a letter of certification to the Town and EOR stating that the correct amount and correct mixing procedure were followed for all antimicrobial concrete.
- The antibacterial additive shall have successfully demonstrated prevention of MIC in sanitary sewers for ten or more years.
- The antibacterial shall be used by factory certified plants and contractors.
- After the concrete takes initial set, ConmicShield® color identifier-indicator (CS IDentifier®) shall be applied to the interior surface.

Acceptance: Acceptance shall be a letter of certification from the concrete provider to the Town and EOR stating that the correct amount and correct mixing procedure were followed for all antimicrobial concrete.
Quality Assurance: The concrete producer shall retain two labeled specimens from each production run. One set shall be retained by the concrete producer and the other set shall be sent to CONSHIELD Technologies, Inc. or independent laboratory as directed by the engineer for verification on a random or as needed basis.
Field Repairs: Field repairs to the precast concrete shall be made using ConmicShield® Joint Set Grout pre-portioned and factory packaged that requires the addition of no other components. This repair grout may be used for filling joints, lift holes, damaged areas, benches and similar.

Continued Next Page

Shotcrete for Sewer Structures

- Antimicrobial additive, ConmicShield® shall be used to render the shotcrete uninhabitable for bacteria growth.
- The liquid antibacterial additive shall be an EPA registered material and the registration number shall be submitted for approval prior to use in the project.
- The amount to be used shall be as recommended by the manufacturer of the antibacterial additive. This amount shall be included in the total water content of the shotcrete mix design for wet mix shotcrete.
- For both wet and dry shotcrete, the additive shall be added into the shotcrete mix water to ensure even distribution of the additive throughout the shotcrete.
- The contractor performing the shotcrete work shall submit a letter of certification to the Town and EOR stating that the correct amount and correct mixing procedure was followed for all antimicrobial shotcrete.
- The antibacterial additive shall have successfully demonstrated prevention of MIC in sanitary sewers for ten or more years.
- The antibacterial shall be used by factory certified applicators.
- For rehabilitation of existing sewer structures, ConmicShield® solution shall be spray applied to the cleaned and prepared interior surface prior to applying shotcrete to ensure removal of all residual bacteria.
- ConmicShield® color identifier-indicator (CS IDentifier ®) shall be spray applied to the surface after the initial set.

Acceptance: Acceptance shall be a letter of certification from the concrete provider to the Town and EOR stating that the correct amount and correct mixing procedure were followed for all antimicrobial concrete.

Quality Assurance: The contractor shall retain two labeled specimens from each batch. One set shall be retained by the contractor and the other set shall be sent to CONSHIELD Technologies, Inc. or independent laboratory as directed by the EOR for verification on a random or as needed basis.

Field Repairs: Field repairs to the precast concrete shall be made using ConmicShield® Joint Set Grout pre-portioned and factory packaged that requires the addition of no other components. This repair grout may be used for filling joints, lift holes, damaged areas, benches and similar.

ConMICShield® liquid antimicrobial admixture shall be obtained from ConShield Technologies, Inc. Active ingredient EPA Registration 75174-2-47000.

ConShield Technologies Inc.
541 Tenth Street NW #233
Atlanta, GA 30318-5713
Call Toll Free: 877-543-2094
Fax: 770-438-2131
http://www.conshield.com info@conshield.com

PV STANDARD DETAIL	CONSHIELD ADDITIVE	TOWN ENGINEER	REVISED: 3/16	DETAIL No. 446PV

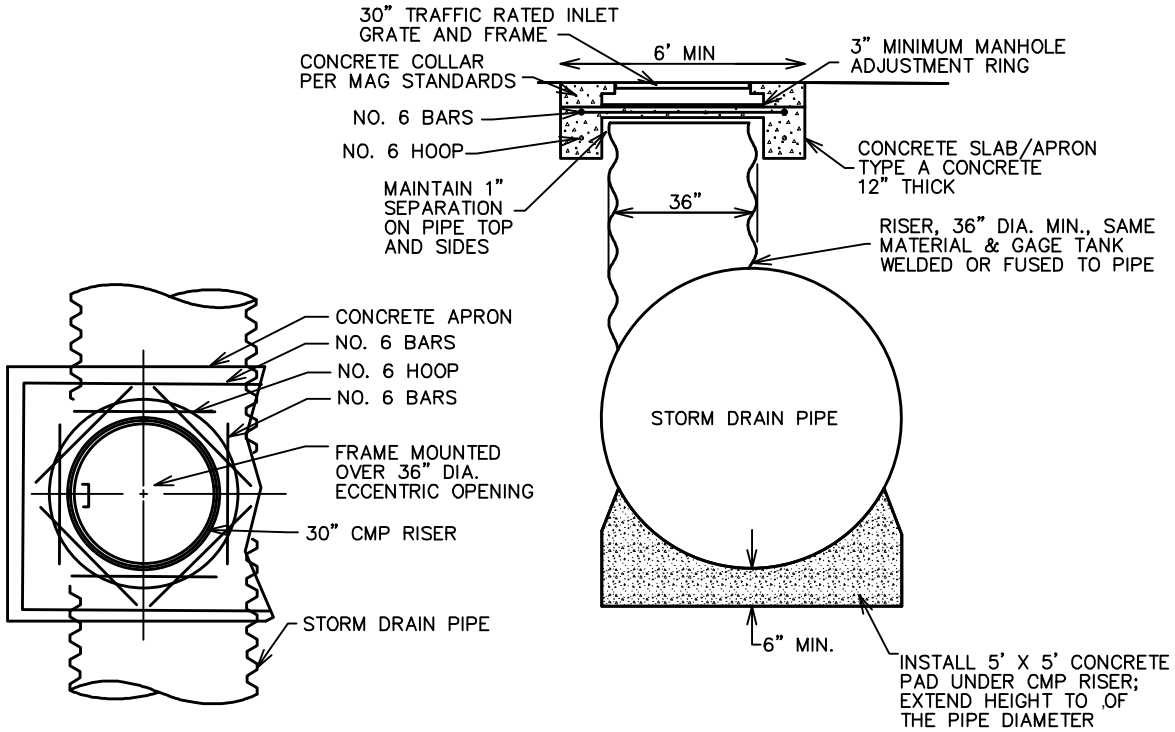

NOTES:
1. USE ADJUSTING BLOCKS AS REQUIRED TO BRING FRAME TO GRADE
2. ALL MATERIALS MUST BE CORROSION RESISTANT.
3. PREFABRICATED TEES ARE PERMITTED INSTEAD OF CMP ACCESS RISERS

CMP MANHOLE ACCESS RISER

PV STANDARD DETAIL	CMP MANHOLE ACCESS RISER	TOWN ENGINEER	REVISED: 3/16	DETAIL No. 523PV-3

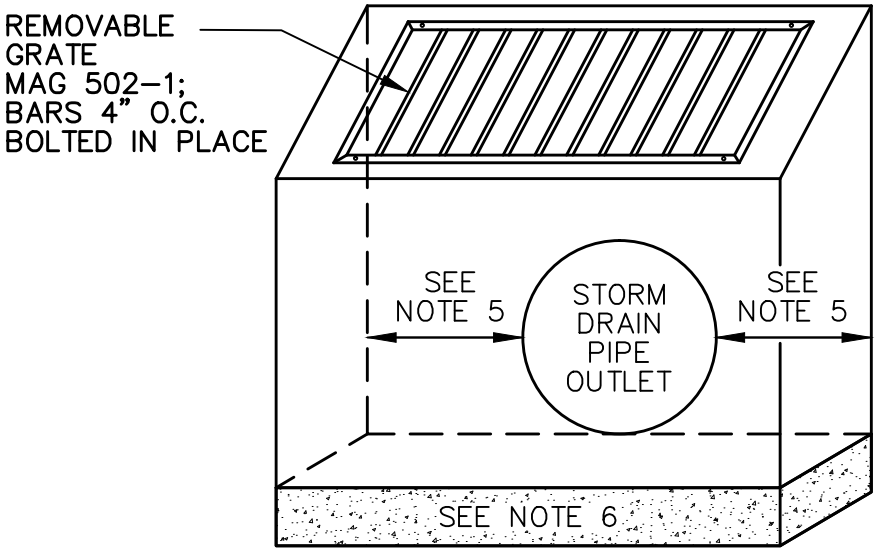

FRONT VIEW

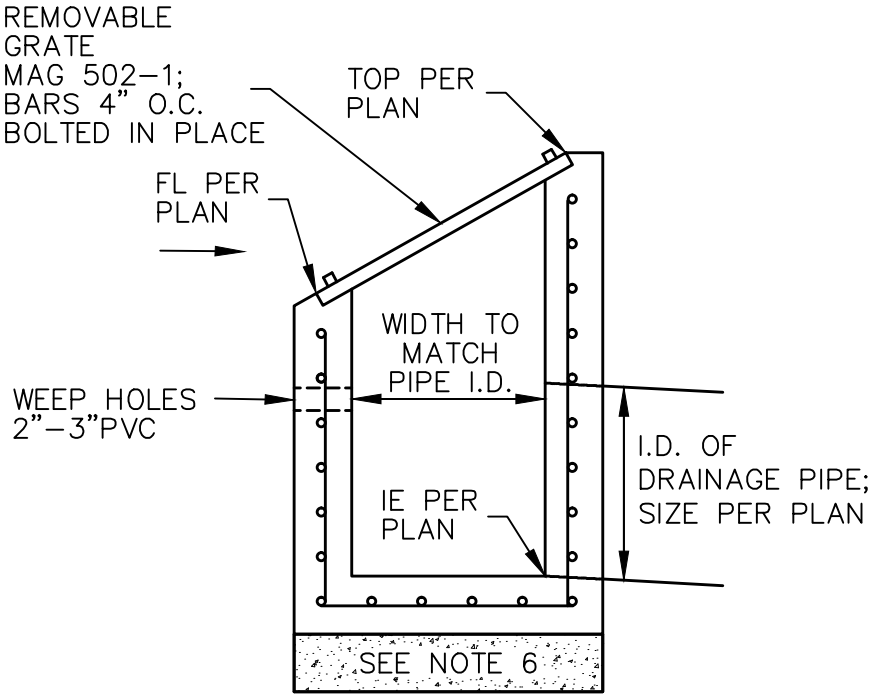

SIDE VIEW

NOTES:

1. HIGH POINT OF HEADWALL SHALL NOT PROJECT MORE THAN 3" ABOVE GROUND.
2. ALL CONCRETE SHALL BE CLASS A.
3. ALL REBAR SHALL BE NO. 4, 12" O.C. AND 3" CLEAR TO INSIDE OF WALLS AND FLOOR.
4. ALL CONCRETE THICKNESS SHALL BE 6".
5. 12" FROM OUTSIDE OF PIPE TO OUTSIDE OF CONCRETE.
6. MINIMUM 6" A.B. UNDER CONCRETE, COMPACTED TO 95%.

PV STANDARD DETAIL	INLET DROP STRUCTURE	TOWN ENGINEER	REVISED: 3/16	DETAIL No. 523PV-6

Hydroseed Requirements

Hydroseeding consists of scarifying the surface of disturbed areas and applying a mixture of fiber, seed, fertilizer, and stabilizing emulsion.

Contractor / developer shall utilize the seed mix noted per Table 1 for restoration unless otherwise approved by the Town. The Town Inspector shall be notified when hydroseeding will be performed and by whom at least 48 hours in advance. The Inspector, at his/her option, may witness application to verify procedures are being followed correctly.

The developer / contractor is responsible for providing certification of seed mix to the Town Inspector during witness activities or if no witness occurs, prior to punch list inspection performed by the Town. Stabilizing emulsion and fertilizer mix shall be determined by the contractor to insure germination at the rates specified by the Town.

Acceptance criteria shall be 70% seed germination within a one year period. Areas not evidencing a minimum of 70% germination within the one year period, as determined by the Town, shall be re-seeded at no cost to the Town. When acceptable final stabilization has been determined, if required, a Notice of Termination shall be filed by the contractor.

Table 1 - Southwest Native Grass Seed Mix

Botanical Name	Common Name
Bouteloua curtipendula	Sideoats Grama
Bouteloua gracilis	Blue Grama
Setaria vulpiseta	Plains Bristlegrass
Sporobolus airoides	Alkali Sacaton
Achnatherum hymenoides	Indian Ricegrass
Muhlenbergia wrightii	Spike Muhly
Sporobolus cryptandrus	Sand Dropseed

The seed mix shall be dispersed at a minimum of 8 pounds per acre. The Southwest Native Grass Seed Mix is available from a number of vendors. Two of them, current per development of this PVSD, are as follows:

Outside Pride
http://www.outsidepride.com

Seedland
http://www.seedland.com

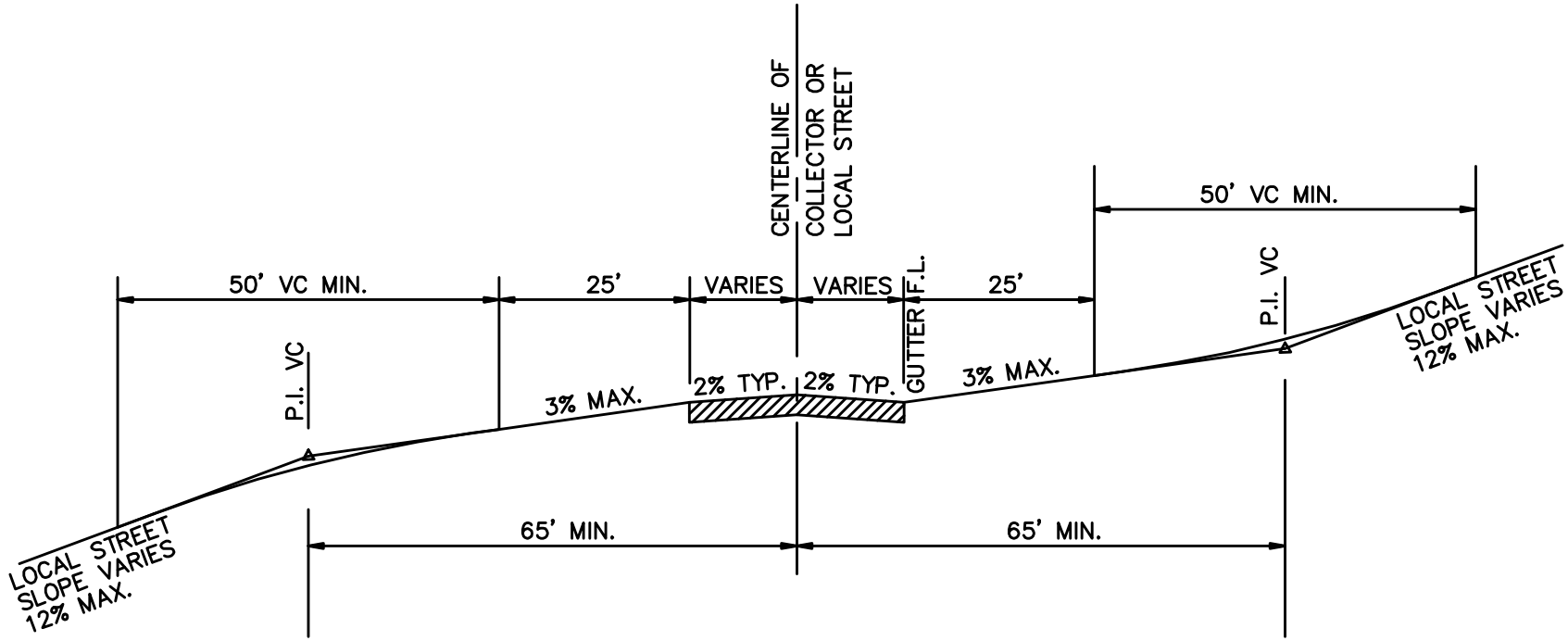

THIS STANDARD SHALL BE APPLIED TO EACH MINOR LEG OF AN INTERSECTION THAT EXCEEDS 8% RUNNING SLOPE WITHIN THE INTERSECTION. 3% MAY BE ALLOWED WITHIN THE INTERSECTION TO BE DETERMINED BY AGENCY ENGINEER. GRADES SHOWN ARE AT MINOR STREET CENTERLINE. INDIVIDUAL CONSIDERATION SHALL BE GIVEN AT THE CURB LINE TO INSURE POSITIVE DRAINAGE AT THE VALLEY GUTTER. SUITABLE MEASURES SHALL BE TAKEN WHERE NECESSARY TO INSURE THAT THE PROPER DRAINAGE PATTERN IS OBTAINED AT THE INTERSECTION. LARGER SCALE INTERSECTION DETAILS MAY BE REQUIRED.

QUAD CITY STANDARD DETAIL	INTERSECTION APPROACH TYPICAL SECTION	REVISED: 3/16	DETAIL No. 600Q

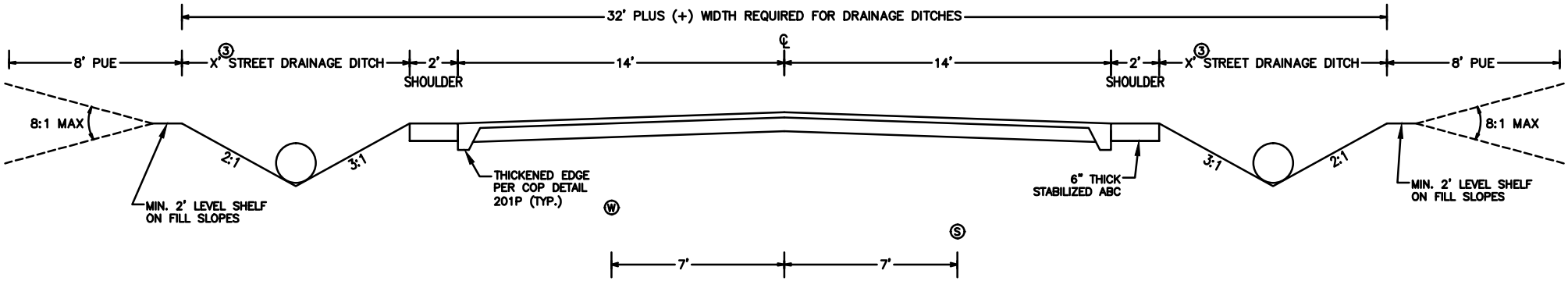

DESIGN SPEED = 30MPH
POSTED SPEED = 25MPH

NOTES:

1. PLACE "NO PARKING" SIGNS ON BOTH SIDES OF STREET AT 300' SPACING.
2. MINIMUM 3" AC OVER 6" ABC PAVEMENT STRUCTURE OR PER APPROVED PAVEMENT DESIGN REPORT, WHICHEVER IS GREATER.
3. PER DRAINAGE DESIGN.

COP STANDARD DETAIL	RURAL LOCAL RESIDENTIAL	CITY ENGINEER	REVISED: 05/15	DETAIL No. 601P

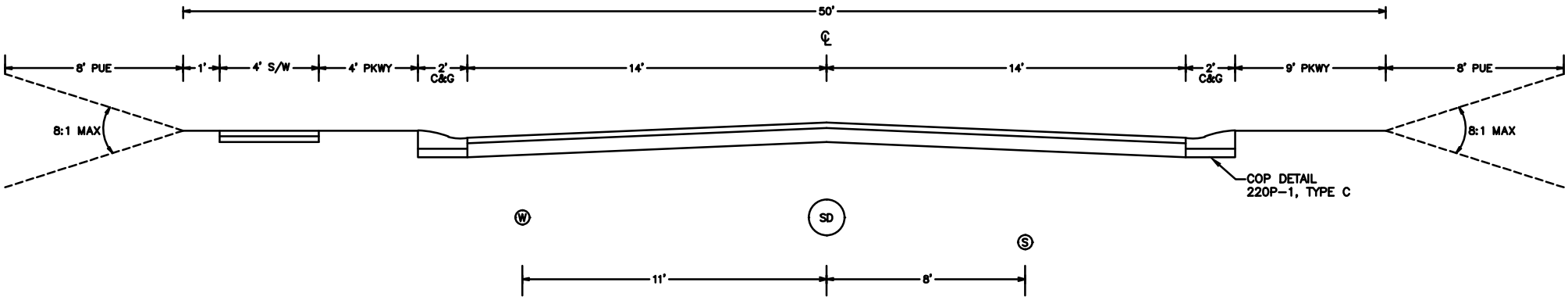

DESIGN SPEED = 30MPH
POSTED SPEED = 25MPH

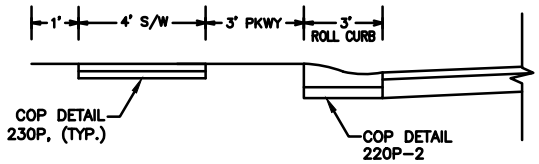

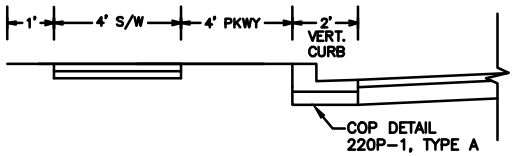

NOTES:

1. PLACE "NO PARKING" SIGNS ON SIDEWALK SIDE.
2. VERTICAL CURB SHALL BE USED AT CURB RETURNS, ADJACENT TO COMMON AREAS, AND OTHER AREAS TO RESTRICT VEHICLE ACCESS.
3. ROLLED CURB SHALL BE USED ADJACENT TO RESIDENTIAL LOTS.
4. SIX INCH HIGH ROLLED CURB, COP DETAIL 220P, MAY BE USED TO INCREASE STREET DRAINAGE CAPACITY.
5. MINIMUM 4" AC OVER 6" ABC PAVEMENT STRUCTURE OR PER APPROVED PAVEMENT DESIGN REPORT, WHICHEVER IS GREATER.

COP STANDARD DETAIL	LOCAL RESIDENTIAL STREET	CITY ENGINEER	REVISED: 05/15	DETAIL No. 602P

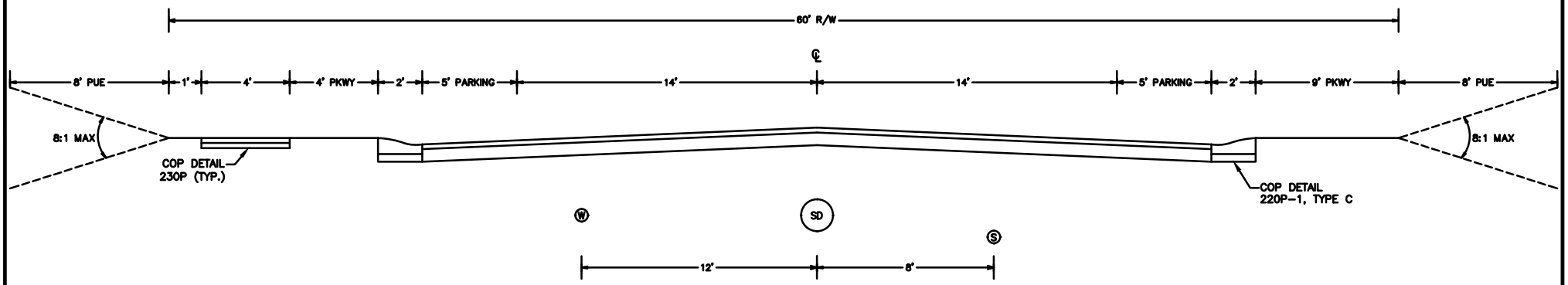

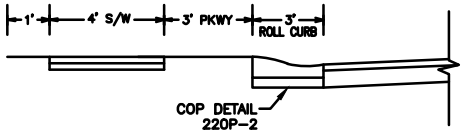

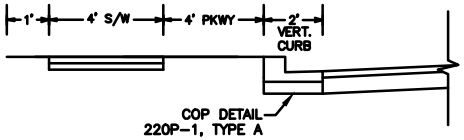

DESIGN SPEED = 30MPH
POSTED SPEED = 25MPH

NOTES:

1. VERTICAL CURB SHALL BE USED AT CURB RETURNS, ADJACENT TO COMMON AREAS, AND OTHER AREAS TO RESTRICT VEHICLE ACCESS.
2. ROLLED CURB SHALL BE USED ADJACENT TO RESIDENTIAL LOTS.
3. SIX INCH HIGH ROLLED CURB, COP DETAIL 220P-2, MAY BE USED TO INCREASE STREET DRAINAGE CAPACITY.
4. MINIMUM 4" AC OVER 6" ABC PAVEMENT STRUCTURE OR PER APPROVED PAVEMENT DESIGN REPORT, WHICHEVER IS GREATER.

COP STANDARD DETAIL	RESIDENTIAL COLLECTOR	CITY ENGINEER	REVISED: 05/15	DETAIL No. 603P

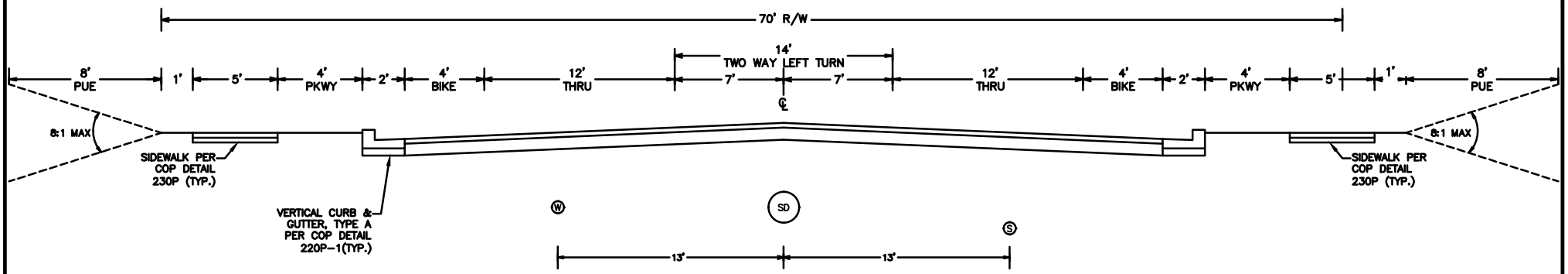

DESIGN SPEED = 40MPH
POSTED SPEED = 30 TO 35MPH

NOTE:

MINIMUM 5" AC OVER 8" ABC PAVEMENT STRUCTURE OR PER APPROVED PAVEMENT DESIGN REPORT, WHICHEVER IS GREATER.

COP STANDARD DETAIL	COMMERCIAL/INDUSTRIAL COLLECTOR	CITY ENGINEER	REVISED: 05/15	DETAIL No. 604P

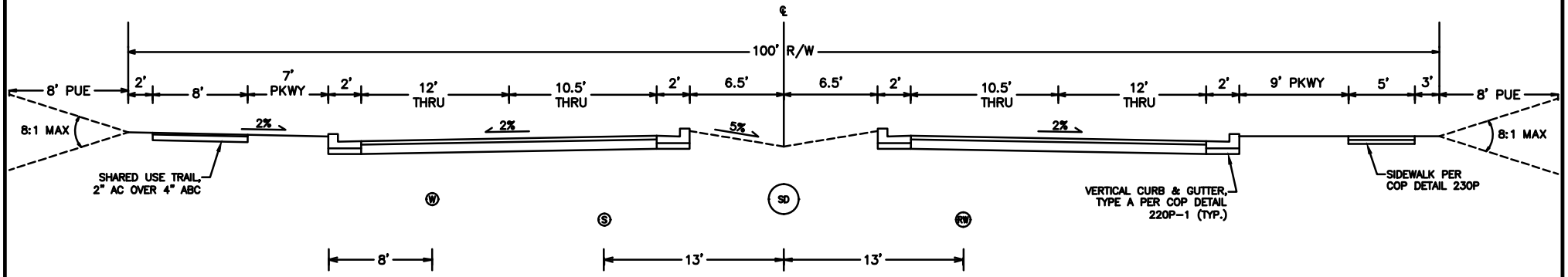

DESIGN SPEED = 45MPH
POSTED SPEED = 35 TO 40MPH

NOTE:

MINIMUM 6" AC OVER 10" ABC PAVEMENT STRUCTURE OR PER APPROVED PAVEMENT DESIGN REPORT, WHICHEVER IS GREATER.

COP STANDARD DETAIL	MINOR ARTERIAL	CITY ENGINEER	REVISED: 05/15	DETAIL No. 605P

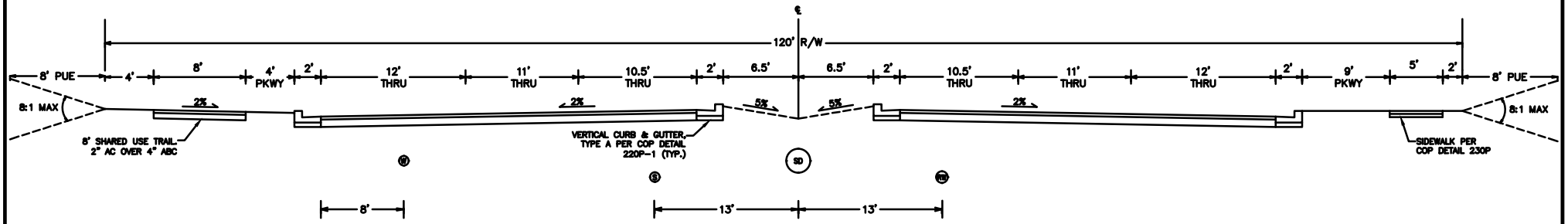

DESIGN SPEED = 55MPH
POSTED SPEED = 45MPH

NOTE:

MINIMUM 6" AC OVER 10" ABC PAVEMENT STRUCTURE OR PER APPROVED PAVEMENT DESIGN REPORT, WHICHEVER IS GREATER.

COP STANDARD DETAIL	MAJOR ARTERIAL	CITY ENGINEER	REVISED: 05/15	DETAIL No. 606P

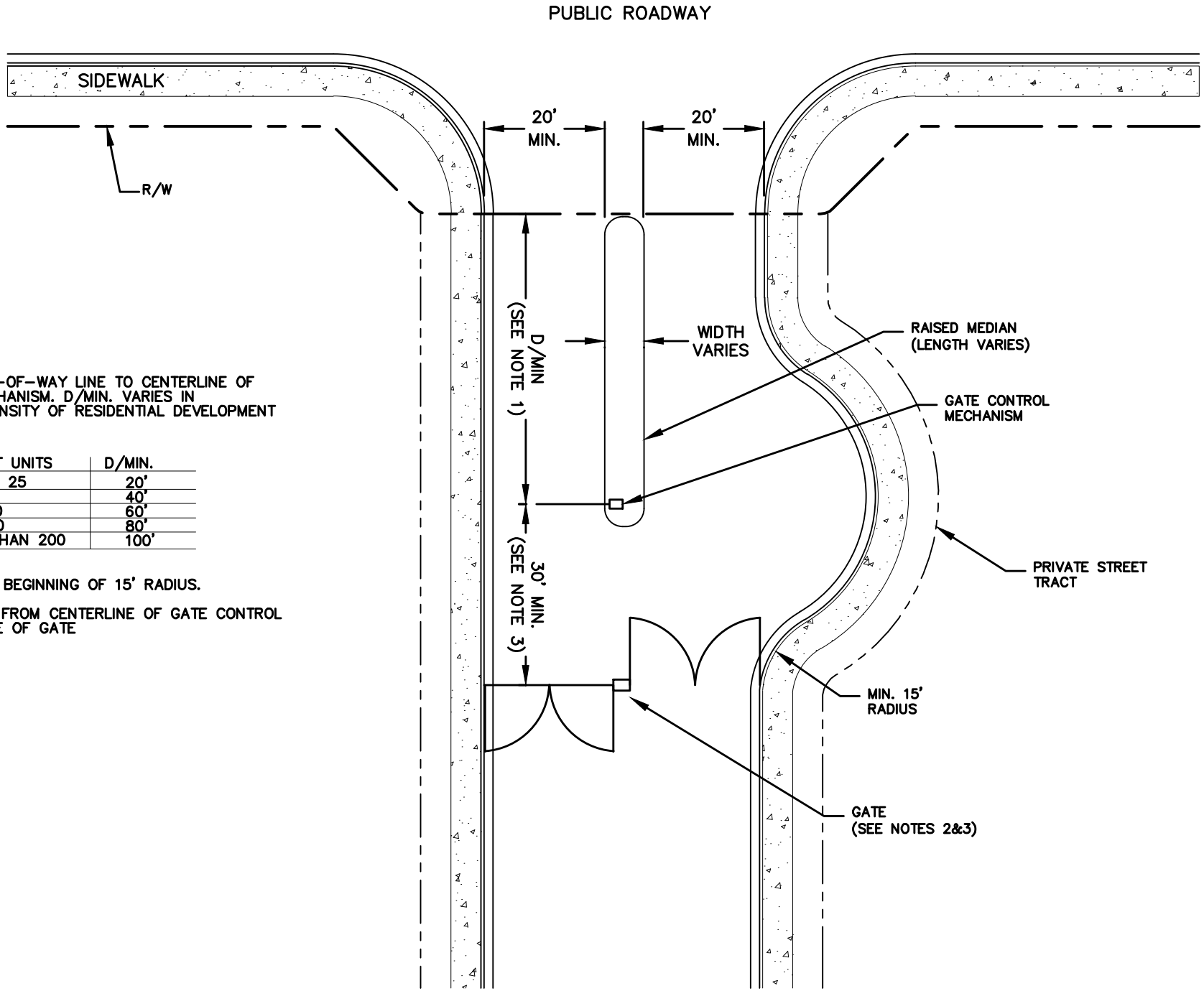

NOTES:

1. D/MIN. FROM RIGHT-OF-WAY LINE TO CENTERLINE OF GATE CONTROL MECHANISM. D/MIN. VARIES IN ACCORDANCE TO DENSITY OF RESIDENTIAL DEVELOPMENT AS SHOWN BELOW:

DEVELOPMENT UNITS	D/MIN.
LESS THAN 25	20'
25 TO 100	40'
101 TO 150	60'
151 TO 200	80'
GREATER THAN 200	100'

2. GATE INSTALLED AT BEGINNING OF 15' RADIUS.
3. 30' MIN. DIMENSION FROM CENTERLINE OF GATE CONTROL MECHANISM TO FACE OF GATE

QUAD CITY STANDARD DETAIL	PRIVATE GATED ACCESS AT PUBLIC ROADWAY	REVISED: 3/16	DETAIL No. 610Q

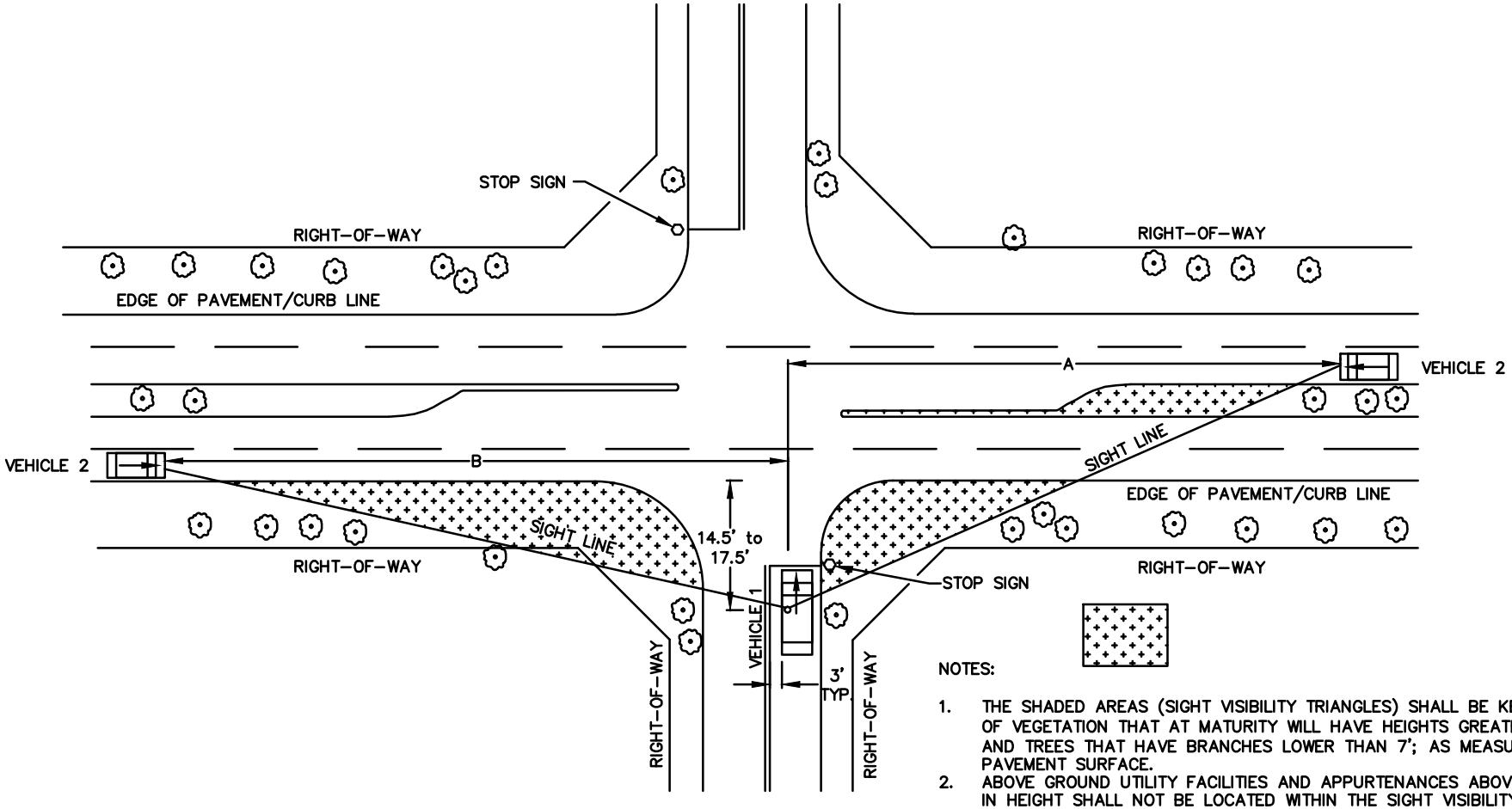

DESIGN SPEED (85th PERCENTILE) OF INTERSECTING ROADWAY	SIGHT DISTANCE FOR PASSENGER VEHICLE 1 TO TURN LEFT OR RIGHT				
	A				B
	1-LANE	2-LANE	3-LANE/2-LANE & MEDIAN	3-LANE & MEDIAN	
25 MPH	280'	295'			240'
30 MPH	335'	355'			290'
35 MPH	390'	415'	440'	465'	335'
40 MPH	445'	475'	500'	530'	385'
45 MPH	500'	530'	565'	600'	430'
50 MPH	555'	590'	625'	665'	480'
55 MPH	610'	650'	690'	730'	530'
60 MPH		710'	750'	795'	575'
65 MPH		765'	815'	860'	625'

NOTES:

1. THE SHADED AREAS (SIGHT VISIBILITY TRIANGLES) SHALL BE KEPT CLEAR OF VEGETATION THAT AT MATURITY WILL HAVE HEIGHTS GREATER THAN 3' AND TREES THAT HAVE BRANCHES LOWER THAN 7'; AS MEASURED FROM PAVEMENT SURFACE.
2. ABOVE GROUND UTILITY FACILITIES AND APPURTENANCES ABOVE 3 FEET IN HEIGHT SHALL NOT BE LOCATED WITHIN THE SIGHT VISIBILITY TRIANGLES.
3. SIGNAGE APPROVED BY THE CITY FOR USE IN THE ROW MAY BE LOCATED WITHIN THE SIGHT VISIBILITY TRIANGLES.
4. THE LINE OF SIGHT SHALL BE SHOWN AT INTERSECTIONS ON ALL LANDSCAPING PLANS, GRADING PLANS, AND TENTATIVE TRACT PLANS WHERE SAFE SIGHT DISTANCE IS QUESTIONABLE. IN CASES WHERE AN INTERSECTION IS LOCATED ON A VERTICAL CURVE, A PROFILE OF THE SIGHT LINE MAY BE REQUIRED.
5. TO ESTABLISH THE LINE OF SIGHT, VEHICLE 1 SHOULD BE POSITIONED SO THAT THE DRIVERS EYE IS 14.5 TO 17.5' BACK FROM THE EDGE OF PAVEMENT/ FACE OF CURB AND 3.5' ABOVE THE PAVEMENT. DRIVER IS ASSUMED TO BE 3.0' RIGHT OF CENTER LINE IN LANE.
6. APPROACH VEHICLE (VEHICLE 2) IS POSITIONED IN THE CENTER OF ITS LANE AND ASSUMED TO BE 4.25' ABOVE THE PAVEMENT.
7. DRAWING DEPICTS TYPICAL PASSENGER CAR SITUATION WITHOUT GRADES. ADJUSTMENTS FOR GRADES SHALL BE MADE PER AASHTO.
8. EASEMENTS TO BE SHOWN AND DIMENSIONED ON FINAL PLAT.

A = SIGHT DISTANCE TO RIGHT FOR VEHICLE 1
B = SIGHT DISTANCE TO LEFT FOR VEHICLE 1

COP STANDARD DETAIL	INTERSECTION SIGHT VISIBILITY TRIANGLES	CITY ENGINEER	REVISED: 05/15	DETAIL No. 611P

GRAVEL ACCESS ROAD

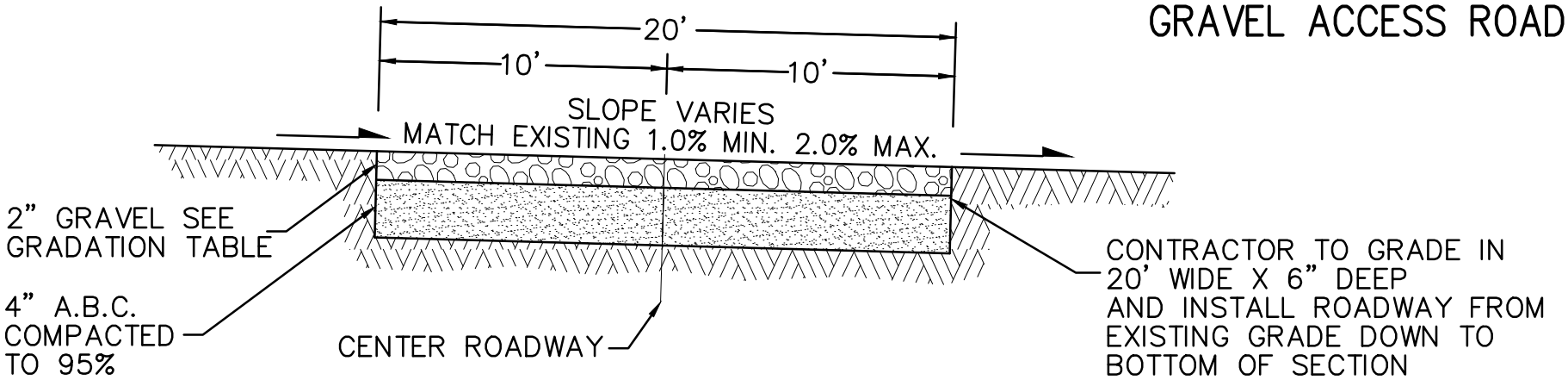

DETAIL "A"

Not To Scale

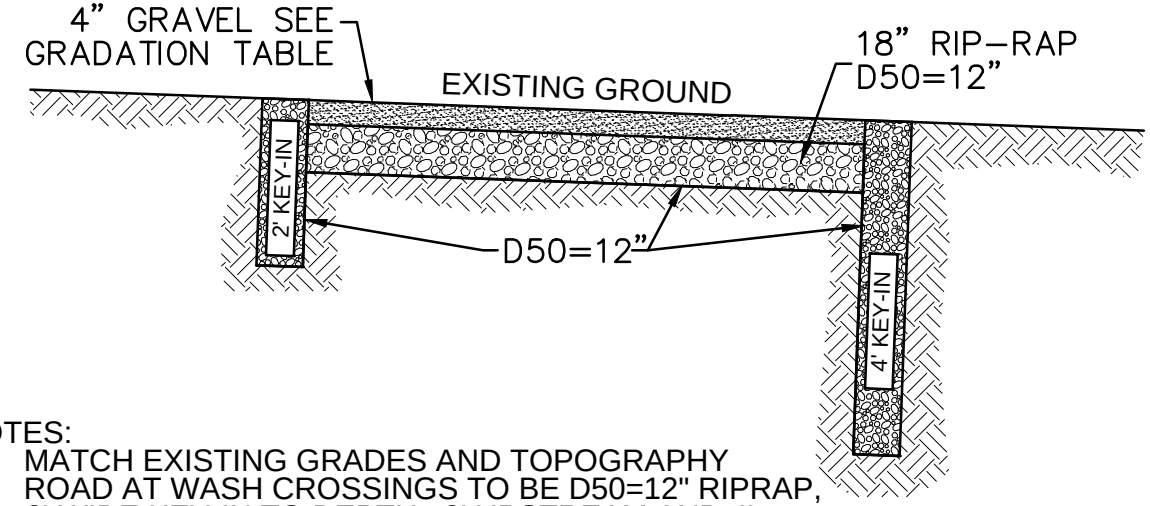

Crushed Aggregate* Gradation Table

Sieve Sizes (square openings)	Percentage by Weight Passing Sieve
2"	100
1.5"	50-90
1.25"	30-50
1"	20-30
0.75"	0-20

*CRUSHED AGGREGATE SHALL CONSIST OF CRUSHED ROCK WITH 75% OF THE SPECIFIED SIZE HAVING AT LEAST ONE FRACTURED FACE TESTED IN ACCORDANCE WITH ARIZ-212.

GRADATION TABLE FOR ROAD SECTIONS A & B

NOTES:
1. MATCH EXISTING GRADES AND TOPOGRAPHY
2. ROAD AT WASH CROSSINGS TO BE D50=12" RIPRAP, 2'-WIDE KEY-IN TO DEPTH, 2' UPSTREAM AND 4' DOWNSTREAM
3. FILL VOIDS WITH NATIVE MATERIAL AFTER PLACEMENT

DETAIL "B" – IN LOW WATER CROSSING

Not To Scale

COP STANDARD DETAIL	UTILITY EASEMENT ACCESS ROAD	CITY ENGINEER	REVISED: 05/15	DETAIL No. 612P

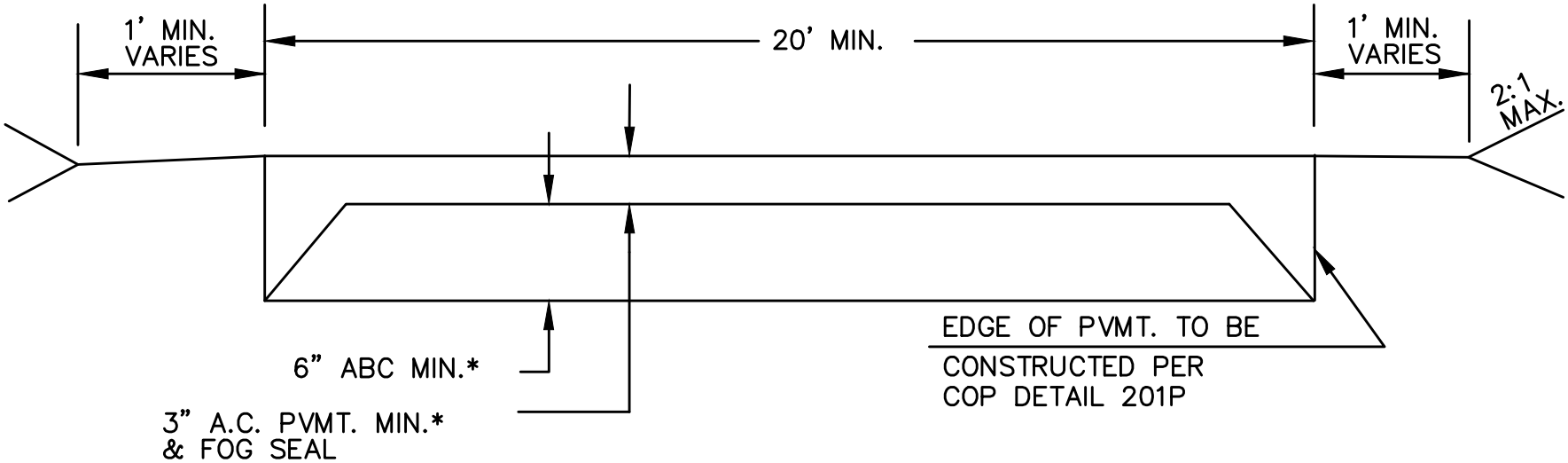

TYPICAL CROSS SECTION

(NO SCALE)

* NOTE:
ACTUAL STRUCTURAL SECTION SHALL BE DETERMINED BY GEO-TECHNICAL ENGINEER & DESIGNED FOR HEAVY EQUIPMENT

COP STANDARD DETAIL	FIRE LANE ACCESS	CITY ENGINEER	REVISED: 3/16	DETAIL No. 614P

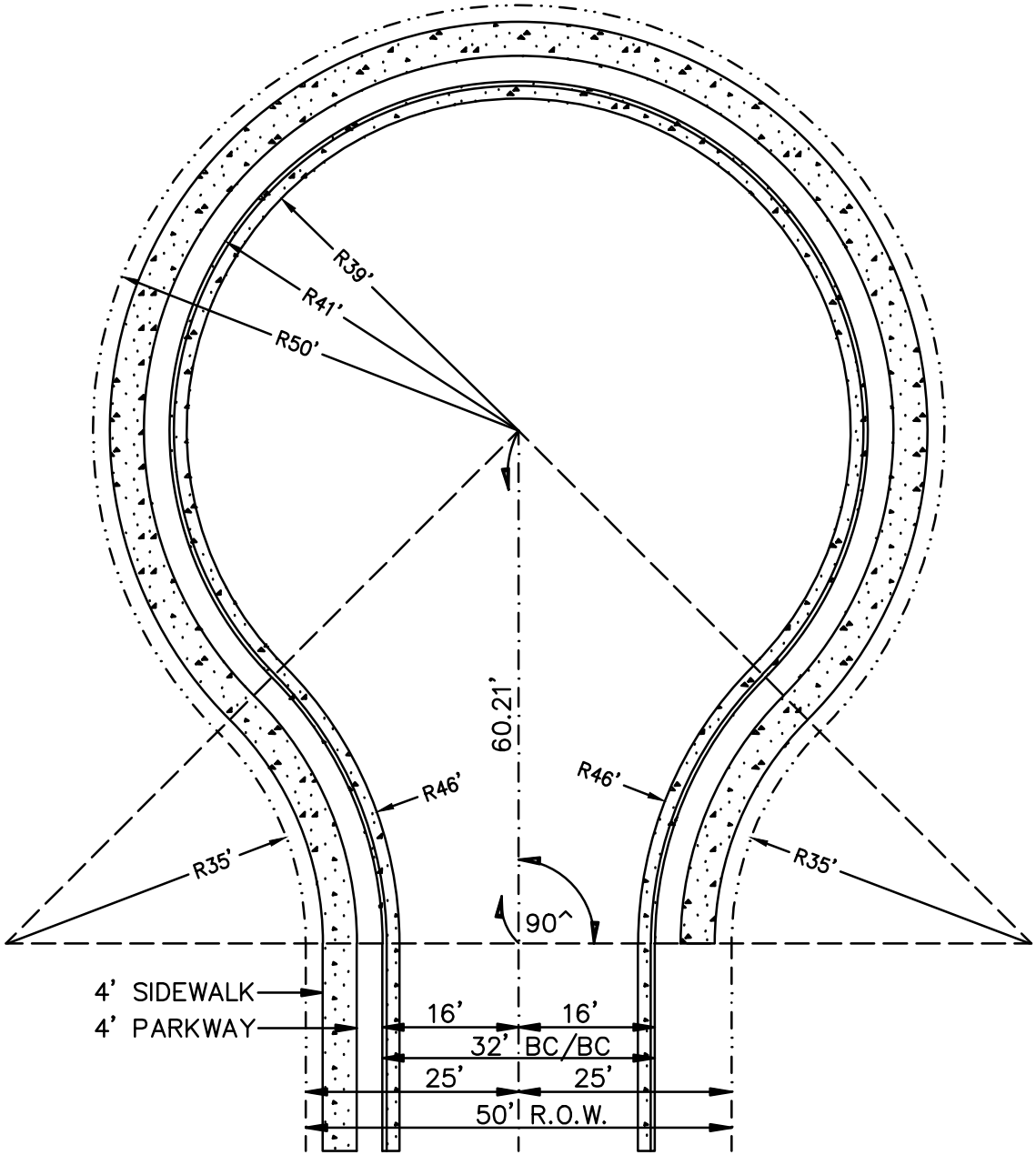

NOTE:

ADD 1' TO BACK OF CURB DIMENSION WHERE 6" ROLL CURB IS USED.

COP STANDARD DETAIL	CUL-DE-SAC FOR 50' R.O.W. STREET	CITY ENGINEER	REVISED: 05/15	DETAIL No. 620P-1

NOTE:

ADD 1' TO BACK OF CURB DIMENSION WHERE 6" ROLL CURB IS USED.

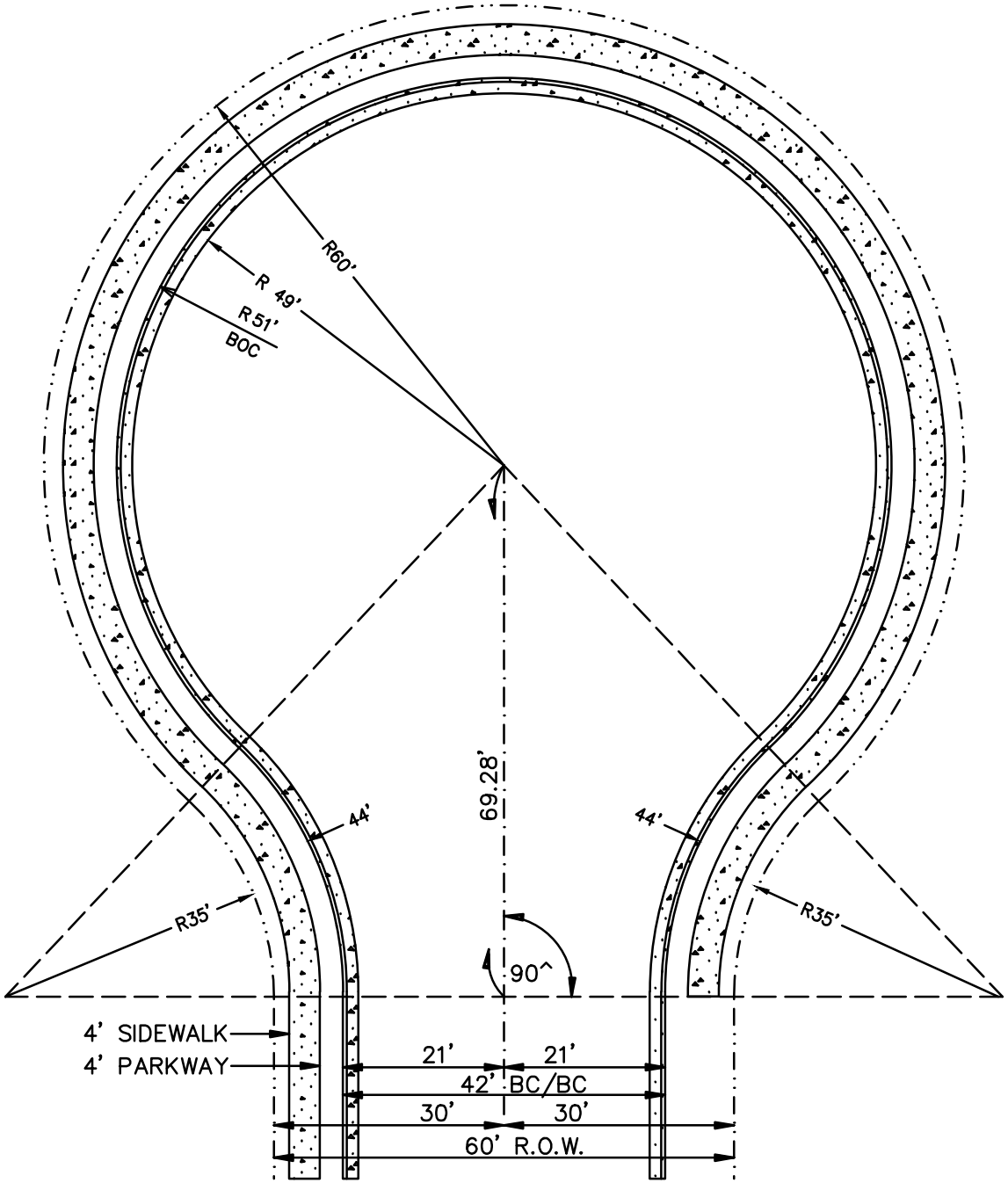

COP STANDARD DETAIL	CUL-DE-SAC FOR 60' R.O.W. STREET	CITY ENGINEER	REVISED: 05/15	DETAIL No. 620P-2

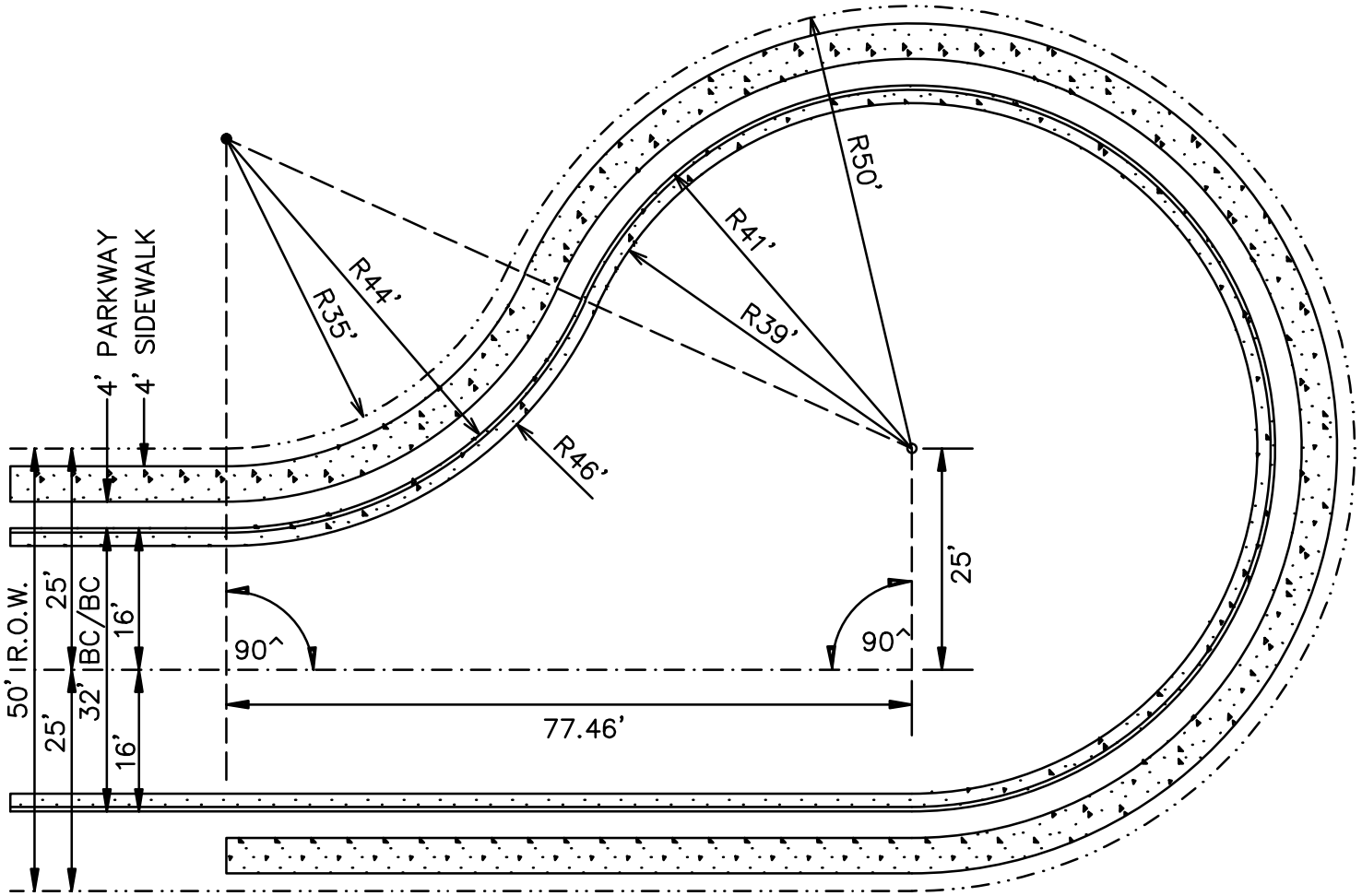

NOTE:
ADD 1' TO BACK OF CURB DIMENSION WHERE 6" ROLL CURB IS USED.

COP STANDARD DETAIL	OFFSET CUL-DE-SAC FOR 50' R.O.W. STREET	CITY ENGINEER	REVISED: 05/15	DETAIL No. 621P-1

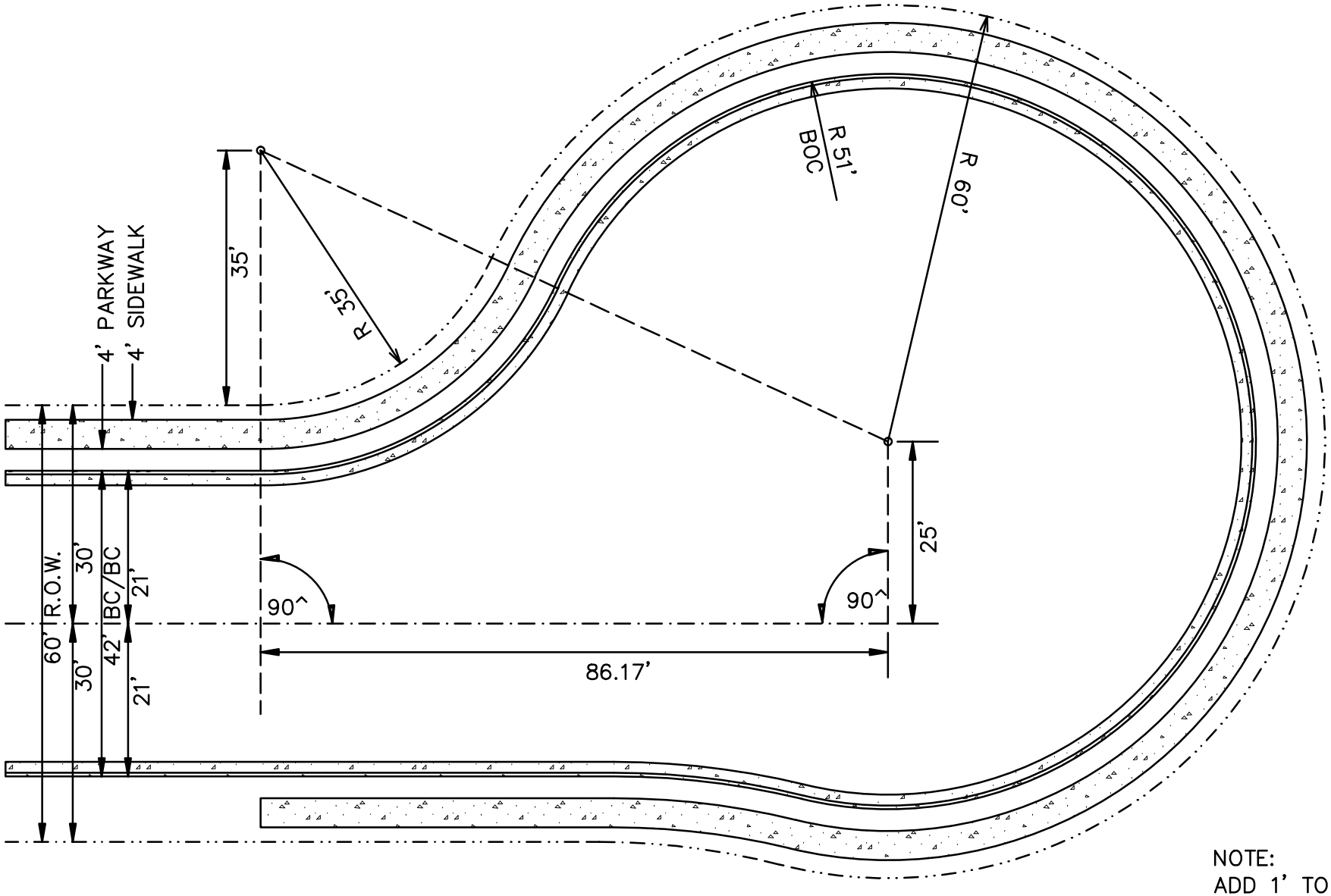

NOTE:
ADD 1' TO BACK OF CURB DIMENSION WHERE 6" ROLL CURB IS USED.

COP STANDARD DETAIL	OFFSET CUL-DE-SAC FOR 60' R.O.W. STREET	CITY ENGINEER	REVISED: 05/15	DETAIL No. 621P-2

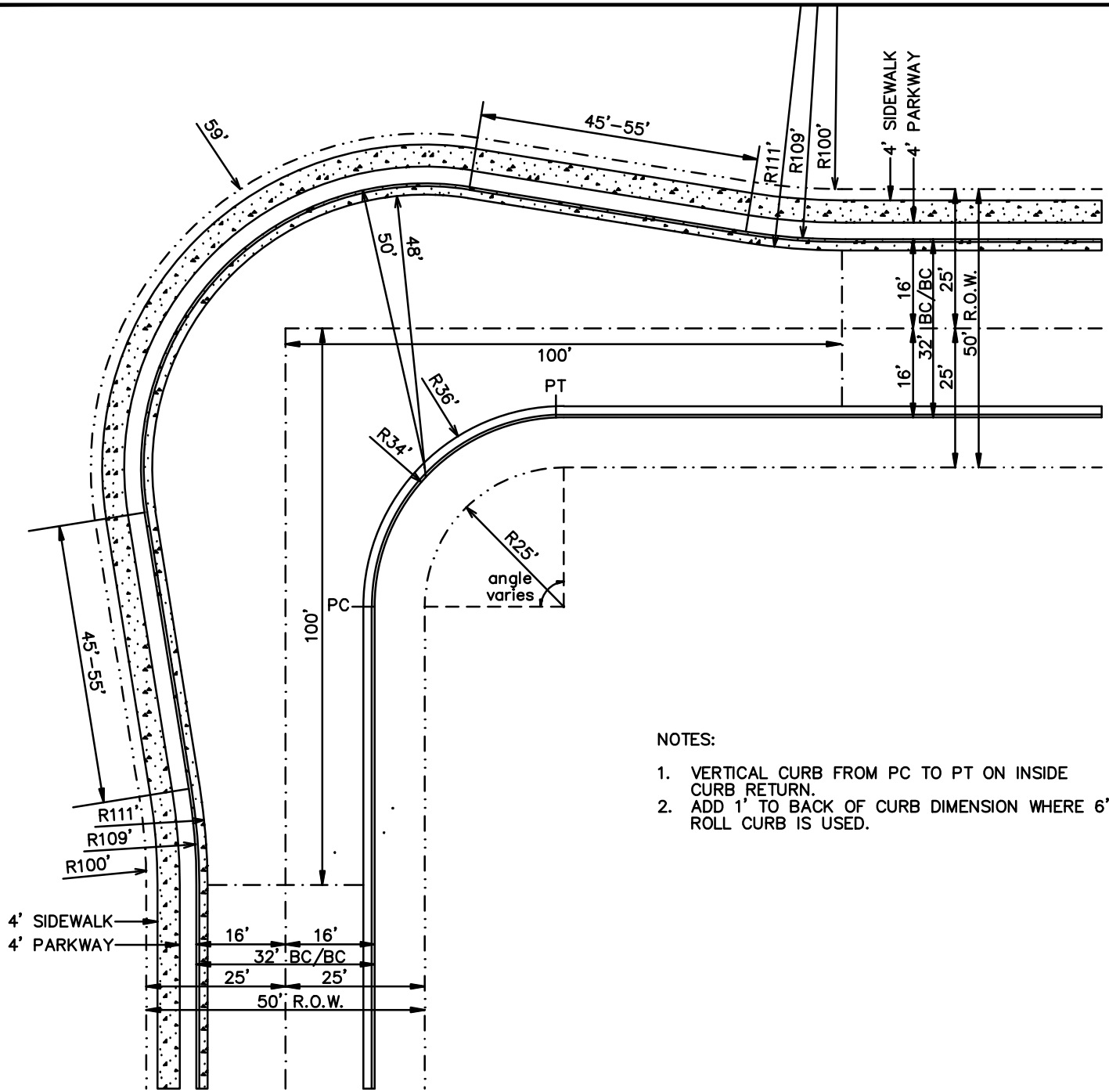

NOTES:

1. VERTICAL CURB FROM PC TO PT ON INSIDE CURB RETURN.
2. ADD 1' TO BACK OF CURB DIMENSION WHERE 6" ROLL CURB IS USED.

COP STANDARD DETAIL	KNUCKLE FOR 50' R.O.W.	CITY ENGINEER	REVISED: 05/15	DETAIL No. 622P-1

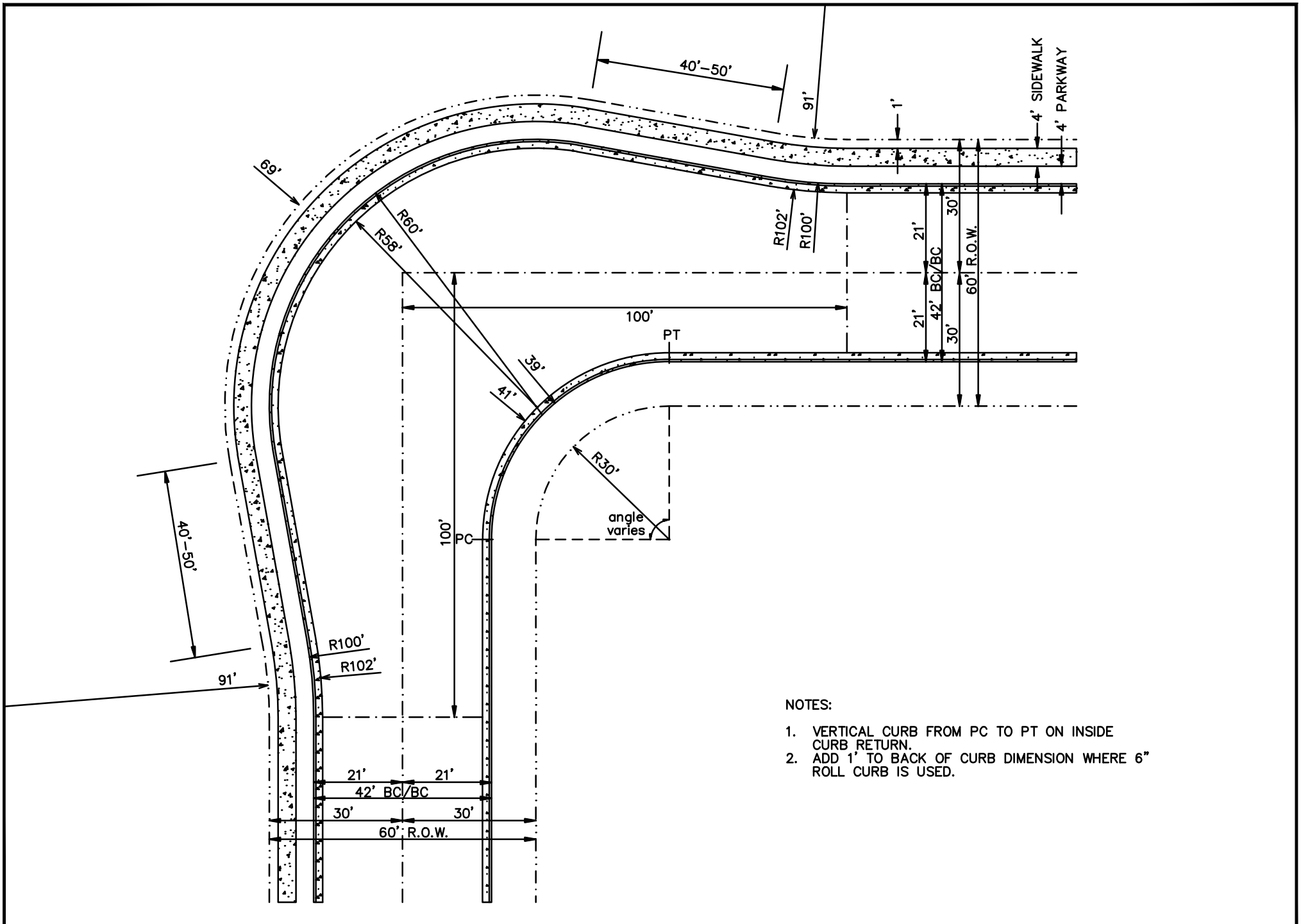

NOTES:

1. VERTICAL CURB FROM PC TO PT ON INSIDE CURB RETURN.
2. ADD 1' TO BACK OF CURB DIMENSION WHERE 6" ROLL CURB IS USED.

COP STANDARD DETAIL	KNUCKLE FOR 60' R.O.W.	CITY ENGINEER	REVISED: 05/15	DETAIL No. 622P-2

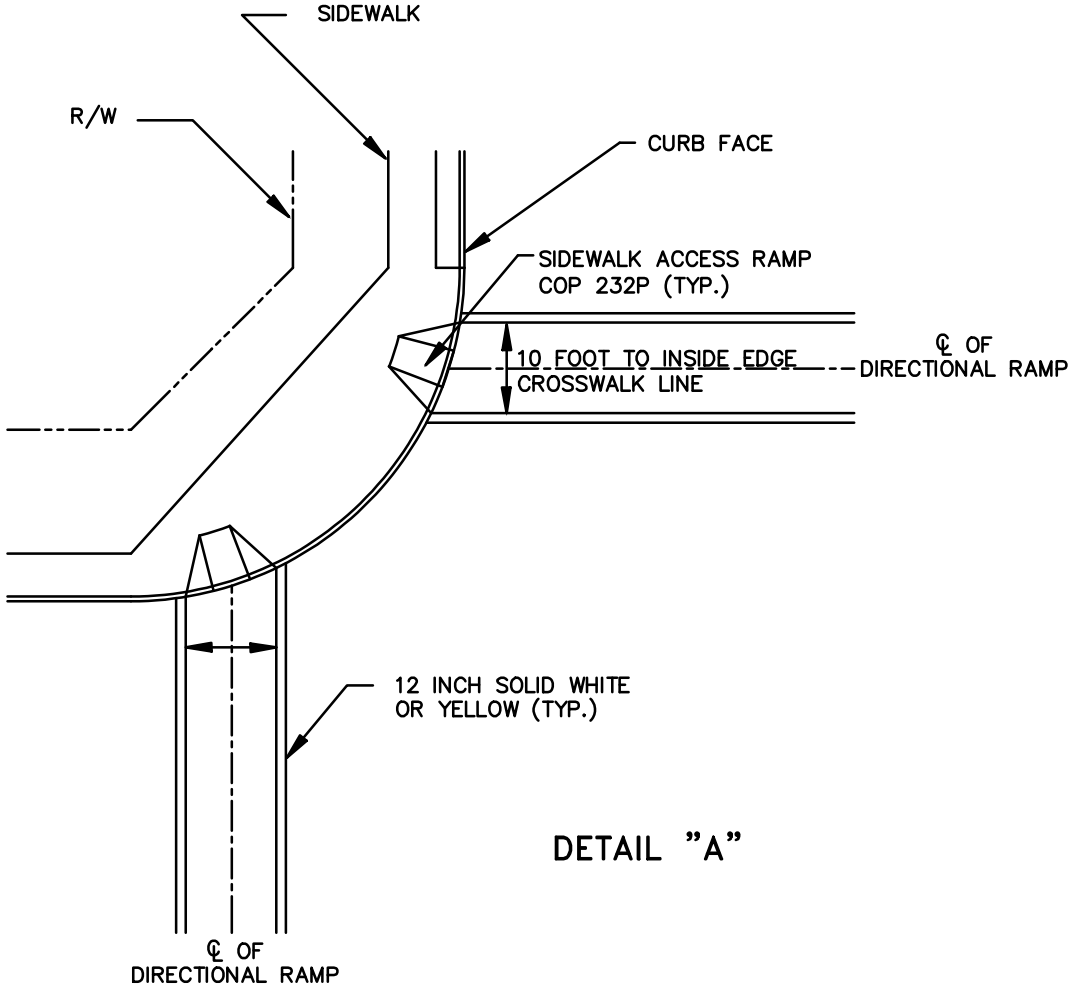

DETAIL "A"

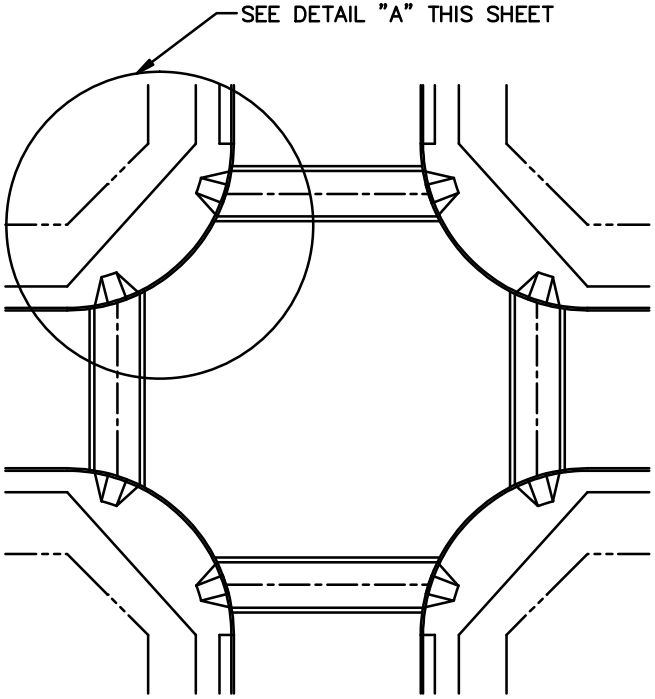

COP STANDARD DETAIL	PAINTED CROSSWALK AT INTERSECTION	CITY ENGINEER	REVISED: 05/15	DETAIL No. 630P

NOTE: ALL LANE LINES TO TERMINATE AT STOP BAR

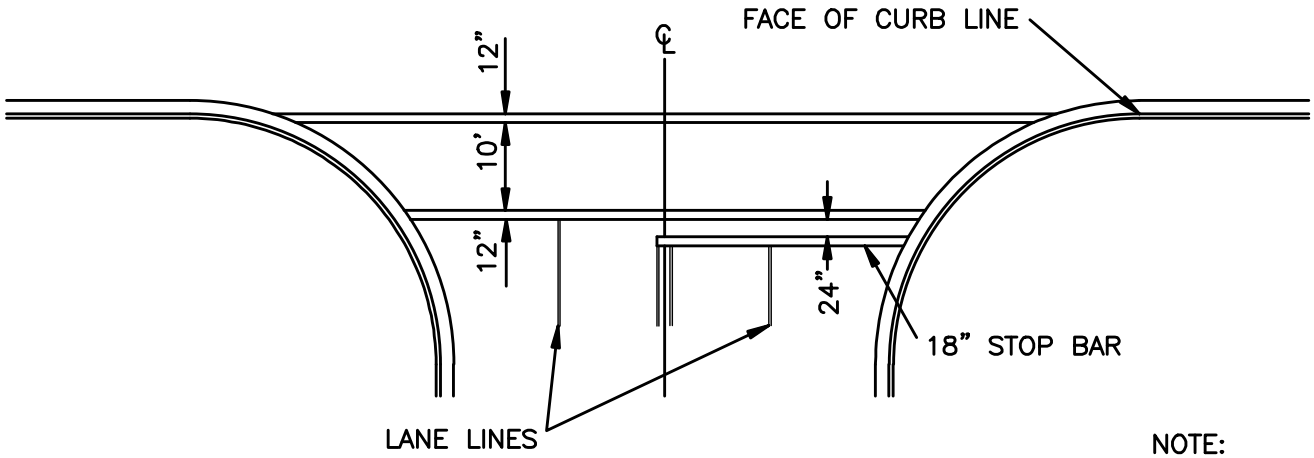

STANDARD CROSSWALK MARKING

WIDTH OF LINES 12" STANDARD
WIDTH OF WALK 10' STANDARD

NOTE:
CROSSWALKS AND STOP BAR MARKINGS SHALL BE 90 MIL (0.090 INCH) THICK ALKYD EXTRUDED THERMOPLASTIC.

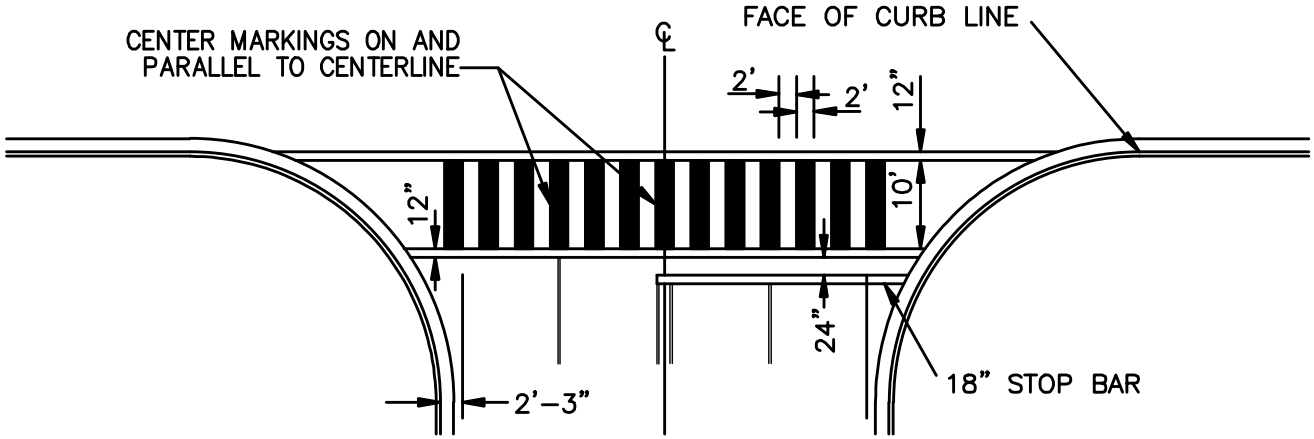

24" BLOCK (LONGITUDINAL)

USE ONLY WHERE SPECIFIED

QUAD CITY STANDARD DETAIL	STANDARD CROSSWALK MARKINGS	REVISED: 3/16	DETAIL No. 631Q

TABLE 'A'
'L' VALUES (FT.)

MPH	DOWNGRADES			
	0%	3%	6%	9%
25 OR NOT POSTED	250	260	270	290
30	305	315	335	355
35	360	380	400	430

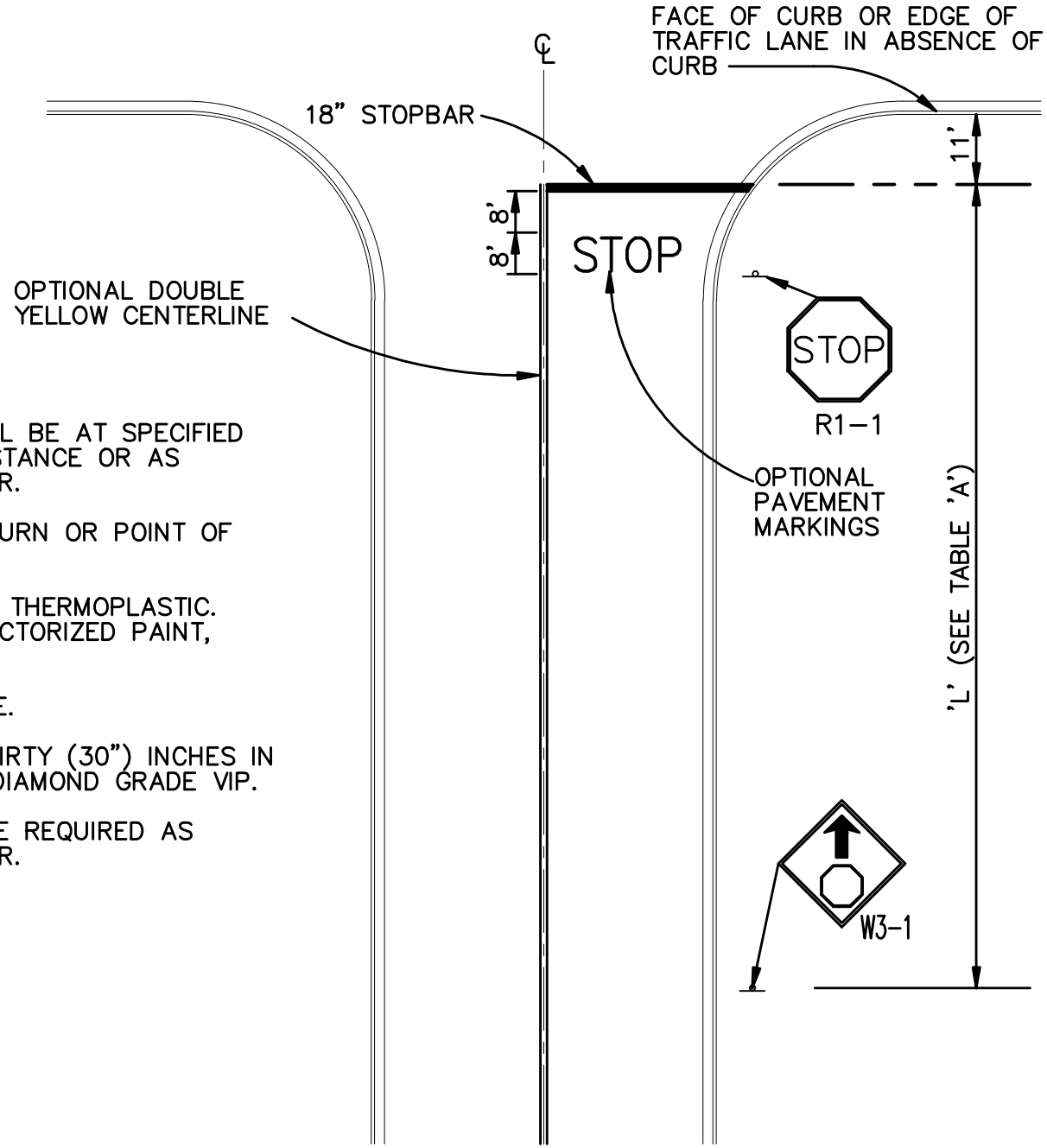

NOTES:

1. THE USE OF W3-1 'STOP AHEAD' SIGNS SHALL BE AT SPECIFIED LOCATIONS DEMONSTRATING LIMITED SIGHT DISTANCE OR AS DIRECTED BY THE AGENCY'S TRAFFIC ENGINEER.
2. STOP SIGN NORMALLY LOCATED AT CURB RETURN OR POINT OF OPTIMUM VISIBILITY.
3. STOP BARS SHALL BE REFLECTORIZED 90 MIL THERMOPLASTIC. DOUBLE YELLOW CENTERLINE SHALL BE REFLECTORIZED PAINT, 24-28 MIL.
4. CENTER PAVEMENT MARKINGS IN TRAVEL LANE.
5. R1-1 STOP SIGN SHALL BE A MINIMUM OF THIRTY (30") INCHES IN WIDTH. ALL SIGN SHEETING MATERIAL TO BE DIAMOND GRADE VIP.
6. OPTIONAL "STOP" PAVEMENT MARKING MAY BE REQUIRED AS DIRECTED BY THE AGENCY'S TRAFFIC ENGINEER.

QUAD CITY STANDARD DETAIL	STOP MARKINGS	REVISED: 3/16	DETAIL No. 632Q

TURN LANE ARROWS

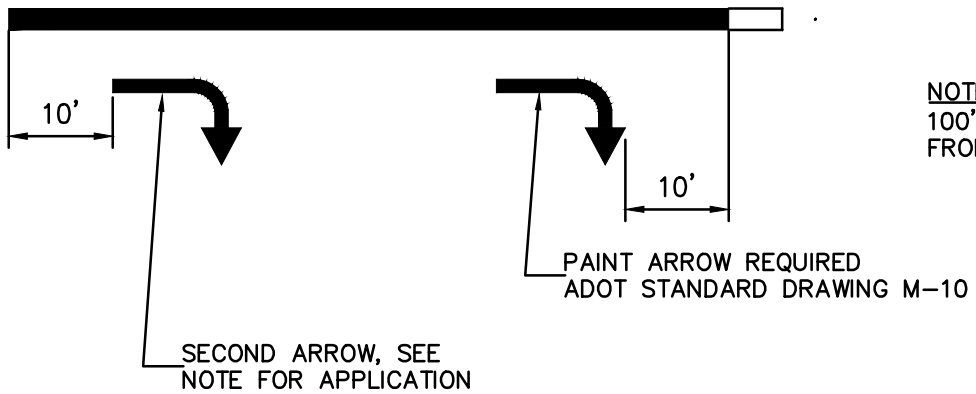

NOTE: IF TURN LANE EXCEEDS 100', ADD SECOND ARROW 10' FROM BACK END OF LANE LANE.

BIKE LANE MARKINGS

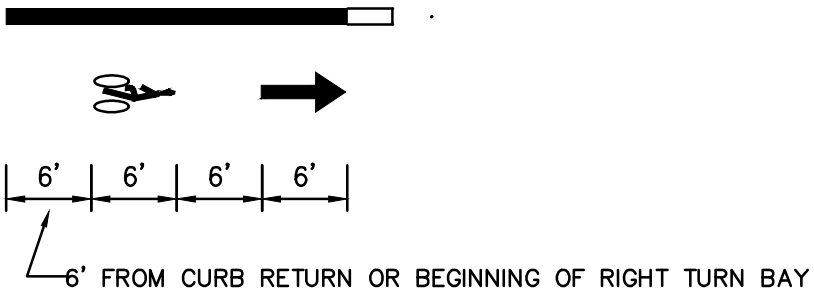

NOTE: ALL TURN LANE ARROWS AND BIKE SYMBOLS SHALL CONFORM TO ADOT SPECIFICATION 704 AND SHALL BE 90 MIL (0.090 INCH) THICK ALKYD EXTRUDED THERMOPLASTIC.

COP STANDARD DETAIL	PAVEMENT MARKINGS	CITY ENGINEER	REVISED: 05/15	DETAIL No. 634P

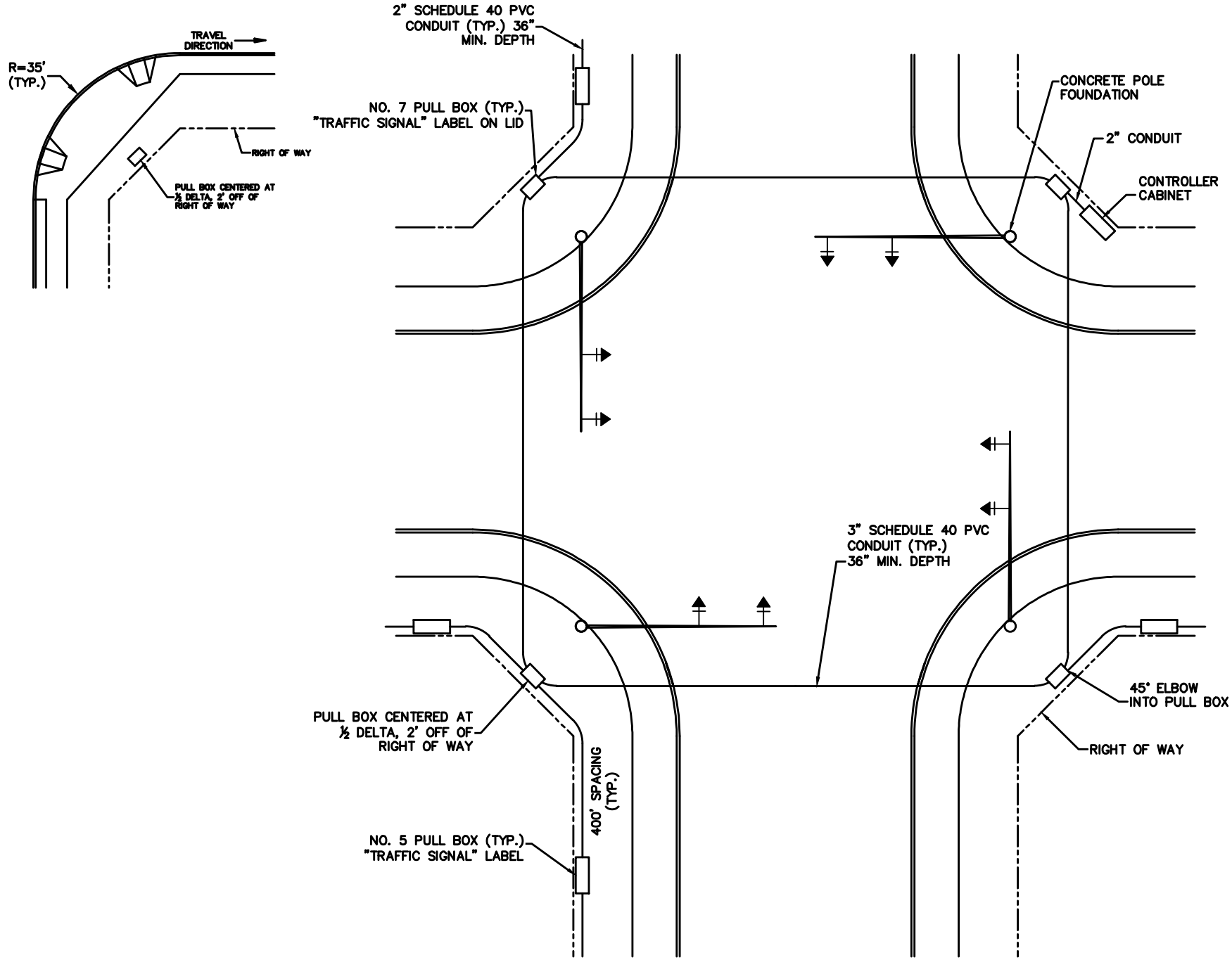

QUAD CITY STANDARD DETAIL	TRAFFIC SIGNAL INTERCONNECT CONDUIT INSTALLATION	REVISED: 3/16	DETAIL No. 640Q

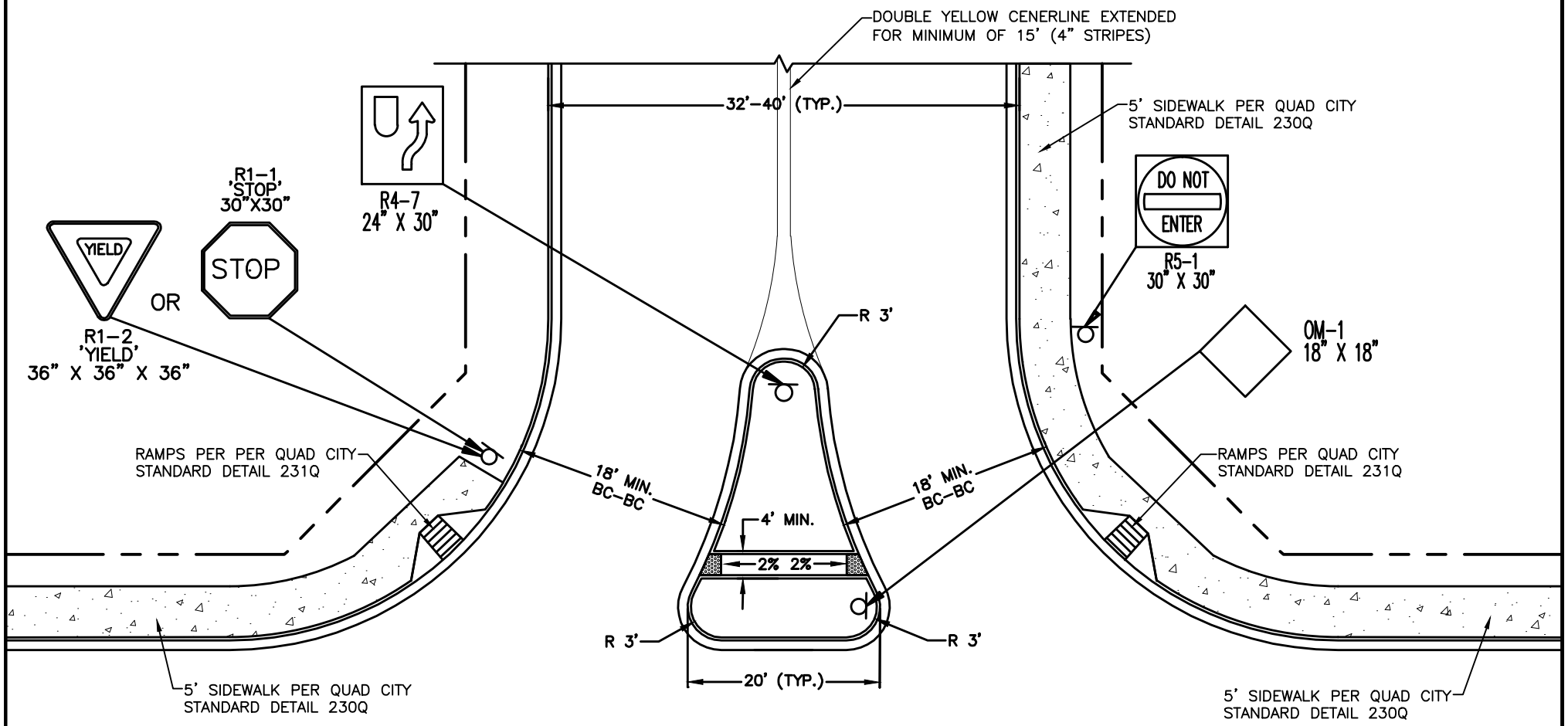

NOTES:

1. CONCRETE ISLAND SHALL BE TYPE 'A' CONCRETE.
2. TURNING LANES NOT SHOWN.
3. LANE WIDTH SHOWN FOR PASSENGER VEHICLE ACCESS.
4. CONCRETE ISLANDS SHALL INCLUDE ADA COMPLIANT PEDESTRIAN ACCESS WITH TRUNCATED DOMES.
5. IF SIDEWALK CONTINUES ONTO SITE, THEN QUAD CITY STANDARD 231Q SIDEWALK RAMP SHALL BE USED.

QUAD CITY STANDARD DETAIL	RESIDENTIAL RIGHT IN/RIGHT OUT PASSENGER VEHICLES ONLY	REVISED: 3/16	DETAIL No. 650Q-1

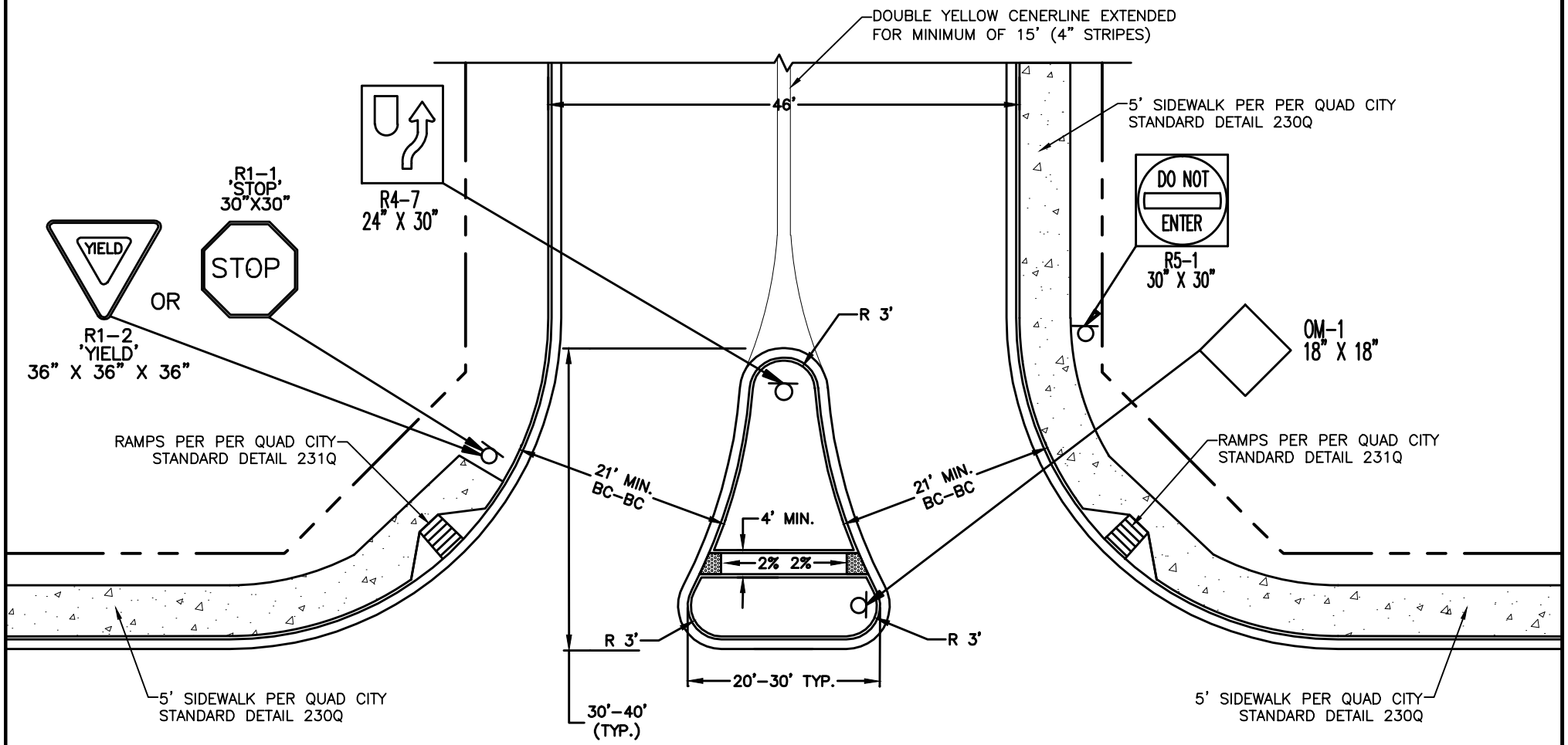

NOTES:

1. CONCRETE ISLAND SHALL BE TYPE 'A' CONCRETE.
2. TURNING LANES NOT SHOWN.
3. LANE WIDTH SHOWN FOR TRUCK ACCESS.
4. CONCRETE ISLANDS SHALL INCLUDE ADA COMPLIANT PEDESTRIAN ACCESS WITH TRUNCATED DOMES.
5. IF SIDEWALK CONTINUES ONTO SITE, THEN QUAD CITY STANDARD 231Q SIDEWALK RAMP SHALL BE USED.

QUAD CITY STANDARD DETAIL	COMMERCIAL RIGHT IN/RIGHT OUT TRUCK ACCESS	REVISED: 3/16	DETAIL No. 650Q-2