CITY OF PRESCOTT

FINAL PLAT SUBMITTAL CHECKLIST

IN ORDER TO SUBMIT THIS APPLICATION YOU MUST SCHEDULE A MEETING WITH A CITY PLANNER. TO SCHEDULE A MEETING PLEASE CALL 928-777-1207.

FP #: _____ Subdivision Name:_____

Assessor's Parcel Number(s): _____

No application will be accepted unless it is complete including, but not limited to, the following:

- ❑ Three (3) copies (Minimum size 24" X 36") of the approved Preliminary Plat
  SP# or PP#:_____
- ❑ Application stating the request and the proposed development, the Assessor's Parcel number, application signed and dated, indicating whether the applicant is the owner or the agent. If agent, include the name and address of the property owner, phone number, and a letter of authorization. (Refer to Page 2)
- ❑ Ten (10) **FOLDED** copies of the final plat. (Minimum size 24" X 36") including all information specified in the *Land Development Code*, Article 9.10.9.B. and listed as a requirement of the Preliminary Plat approval. (Refer to ***"Final Plat Submittal Requirements"*** pages 5 and 6)
- ❑ One (1) 8 ½" X 11" xerographic reduction or photo reduction of the final plat.
- ❑ **An electronic file of the Final Plat in a .pdf format**.
- ❑ Civil Plans drawn by a licensed Arizona Civil Engineer and accompanying documents. (Refer to "***Civil Plan Checklist"*** pages 3 and 4)
  - ❑ ADEQ Forms completed and signed.
- ❑ Archeological study (if applicable)
- ❑ Certificate of Assured Water Supply or approved Water Service Agreement
- ❑ One (1) original and one (1) copy of any deed restrictions to be imposed upon the plat.

- ❑ A filing fee in the amount of: **$ 1122.00 (first 20 lots)**
  $ 53.00 (each lot over 20)

NOTE: SUBMITTAL OF AN APPLICATION DOES NOT GUARANTEE THE ITEM WILL BE SCHEDULED FOR THE NEXT AVAILABLE PUBLIC MEETING. A DETERMINATION OF "APPLICATION COMPLETENESS" BY THE STAFF PLANNER IS REQUIRED BEFORE ANY ITEM WILL BE SCHEDULED FOR PUBLIC HEARING.

(Office Use Only)

_____ _____

PLANNER TAKING IN APPLICATION **DATE TAKEN IN**

CITY OF PRESCOTT
COMMUNITY DEVELOPMENT DEPARTMENT
PLANNING DIVISION
201 S. Cortez, Prescott, AZ 86301 (928) 777-1356

FINAL PLAT - HEARING APPLICATION

FP#_____
Subdivision Plat Name: _____

Current Assessor's Parcel Number (s)(APN):_____

Township_____ Section_____ Range_____ Zoning:_____

	For Staff Use Only
Owner Name & Address: _____ _____ _____ **Phone:**_____ **Fax:**_____ **Email:**_____	Date Received:_____ Taken In By:_____ Assigned To:_____ Date Application Complete:_____
Applicant/Agent Name & Address (If different than property owner, **Agent letter must accompany submittal):** _____ _____ _____ **Phone:**_____ **Fax:**_____ **Email:**_____	Fees & Charges: _____ Receipt #/Date:_____ P&Z WS Date:_____ P&Z Vote Date:_____ Council WS Date:_____ Council Mtg Date:_____

Request For Final Plat Approval: Phase #: _____ (if applicable)

Location of Property: _____

Total Acres:_____ Total Lots:_____

Min. Lot Size:_____ Max. Lot Size:_____ Average Lot Size: _____

Existing Zoning:_____ Proposed Zoning:_____

Is mass grading proposed: _____

Is project in a Reimbursement District:_____ If yes, what type:_____

<u>If a Planned Area Development:</u>

Total % Area of Open Space:_____ Total Open Space Area:_(acres)_____

Total Number of Dwelling Units:_____

_____	_____	_____
Name	**Signature**	**Date**

CITY OF PRESCOTT
Everybody's Hometown

CITY OF PRESCOTT
ENGINEERING SERVICES DEPARTMENT
433 N VIRGINIA ST, PRESCOTT, AZ 86302
(928) 777-1130 (F) 928-771-5929

CIVIL PLAN SUBMITTAL CHECKLIST

THIS FORM MUST BE SUBMITTED WITH FIRST PLAN CHECK (Submit All Applicable Items)

Project Name: _____

Applicant/Owner Name: _____

Description of Work:_____

Engineer's Estimate of TOTAL Cost:_____Square Feet of Pavement (if applicable):_____

Linear Feet of Water Line (if applicable):_____ Engineer's Estimate of Water Improvement Costs:_____
Linear Feet of Sewer Line (if applicable):_____ Engineer's Estimate of Sewer Improvement Costs:_____

I certify that these plans include all items I have checked on this checklist, and were prepared per the development standards cited below. I understand that the plans may not be accepted if I have failed to provide this information.

_____ _____ _____
Signature (of preparer of plans) **Registration number (if applicable)** **Date**

Submitted	# of Sets	
		Plans must be prepared in conformance with the "Improvement Plan Check Policies and Guidelines". (The latest edition of the "Guidelines" may be obtained from the City Engineering Services Department or downloaded from the City website @ www.cityofprescott.net).
☐	3 Sets	Street and Drainage Plans
☐	1 Set	Street cross-sections at 50' intervals, or as required by The City of Prescott, to accompany Street Improvement Plan for existing road tie-ins.
☐	3 Sets	Water and Sewer Plans
☐	3 Sets	Water and Sewer Reports
☐	1 Set	Street Light Plan (where applicable).
☐	1 Set	24"x36" Landscaping Plans (if required by conditions) and/or a slope stabilization plan composite sheet for smaller projects
☐	1 Set	Signing and striping (S/S) following MUTCD & *Land Development Code* (*LDC)* requirements
☐	1 Set	Signal Plan (where applicable).
☐	2 Sets	Drainage Report with Hydraulic Calculations, and Hydrological Maps
☐	2 Sets	Geotechnical Report including R-Value; and evaluation of the existing pavement and structural section for roads to be widened, or reconstructed *(existing conditions require 1 set of cross sections)
☐		ADEQ NOI Form, ADEQ Agreement to Serve Water form, ADEQ Capacity Assurance form for wastewater collection and treatment
☐		City of Prescott Garbage Service Agreement
☐	**4 Sets**	**A separate (stand-alone) Rough Grading Plan and Erosion Control Plan/SWPPP shall be submitted if a rough grading permit is being requested prior to the plan being approved. 100% financial assurances are required to be posted for slope stabilization, prior to issuance of a grading permit. No grading permit shall be issued without approval from the Planning Division of Community Dev.**

NOTE:

1. Each approved unit of a phased subdivision shall be submitted on a separate and complete set of plans, and be fully functional on a stand-alone basis. No combining of improvement plans of units is allowed, except for drainage and grading plans, which shall be combined for all the units.
2. All storm drains, including catch basins, laterals and all facilities to be maintained by the City, shall be identified on the plans. Street and storm drain sheets and construction notes shall be numbered consecutively and consistently from sheet to sheet. If a standard callout list is used, those items not used shall be crossed out or the description deleted and "Not Used" submitted in its place. Quantities shall be included on sheet one or two and on construction cost worksheet.
3. Each phase of phased subdivisions shall be platted and recorded separately.

CIVIL IMPROVEMENT PLAN - RESUBMITTALS

When resubmitting plans for review, please submit two (2) sets of revised plans, along with the previously reviewed redlined plans and an updated Construction Cost Worksheet, to the Community Development Department at 201 S. Cortez Street, Prescott, AZ 86303.

If a subsequent round submittal contains issues that need to be discussed with City Staff before being addressed by the Applicant, the City or the Applicant may call a meeting of the Technical Review Committee, which may involve the City Engineer, Utilities Engineer, Fire and Planning Department to resolve the issues prior to continuing the plan review process. To schedule a meeting of the Technical Review Committee, please call Gwen Rowitsch, Private Development Facilitator at (928)777-1368.

FINAL PLAT SUBMITTAL REQUIREMENTS
Land Development Code, Article 9.10.9.B. (*LDC*)

The Final Plat shall substantially conform to the Preliminary Plat as approved by the City Council, incorporating all changes, modifications, corrections, and conditions imposed by the Planning and Zoning Commission and City Council; and provide further, that it conforms to all applicable requirements of the *LDC*. For large subdivisions, the Final Plat may be submitted for approval progressively in units, within which there may be a number of distinct construction phases, satisfactory to the City Council. The Final Plat shall be drawn in accordance with the Arizona Boundary Survey Minimum Standards (http://www.btr.state.az.us/regulations/arizona_boundary_survey.asp), City of Prescott Layer and Survey Datum Requirements, and shall show or be accompanied by the following:

1. **Adjacent Land.** References to recorded subdivision plats or adjoining platted land by record name shall be placed on the Final Plat.

2. **Boundary Lines and Bearings.** Tract boundary lines sufficient to locate the exact area proposed for subdivision, right-of-way lines of streets, easements and other rights-of-way, and property lines of residential lots and other sites; with accurate dimensions, bearings or deflection angles, and radii, arcs and central angles of all curves shall be placed on the Final Plat. All dimensions and bearings shall be balanced and fully closed.

3. **Building Lines.** Minimum building setback lines when required or approved by the City Council shall be place on the Final Plat.

4. **Construction Plans.** Three (3) sets of construction plans for required improvements 24" x 36" in size, along with all data and calculations related to utilities, drainage or other construction in the subdivision, as necessary to demonstrate compliance with the requirements of *LDC* Sec. 7.4.2, Engineering and Construction Standards, shall be submitted with the Final Plat. Such plans shall also show all existing or proposed surface and subsurface improvements and obstructions and shall be reviewed and approved by the City Engineer and City Utility Engineer prior to scheduling a Final Plat for approval by the City Council.

5. **Control Points, Acres.** The primary control points, or descriptions of such control points, to which all dimensions, angles, bearings, and similar data on the plat shall be referenced, shall be placed on the Final Plat. The area of the subdivision, in acres, shall be shown.

6. **Declaration of Units and Phasing.** The labeled units and requested construction phasing shall be noted on the Final Plat.

7. **Deed Restrictions.** One original and one copy of any deed restrictions to be imposed upon the plat, or any part or parts thereof, shall be submitted with the Final Plat. Said deed restrictions must be in proper form to be recorded as a separate instrument. Space for cross-referencing the deed restrictions shall be placed on the Final Plat.

8. **Dedications Statement.** The property owners' statement of dedications shall be placed on the Final Plat. The certificate of dedication shall be executed by all persons, firms or corporations owning an interest in the property, subdivided and platted, and shall be acknowledged in the manner prescribed by the laws for the State of Arizona for conveyances of real property. In addition to the above requirements, the statement of dedications shall contain the following:

a) An accurate description of the tract of land subdivided.

b) A statement and express representation that the parties joining in such dedication are the sole owners of such tract of land, with notarized signatures.

c) An express dedication without reservation to the public for public use; the streets, alleys, rights-of-way, school site(s) and any other public areas shown on the attached plat.

d) A dedication for use and maintenance of private streets, recreational facilities, common open space, and drainage easements, private sewer and/or water systems (if applicable), etc., to the homeowners' association, where applicable.

e) A positive reference and identification of the plat of such subdivision, date of plat and engineer.

f) Flood plain/floodways shall be delineated with 100-year flood limits by elevation.

9. **Disturbable Area Envelope Map.** Where sensitive terrain is to be protected on targeted lots, there shall be disturbable area envelopes indicated on the final plat, or alternatively, on a correlated map that is not recorded but referenced on the Final Plat and kept on file at the Community Development Department.

10. **Easements.** Location and dimensions of all easements shall be placed on the Final Plat. Any private easements shall be identified as "Private Easements" and purposes denoted, such as "No Build Easement", "Utility Easement", "Access Easement".

11. **Excepted Parcel(s).** All excepted parcel(s) within the plat boundary, accurately described by bearings and distances, and indicated as "not a part". Proper streets and alley dedications adjacent to any proposed tracts or exempted parcels shall be provided by the sub-divider by inclusion within the plat or by separate dedications noted on the Final Plat.

12. **Format.** The Final Plat and Mylar shall be drawn to a scale of 200 feet to one inch or to another scale as may be specified by the Community Development Director. Each drawing shall measure 24 inches by 36 inches. When necessary, the Final Plat may be on several sheets accompanied by an index sheet showing the entire subdivision.

13. **Legal description.** A legal description and surveyor's or engineer's certificate similar to the one which follows shall be placed on the Final Plat:

KNOW ALL MEN BY THESE PRESENTS:
That I, _____, do hereby certify that I prepared this plat from an actual and accurate survey of the land and that the corner monuments shown thereon were properly placed under my supervision. The subdivision boundary accurately closes, and is designed in conformance with the City's regulations, survey datum, and the approved Preliminary Plat.

_____
Signature

14. **Lot and Block Numbers**. Numbering to identify each lot or site and each block, and the dimensions of lots and blocks, shall be placed on the Final Plat.

15. **Monuments**. Location and description of monuments shall be placed on the Final Plat.

16. **Plat Identification.** A positive reference and identification of the plat and date of plat shall be placed on the Final Plat.

17. **Purpose of Sites.** The purpose for which sites (land use), other than residential lots, are dedicated or reserved shall be indicated on the Final Plat.

18. **Streets**. Name and right-of-way width of each street or other right-of-way shall be placed on the Final Plat.

19. **Streets and Intersections.** The location of the point of intersection and points of tangency of street intersections, and the bearing and distance of each street right-of-way centerline shall be placed on the Final Plat.

20. **Tax Certificates.** Tax certificates indicating that all taxes on the land being subdivided have been paid to the current year shall be submitted with the Final Plat.

21. **Title; Scale.** A title, scale, north point, and date of plat preparation shall be placed on the Final Plat.

22. **Water Supply.** A statement shall be included on the Final Plat that a Certificate of Assured Water Supply in accordance with the requirements of *LDC* Sec. 7.4.8E, has been submitted with the Final Plat, or that the City of Prescott has entered into a Water Service Agreement with the sub-divider to provide an Assured Water Supply.

23. **Yards.** If processed as a Planned Area Development (PAD), the Final Plat shall indicate approved setbacks, drawn either on each lot or as typical(s).

CITY OF PRESCOTT
ENGINEERING SERVICES/PUBLIC WORKS DEPARTMENTS
433 N VIRGINIA ST, PRESCOTT, AZ 86302
(928) 777-1130 (F) 928-771-5929

LAYER AND SURVEY DATUM REQUIREMENTS

When submitting survey datum and layer information for engineering plans that are to be submitted to the City of Prescott, (i.e.: final plat, preliminary plat and revision of plat, improvement plans for subdivision and commercial site improvements, as-built plans, etc.), those plans must meet the following survey datum and layer requirements:

1. Datum will be in international feet for horizontal and vertical, NAVD 88 for vertical and City of Prescott co-ordinates for horizontal. Please refer to **Exhibit A** titled, "City of Prescott Survey Datum Requirements."

2. A survey block or note listing two (2) on-site points conforming to "City of Prescott Survey Datum Requirements" must be provided. These two points must have a Northing, Easting and a NAVD 88 elevation.

3. Centerline monuments should be rebar in a hand-hole at all PC's, PT's and intersections. Right-of-Way monuments should be a rebar in concrete at PC's, PT's and angle points. See **Exhibit B**, "Y.A.G. Standard Detail 120-1P entitled, "Survey Marker."

4. Works will be submitted in their entirety in digital electronic format which is compatible with the City's system as follows: CADD-- .DGN (microstation), .DWG (Auto CADD), .DXF (generic) and must conform to the City's layer and feature requirements listed below:

"CITY OF PRESCOTT LAYER REQUIREMENTS"	
CONTROL LAYERS	**STORM DRAIN LAYER**
CONTROL: GPS ground control	STORMLIN: Storm lines
SECCOR: Section corners	STORMSTR: Storm points or nodes
RGTOFWAY: Right of Ways	EXISTSTORM: Existing storm drain features
PARCELS: Property lines	
WATER LAYERS	**UTILITY LAYERS MISC.**
HYDRANT: Water hydrants	EASEMENT: Easements
WATERSTR: Water points or nodes	EXISTMISC: Existing misc. features
WATERMAIN: Water lines	GAS: Gas lines and features
EXISTWATER: Existing water features	CABLE/TV: Cable, Phone and TV lines
SEWER LAYERS	ELEC: Electric lines and features
SEWERSTR: Sewer points or nodes	**ROAD FEATURES**
SEWERMAIN: Sewer lines	CNTRLIN: Street centerlines
LIFTSTAT: Lift Stations	CURB: Curb and gutter
EXISTSEWER: Existing sewer features	SIDEWALKS: Sidewalks
	EDGEPAVE: Edge of pavement or uncurbed areas
SURROUNDING FEATURES	UNPAVEDROAD: Unpaved roads
BUILDING: Buildings	
FENCES: Fences and walls	

ENGINEERING SERVICES/PUBLIC WORKS DEPARTMENTS
430 N. VIRGINIA ST, PRESCOTT, AZ 86302
(928) 777-1130 (F) 928-771-5929

"EXHIBIT A"

"CITY OF PRESCOTT SURVEY DATUM REQUIREMENTS"			
COORDINATE UNITS:		International Feet	
DISTANCE UNITS:		International Feet	
HEIGHT UNITS:		International Feet	
VERTICAL DATUM:		NAVD 88	
STATE PLANE			
COORDINATE SYSTEM:		US State Plane 1983	
DATUM:		(WGS 84)	
ZONE:		Arizona Central 0202	
GEOID MODEL:		GEOID99 (Conus)	
CITY OF PRESCOTT – CONVERSION FROM STATE PLANE			
NORTHING:		(State Plane x 1.000329975) – 701,456.0090	
EASTING:		(State Plane x 1.000329975) + 69,457.2499	
STATE PLANE – CONVERSION FROM CITY OF PRESCOTT			
NORTHING:		(City of Prescott + 701,456.0090) x 0.999670134	
EASTING:		(City of Prescott – 69,457.2499) x 0.999670134	
EXAMPLE CITY OF PRESCOTT MINGO BASE			
LATITUDE	34°	34'	29.27969" N
LONGITUDE	112°	28'	48.72638" W
HEIGHT	5582.412'		

STATE PLANE	COORDINATES	CITY OF PRESCOTT GRID
NORTHING	1,301,026.703	600,000.0000
EASTING	530,367.742	600,000.0000
ELEVATION	5,673.955'	5,673.955'
Control provided by the City of Prescott will be in the City of Prescott Coordinate System.		

INTERNATIONAL FEE & U.S. FEET CONVERSIONS	
U.S. Feet to International Feet	U.S. Feet x 1.00000200
International Feet to U.S. Feet	International Feet x 0.99999800

1. When converting elevations, the difference is negligible; 0.011, for example: 5673.955 International Feet = 5673.944 U.S. Feet.

2. When converting State Plane, the difference is unacceptable:
   Northing: 1,301,026.703 International Feet = 1,301,024.101 U.S. Feet
   Easting: 530,367.742 International Feet = 530,366.681 U.S. Feet
   The difference in coordinates is 2.602 feet in the Northings and 1.061 feet in the Eastings which is a locational difference of 2.810 feet.

Y.A.G. Standard Detail
120-1P/ Survey Marker

"EXHIBIT B"

NOTES:

1. TYPE 'A' TO BE USED AT INTERSECTIONS OF MAJOR STREETS & COLLECTOR STREETS, AND AT OTHER SPECIAL POINTS IF REQUIRED BY ENGINEER, AS SHOWN ON PLANS.
2. TYPE 'A' TO BE USED AT INTERSECTION OF STREET CENTERLINES, CORNERS OR CHANGES IN ALIGNMENT OF SUBDIVISION BOUNDARIES (WHEN THEY FALL IN PAVEMENT), P.C.'S AND P.T.'S OF CURVES.
3. *TYPE 'C' TO BE USED AT PC, PT, AND PI POINTS ON RIGHT-OF-WAY AND SUBDIVISION BOUNDARIES WHERE SUCH POINTS FALL OUTSIDE OF PAVED AREAS ONLY.*
4. FRAME & COVER TO INCLUDE CHAIN PER DET. 270. (OPTIONAL PER AGENCY REQUIREMENTS.)

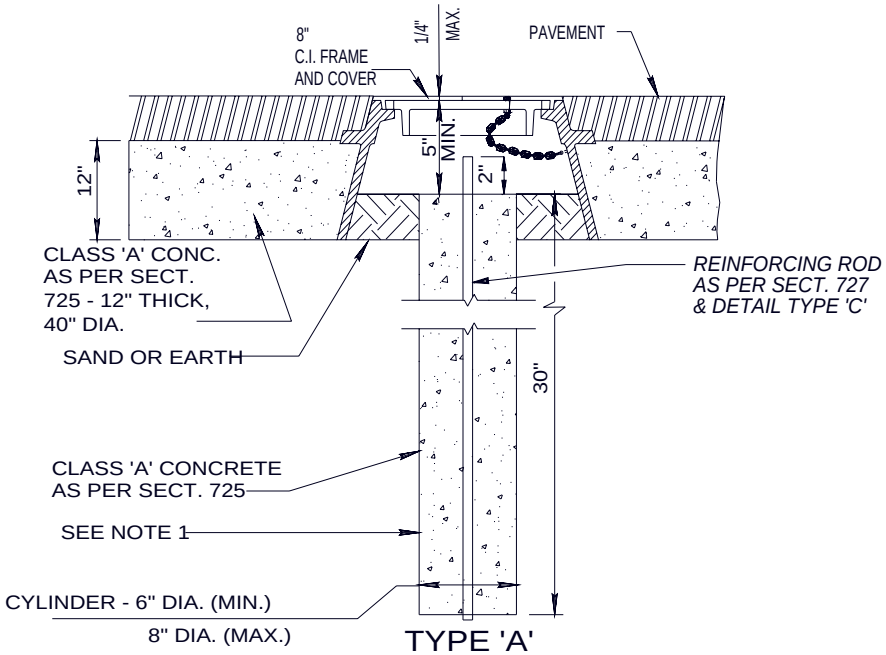

TYPE 'A'
(WITH FRAME PER DETAIL 270)

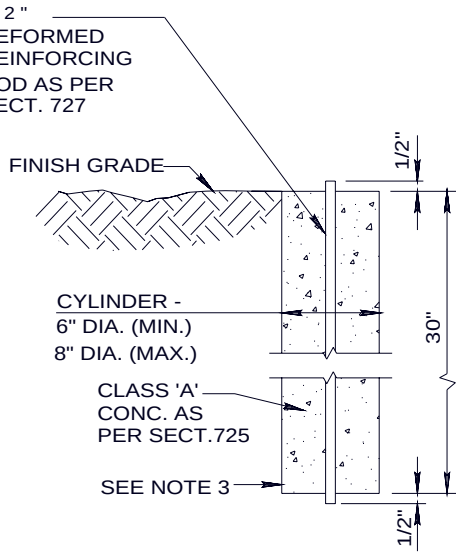

TYPE 'C'
OUTSIDE PAVED AREAS ONLY

revised 08/05

DETAIL NO.			DETAIL NO.
120-1P	YAG STANDARD DETAIL	SURVEY MARKER	120-1P

FINAL PLAT PROCESSING PROCEDURES

The Final Plat and related construction civil plans shall be submitted to the Community Development Department for concurrent review. The Final Plat shall be considered officially filed only after it is examined and found to be in compliance with the general provisions of these regulations by the Community Development Director. The Final Plat will not be considered unless a Preliminary Plat has first been approved or a waiver has been granted by City Council.

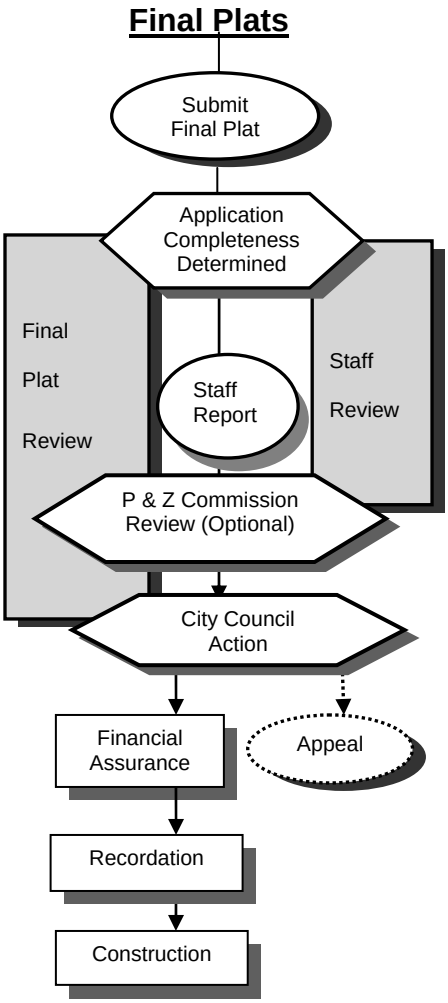

The Community Development Director shall review the Final Plat application for compliance with the provisions of the Land Development Code (*LDC*), the conditions or modifications required by Preliminary Plat approval, and shall then prepare a summary report. Scheduling the report and review by the Planning and Zoning Commission or the City Council shall occur only after the full multi-department Compliance Review is complete.

Review by Planning and Zoning Commission (Optional)

The Director may elect to refer a Final Plat to the Planning and Zoning Commission for recommendation where there are concerns regarding consistency of a Final Plat with the approved Preliminary Plat or other relevant matters.

City Council Action

The City Council shall review the application (Refer to *LDC* Sec. 9.19.1B) in a public meeting and vote to approve, approve with conditions, or deny the plat application.

Waivers

The City Council may approve, approve with conditions, or disapprove waivers of the standards in *LDC* Sec. 7.4, Subdivision Design Standards, or to the procedural requirements of *LDC* Sec. 9.10, Subdivision and Land Split Review, when it is demonstrated to be appropriate for a project's viability, to not to detract from the public good, and to be consistent with *LDC* Sec. 1.5, Purpose and Intent, of these regulations.

Appeals of Subdivision Plat

An appeal from any final decision regarding a final subdivision plat or a plat amendment shall be filed with a court of competent jurisdiction within 30 days of the decision. If no appeal is filed in writing within 30 calendar days from the date of final City action, the decision shall be considered final.

AFTER APPROVAL AND PRIOR TO RECORDATION OF THE FINAL PLAT

Financial Assurances

The sub-divider shall file financial assurances as required by *LDC* Sec. 7.6.1, in which case the guarantee of performance shall be filed with the City Clerk. The Construction Documents must be duly signed by both the City Engineering and City Utility Engineer before proceeding with grading, drainage or the construction of streets and utilities. The City will inspect the construction work as it progresses and will make the final inspection to assure compliance with City requirements. The Design Engineer shall also make sufficient inspections to certify that the subdivision is constructed per approved plans.

Recordation of Final Plat

The following must occur prior to the final plat being recorded:

1. Favorable action has been taken by the City Council.
2. The applicant has submitted all materials outlined in the ***"Mylar Submittal Guidelines"***.
3. Recording fees have been paid as follows: $28.00 first page, $20.00 each additional page (check made out to the Yavapai County Recorder's Office)

When the Final Plat has been recorded in the Yavapai County Recorder's Office and the Construction Documents have been duly signed by both the City Engineering Department/Civil Engineer and the City Public Works Department/Utilities Engineer, the applicant is then authorized to proceed with the construction of the required improvements. Nothing in the procedure authorizes construction other than as specifically detailed on the approved construction plans.

Completion of Construction Improvements

Prior to the subdivision receiving an Approval to Operate (ATO) and the financial assurances being released for the project from the City, the applicant must submit all materials outlined in the ***"Approval to Operate Submittal Guidelines"*** to the Engineering Services Department.

The City shall begin the two-year warranty period after the ***"Approval to Operate"*** has been issued by the Engineering Services Director. Financial Assurances shall only be released in Accordance with the *Land Development Code*, Section 7.6.2.

ADEQ FORMS/LINKS

"Capacity Assurance for Sewage Collection"
www.azdeq.gov/environ/water/permits/download/capas.pdf

"Sewage Treatment Facility Capacity Assurance"
www.azdeq.gov/environ/water/permits/download/stfcap.pdf

"Approval of Sanitary Facilities for Subdivisions"
www.azdeq.gov/environ/water/permits/download/subd-app.pdf

"Notice of Intent"
www.azdeq.gov/environ/water/permits/download/constnoi.pdf

"Drinking Water Service Agreement"
www.azdeq.gov/function/forms/appswater.html