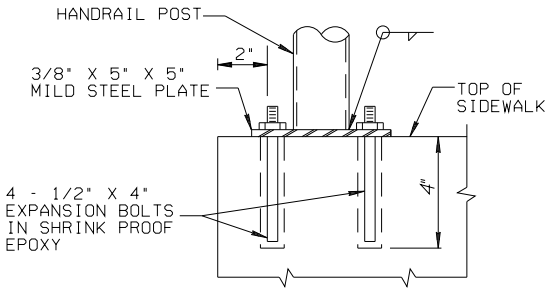

EXPANSION BOLT DETAIL
AT BACK OF SIDEWALK
NO SCALE

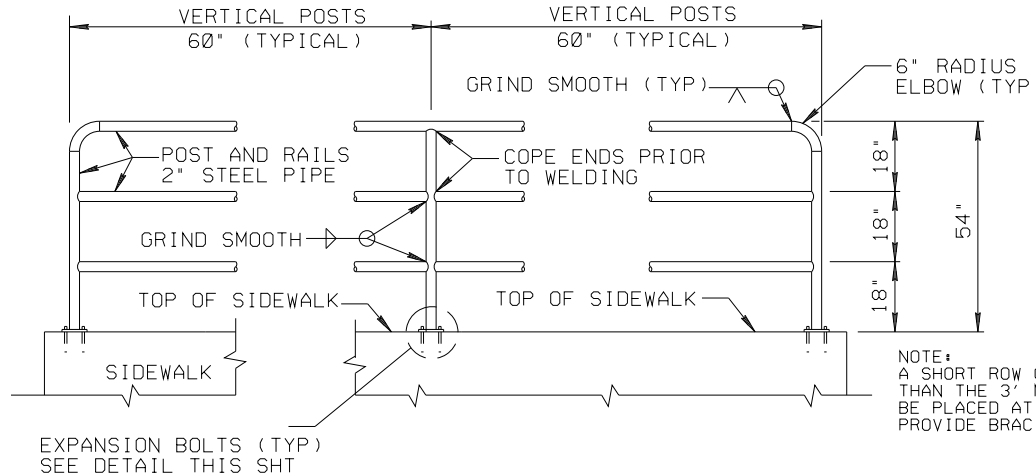

NOTE:
A SHORT ROW OF RAIL LESS THAN THE 3' MIN. LENGTH CAN BE PLACED AT 90° TO RAIL TO PROVIDE BRACING WHEN NEEDED.

HANDRAIL DETAIL/TOP OF SIDEWALK OR WALL
NOT TO SCALE

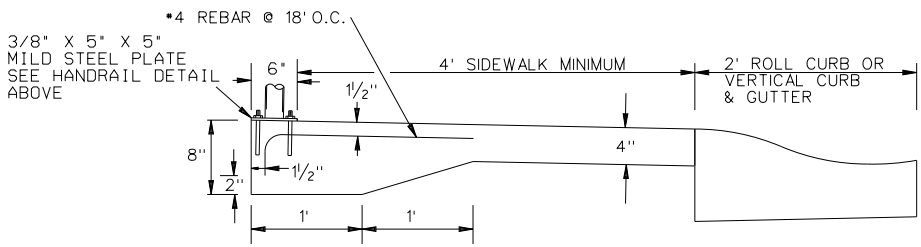

SIDEWALK DETAIL
NOT TO SCALE

RAILING NOTES:

1. ALL WELDING SHALL BE IN ACCORDANCE WITH THE AMERICAN WELDING SOCIETY (AWS) D1.1 USING E70XX ELECTRODES.
2. POSTS SHALL BE INSTALLED VERTICALLY & EVENLY SPACED.RAILINGS SHALL BE INSTALLED SO THAT THEY ARE PARALLEL TO THE TOP OF SIDEWALK
3. STEEL PIPE SHALL BE COATED WITH AN ULTRAVIOLETLY CURED CROSS LINK ACRYLIC COATING. COVERAGE SHALL BE 100%. THIS COATING SHALL SERVE AS A PRIMER FOR THE FINAL COAT APPLIED IN THE FIELD. FINAL COAT SHALL BE 'PRESCOTT TAN' OR APPROVED EQUAL.
4. ALL PIPE SHALL BE 14 GAUGE MEETING THE REQUIREMENTS OF ASTM 135 GRADE 48 (FY=48 KSI)
5. TOP RAIL ON END POSTS SHALL HAVE A 6"OUTSIDE RADIUS.
6. ADHESIVE STRIP REFLECTIVE BANDS (3 EA. POST) SHALL BE PLACED CENTERED BETWEEN HORIZONTAL POSTS ON EACH VERTICAL END POST OF HANDRAILS.
7. A.D.O.T. HANDRAIL DETAIL B-22.40 & 41 MAY BE SUBSTITUTED ONLY WITH APPROVAL OF THE CITY ENGINEER
8. SQUARE TUBING 2" X 2" X 0.188" MAY BE SUBSTITUTED ONLY WITH APPROVAL OF THE CITY ENGINEER

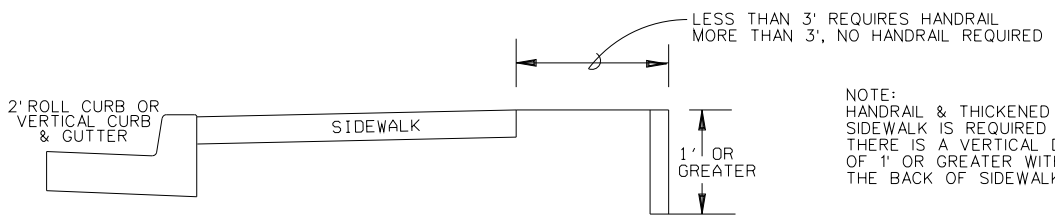

NOTE:
HANDRAIL & THICKENED EDGE SIDEWALK IS REQUIRED WHEREVER THERE IS A VERTICAL DROPOFF OF 1' OR GREATER WITHIN 3' OF THE BACK OF SIDEWALK

REVISED 03/09

DETAIL NO.			DETAIL NO.
1-01P	COP STANDARD DETAIL	HANDRAIL	1-01P

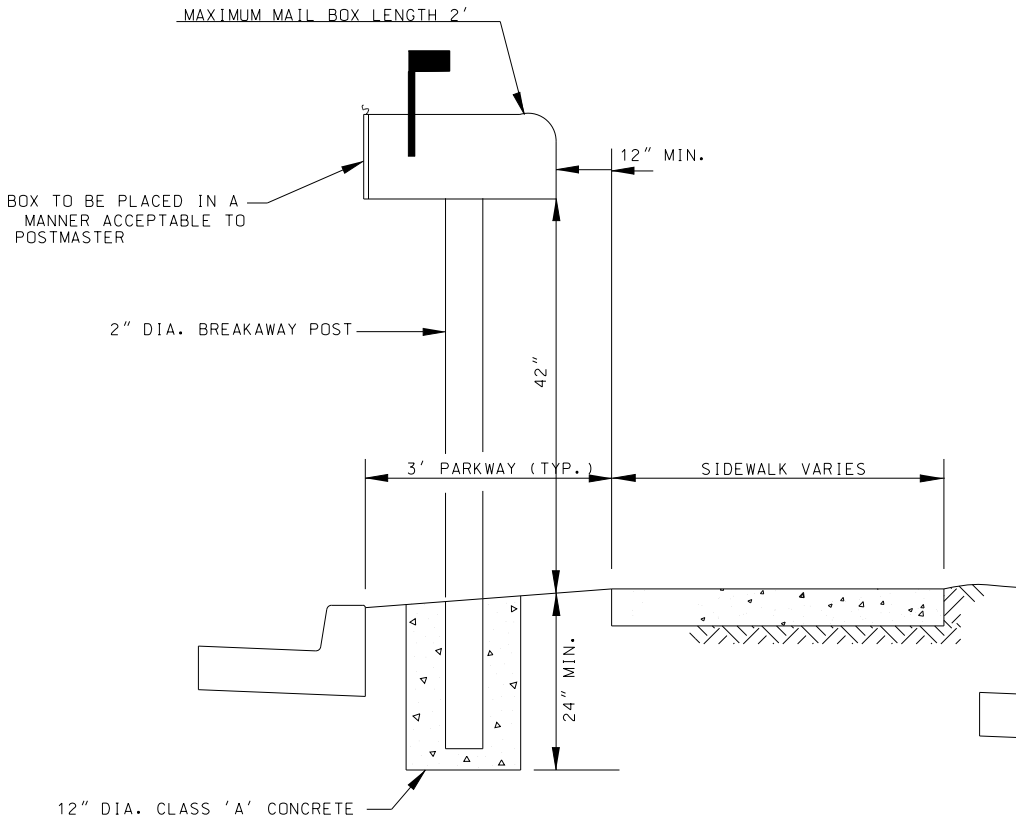

MAILBOX WITH PARKWAY

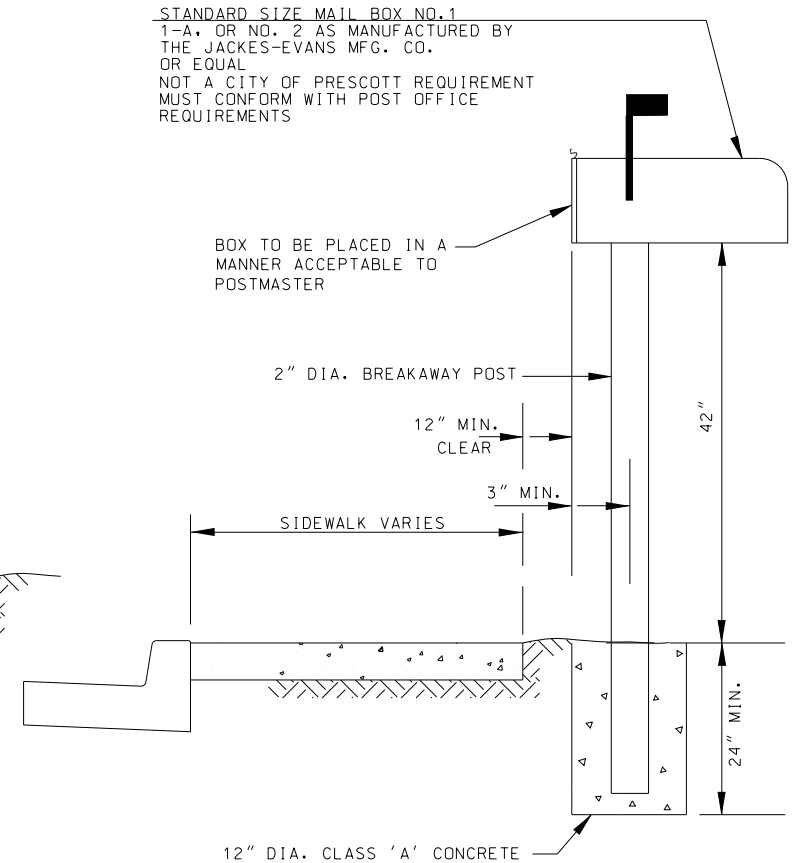

MAILBOX BEHIND SIDEWALK

NOTES:

SOLID OR ANCHORED STRUCTURES IN RIGHT-OF-WAY SHALL BE BREAKAWAY CONSTRUCTION TO LIMIT DAMAGE & INJURIES.

ANY DEVIATION FROM THIS DETAIL OR STANDARD MAILBOX MUST BE APPROVED BY THE CITY ENGINEER.

REV. 02/09

DETAIL NO.			DETAIL NO.
1-08P	COP STANDARD DETAIL	CITY OF PRESCOTT URBAN MAIL BOX	1-08P

NOTES:

1. TYPE 'A' TO BE USED AT INTERSECTION OF STREET CENTERLINES, CORNERS OR CHANGES IN ALIGNMENT OF SUBDIVISION BOUNDARIES (WHEN THEY FALL IN PAVEMENT), P.C.'S AND P.T.'S OF CURVES, AND AT OTHER POINTS AS SHOWN ON PLANS.
2. TYPE 'C' TO BE USED AT PC, PT, AND PI POINTS ON RIGHT-OF-WAY AND SUBDIVISION BOUNDARIES WHERE SUCH POINTS FALL OUTSIDE OF PAVED AREAS ONLY.
3. FRAME & COVER TO INCLUDE CHAIN PER COP DET. 270P. (OPTIONAL PER AGENCY REQUIREMENTS.)

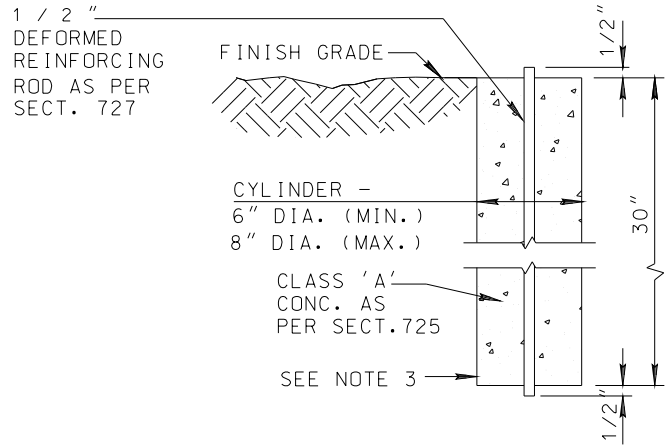

TYPE 'C'
OUTSIDE PAVED AREAS ONLY

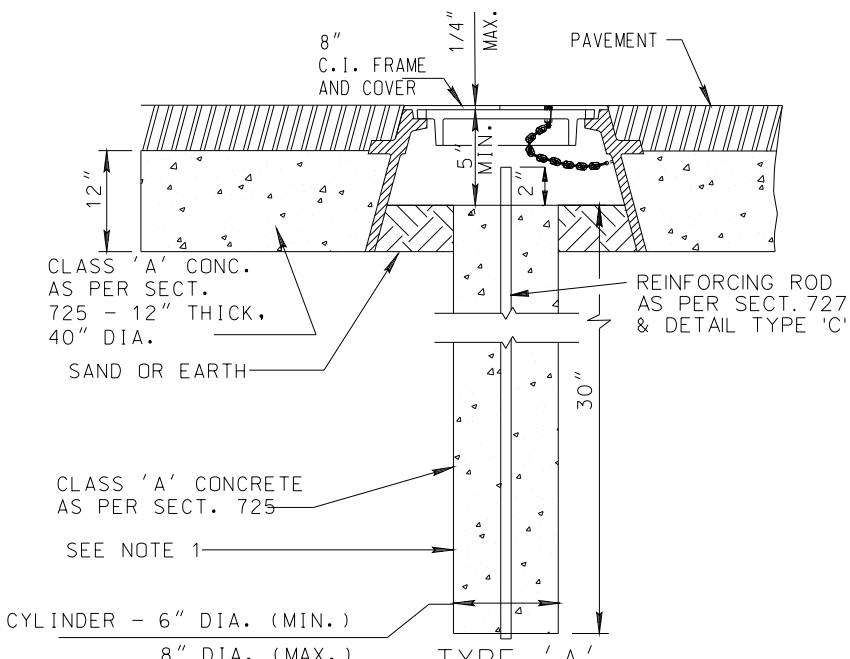

TYPE 'A'
(WITH FRAME PER DETAIL COP 270P)

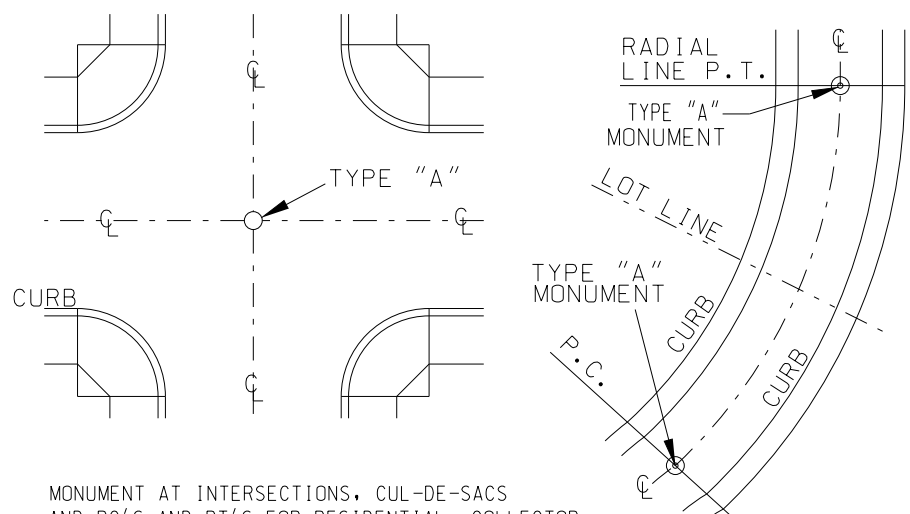

MONUMENT AT INTERSECTIONS, CUL-DE-SACS AND PC'S AND PT'S FOR RESIDENTIAL, COLLECTOR AND ARTERIAL STREETS.

revised 01/09

DETAIL NO.			DETAIL NO.
120-1P	COP STANDARD DETAIL	SURVEY MARKER	120-1P

MILLED AREA REQUIRED TO ACCOMODATE TRENCH PLATES FOR VEHICULAR ACCESS, MILL EXISTING AC TO ACCEPT TRENCH PLATES (1' MIN.) ON BOTH SIDES OF TRENCH.

AC TRENCH PAVEMENT REPLACEMENT AS PER YAG & MAG SECTION 601.5 & 336 3/8" CHIP SEAL ON RESIDENTIAL STREETS ONLY.

SAWCUT EDGE WIDTH OF TRENCH

REMOVE EXISTING PVMT. & REPLACE WITH NEW M.A.G. C-1/2 AC. THE USE OF COLD MIX FOR TEMPORARY PATCHES IS NOT ALLOWED IN C.O.P. PUBLIC RIGHT OF WAYS. U.P.M. (MFG. UNIQUE PAVING MATERIALS) MAY BE SUBSTITUTED WHEN HOT MIX AC IS UNAVAILABLE OR INCLEMENT WEATHER CONDITIONS EXIST. CONTACT C.O.P. FIELD OPERATIONS FOR A LIST OF SUPPLIERS MATCH AC THICKNESS IN KIND (3" MIN.) COMPACTED 95% ASTM D-1559. ALL AREAS OF EXISTING AC SHALL BE TACK COATED AS PER M.A.G. SPECIFICATIONS. 1 1/2" TEE SHALL BE MONOLITHIC.

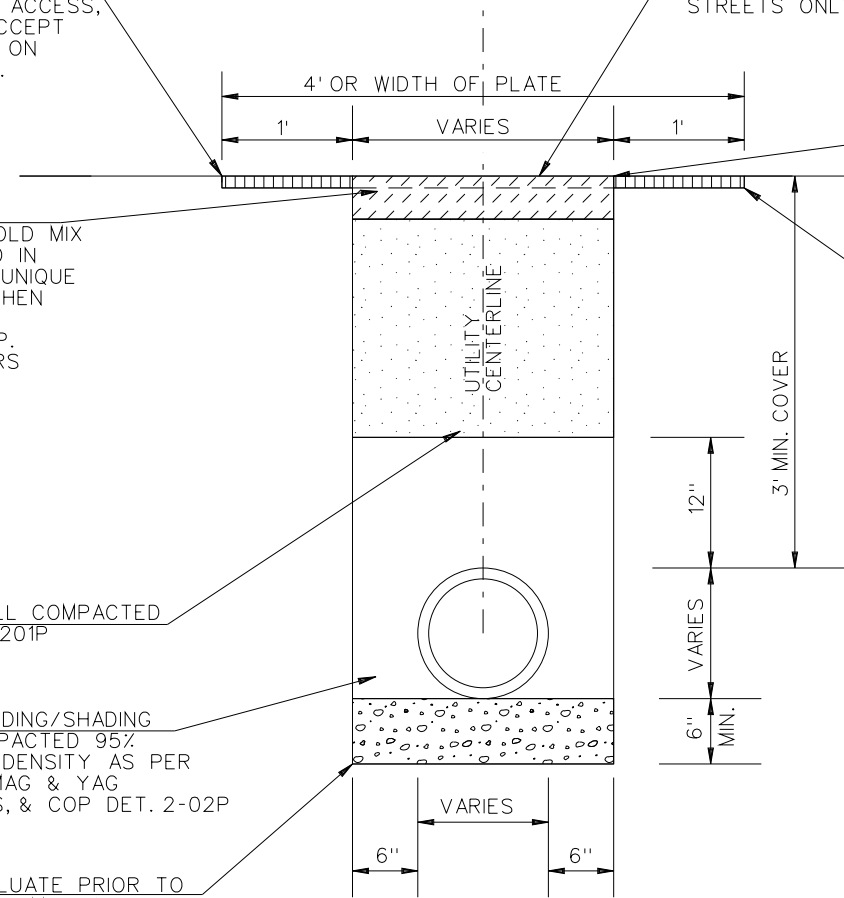

1' MIN. WIDTH X 1.5" MIN. DEPTH MILL OR COLD PLANE ALL SIDES OF EXCAVATION (OR AS DIRECTED BY CITY ENGINEER)

NON-SHRINK SLURRY BACKFILL COMPACTED IN 1' LIFTS PER COP DETAIL 201P (PAVED ROADS ONLY)

GRANULAR BEDDING/SHADING MATERIAL, COMPACTED 95% MAXIMUM DRY DENSITY AS PER ASTM D-698, MAG & YAG SPECIFICATIONS, & COP DET. 2-02P

CITY ENGINEER SHALL EVALUATE PRIOR TO PLACEMENT OF MATERIAL. FIRM, STABLE & UNIFORM SUPPORT REQUIRED FOR FULL PIPE LENGTH, COMPACTED TO 95% DEPENDING ON MATERIAL.

NOTE 1:
EXCAVATIONS 2 FT. OR LESS FROM LIP OF GUTTER SHALL REQUIRE FULL REMOVAL & REPLACEMENT IN KIND (3" MIN.) TO LIP OF GUTTER

NOTE 2:
WHEN EXISTING A.C. IS LESS THAN 3", FULL REMOVAL OF A.C. 1 FT. MIN. ON ALL SIDES OF EXCAVATION IS REQUIRED. REPLACEMENT SHALL BE 3" MINIMUM A.C.

SEE SHEET 2 OF R.O.W. PERMIT FOR WARRANTY REQUIREMENTS

REVISED 02/09

DETAIL NO.	C.O.P. STANDARD DETAIL	'T' TOP UTILITY TRENCH	DETAIL NO.
2-01P			2-01P

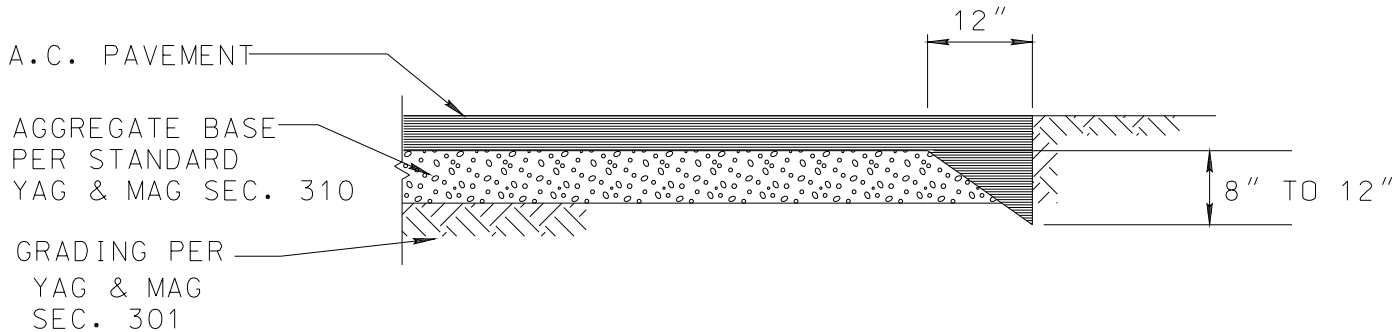

NOTES:

1. THICKENED EDGE REQUIRED AT ALL TRANSVERSE TERMINATIONS OF PAVING AND AT LONGITUDINAL EDGES FOR ASPHALT PAVEMENTS UNCONFINED BY CURB & GUTTER.

2. MATCHLINE TO EXISTING PAVEMENTS SHALL BE SKEWED OR OFFSET FOR SMOOTHER TRANSITION. LOCATION OF SAWCUT SHALL BE AS DIRECTED BY CITY ENGINEER OR HIS DESIGNEE.

3. EXISTING EDGES SHALL BE UNDISTURBED NATIVE, FIRM, & UNYEILDING SOIL OR FORMED TO PROVIDE FULLY COMPACTED STRAIGHT EDGES.

REVISED 01/09

DETAIL NO.			DETAIL NO.
201P	COP STANDARD DETAIL	THICKENED EDGE PAVEMENT SECTION	201P

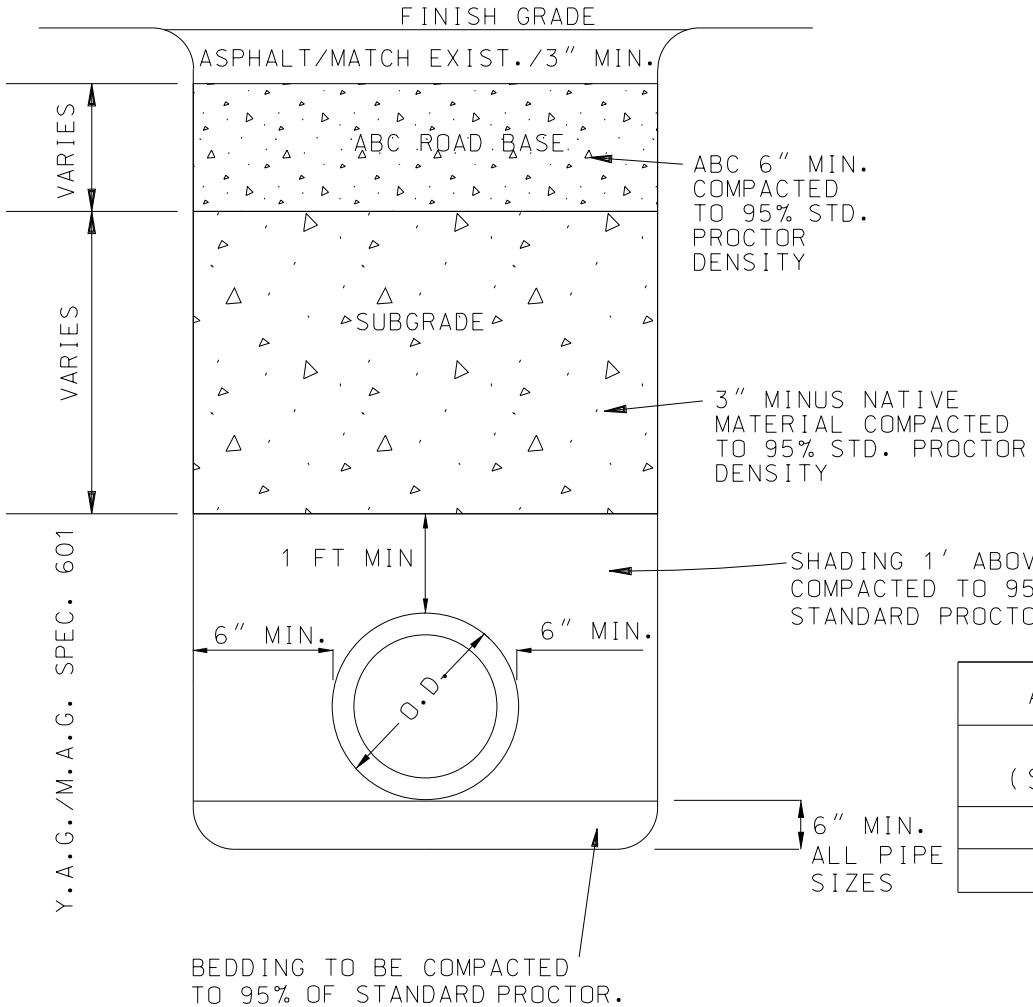

NOTES:

COMPACTION TESTING SHALL BE ACCOMPLISHED AT A MINIMUM OF ONE PER 200' OF TRENCH PER 1'LIFT OR AT THE DESCRETION OF THE INSPECTOR AS CONDITIONS MAY DICTATE.

VOLCANIC CINDERS OR CRUSHED GLASS MATERIALS ARE NOT ACCEPTABLE. USE OF OPEN GRADED 3/8" PEA GRAVEL OR 3/4" CRUSHED ROCK MUST BE APPROVED BY THE AGENCY PRIOR TO PLACEMENT.

ANY DEVIATION FROM THIS STANDARD DETAIL MUST BE APPROVED BY THE AGENCY ENGINEER.

A 2' MIN. SEPARATION IS REQUIRED BETWEEN WATER LINES & ALL OTHER UTILITIES.

TRACER WIRE SHALL BE INSTALLED AS PER CITY OF PRESCOTT STANDARD REQUIREMENTS.

ACCEPTABLE BEDDING/SHADING MATERIAL	
SIEVE SIZE (SQUARE OPENING)	PERCENTAGE BY WEIGHT PASSING SIEVE
1", NO. 200	100, <25
PI	10 MAX

revised 03/09

DETAIL NO.			DETAIL NO.
2-02P	COP STANDARD DETAIL	TRENCH BEDDING FOR SINGLE UTILITY TRENCH UNDERGROUND CONDUIT, WATER, SEWER, & STORM DRAIN	2-02P

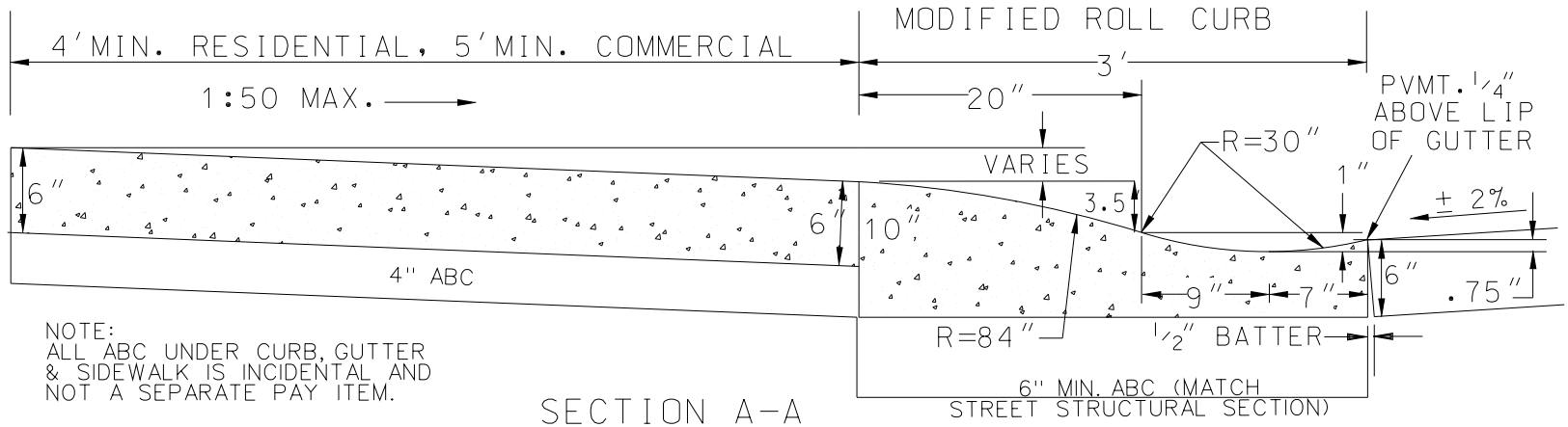

NOTE:
ALL ABC UNDER CURB, GUTTER & SIDEWALK IS INCIDENTAL AND NOT A SEPARATE PAY ITEM.

SECTION A-A

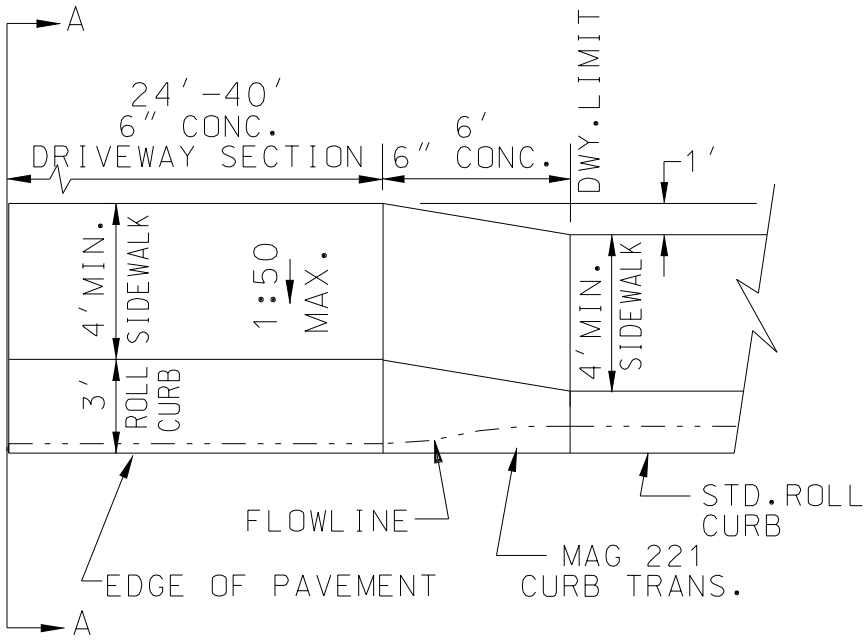

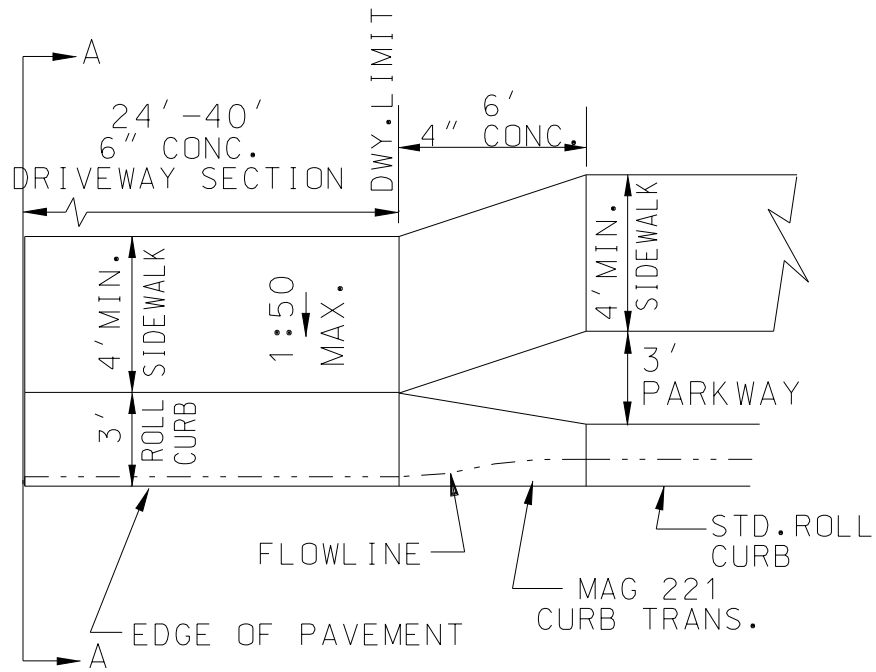

NOTE: ALL CONCRETE SHALL BE CLASS "A" AS PER M.A.G. SECTIONS 505,725,& 726

REVISED 01/09

DETAIL NO.			DETAIL NO.
2-18P	COP STANDARD DETAIL	MODIFIED ROLL CURB DRIVEWAY SECTION	2-18P

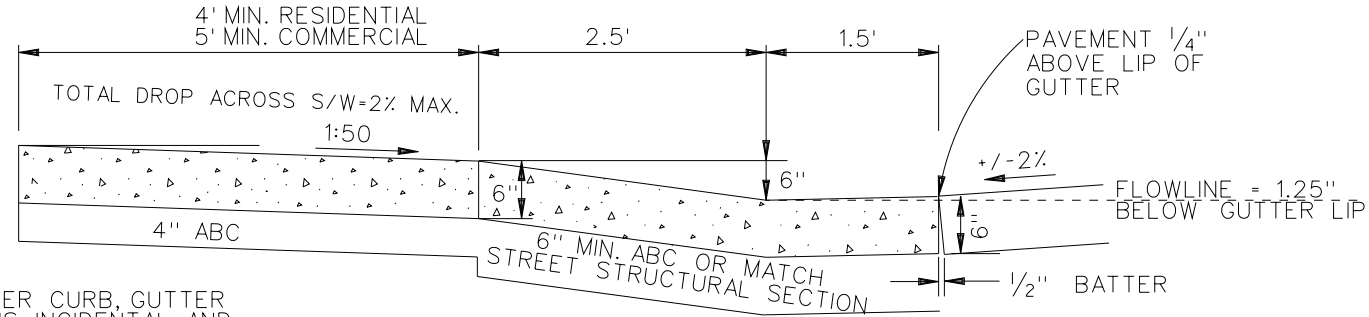

NOTE:
ALL ABC UNDER CURB, GUTTER & SIDEWALK IS INCIDENTAL AND NOT A SEPARATE PAY ITEM.

SECTION A-A

NOTE:
ALL CONCRETE SHALL BE CLASS 'A' & FOLLOW YAG & MAG SECTIONS 505,725, & 726

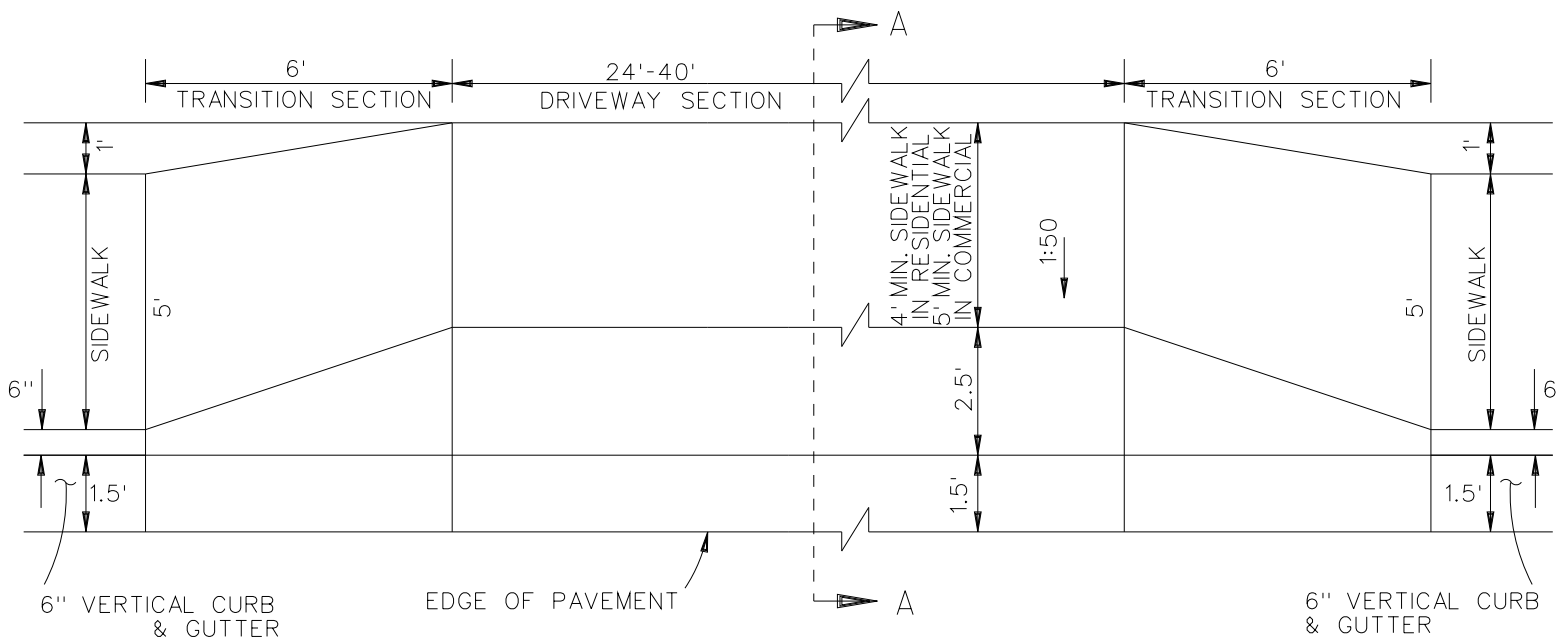

PLAN

REVISED 01/09

DETAIL NO.			DETAIL NO.
2-19P	COP STANDARD DETAIL	MODIFIED VERTICAL CURB DRIVEWAY	2-19P

VERTICAL CURB AND GUTTER (TYPE A)

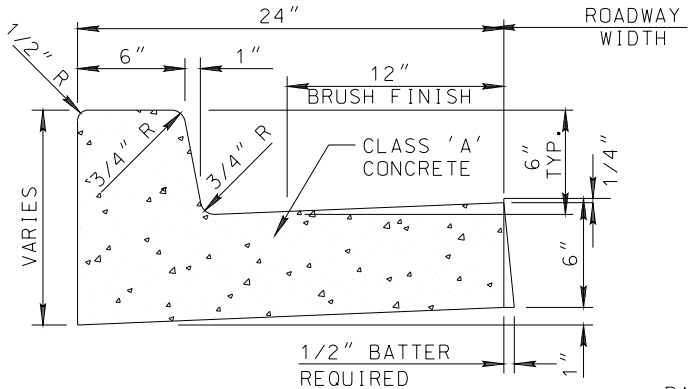

ROLL CURB AND GUTTER (TYPE C)

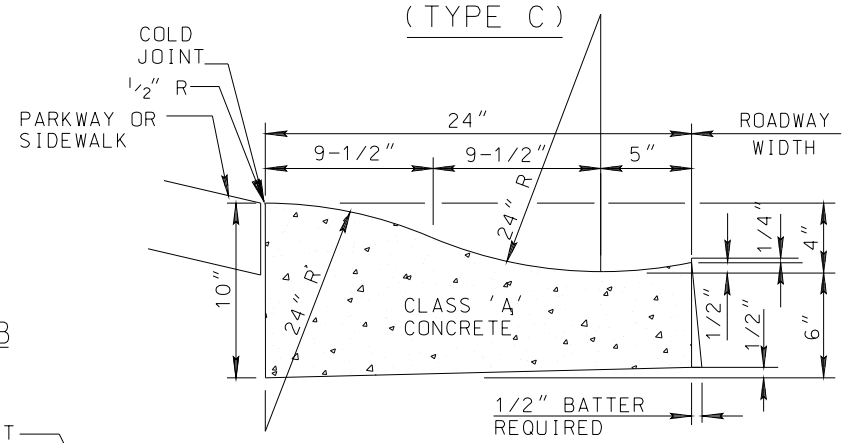

RIBBON CURB (TYPE B)

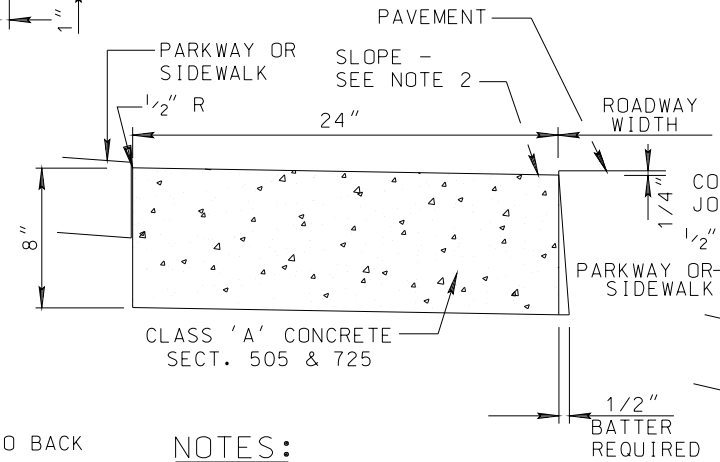

NOTES:

1. ALL EXPOSED SURFACES TO BE TROWEL FINISHED EXCEPT AS SHOWN. SEE SEC. 340 & 505 & 725
2. HEIGHT OF TYPE 'A' CURB SHALL BE 6" UNLESS SPECIFIED ON PLANS
3. CONTRACTION JOINT SPACING 10' MAXIMUM.
4. EXPANSION JOINTS AS PER SECT. 340. 50' MAX. AT P.C., DWY., ALLEYS & STRUCTURES
5. 4" MINIMUM OF ABC SHALL EXTEND TO BACK OF CURB BELOW ALL CURB & GUTTER.
6. IN NEW CONSTRUCTION, UTILITY FEATURES SHALL NOT BE LOCATED IN CURB, GUTTER OR SIDEWALK.
7. 1/4" ROUND FINISH SHALL BE REQUIRED AT LIP OF GUTTER, ALL DETAILS.
8. ALL PAVEMENT SHALL BE 1/4" ABOVE CURBS EXCEPT WHERE ACFC IS SPECIFIED TO BE PLACED & TYPE 'D'.

NOTES:

1. CONSTRUCT CURB AND INSTALL 1/2" MASTIC EXPANSION JOINTS, A.S.T.M. D-1751. SECT. 340.
2. RIBBON CURB MAY SLOPE TOWARDS PAVEMENT OR PARKWAY AS INDICATED ON PLANS.

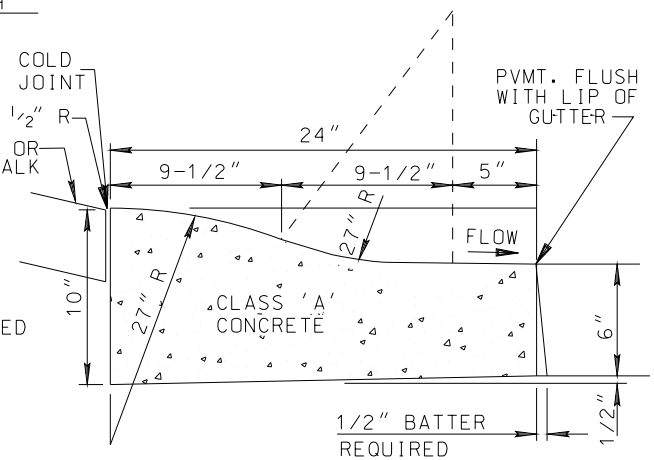

(TYPE D)

SPECIAL SECT. USE FOR HIGH SIDE CURB WITH SHEET DRAINAGE REVERSE FLOW ACROSS STREET

REVISED 01/09

DETAIL NO.			DETAIL NO.
220P	COP STANDARD DETAIL	CURB AND GUTTER - TYPES A, B, C AND D	220P

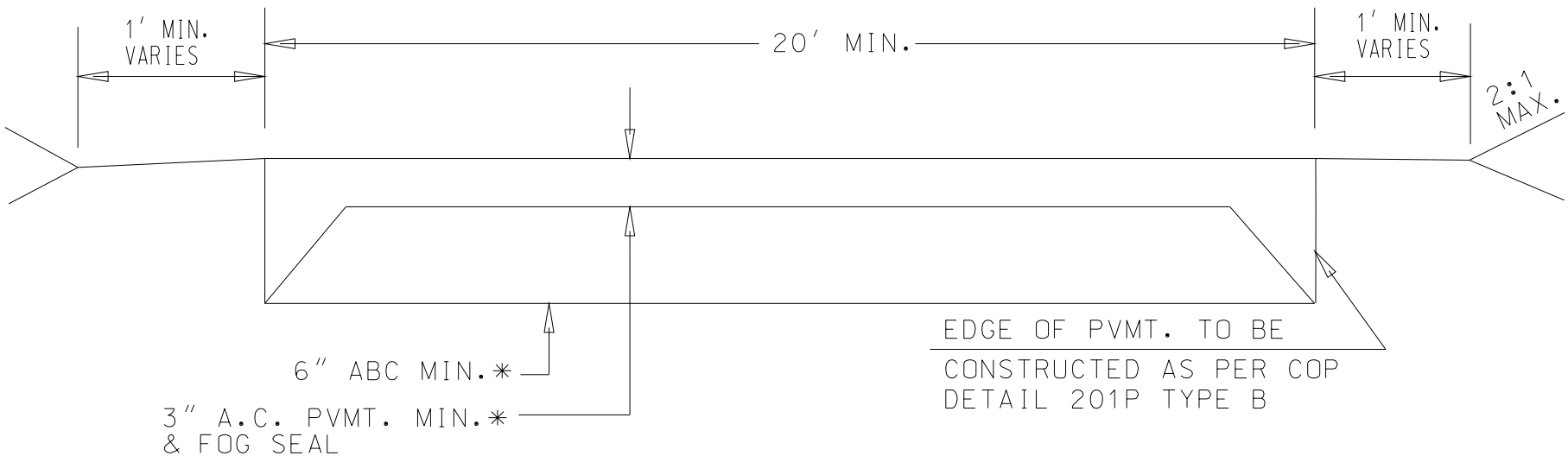

TYPICAL CROSS SECTION

(NO SCALE)

* NOTE:
ACTUAL STRUCTURAL SECTION SHALL BE DETERMINED BY GEO-TECHNICAL ENGINEER & DESIGNED FOR HEAVY EQUIPMENT

REVISED 01/09

DETAIL NO.			DETAIL NO.
2-27P	COP STANDARD DETAIL	ACCESS FIRE LANE	2-27P

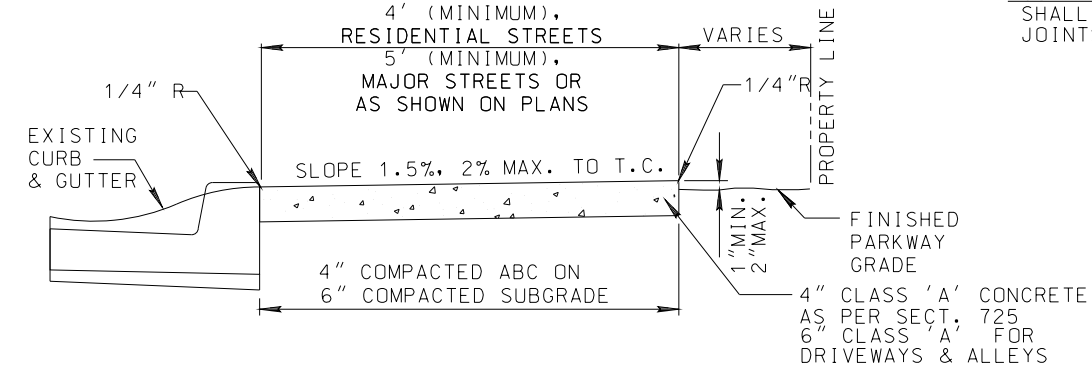

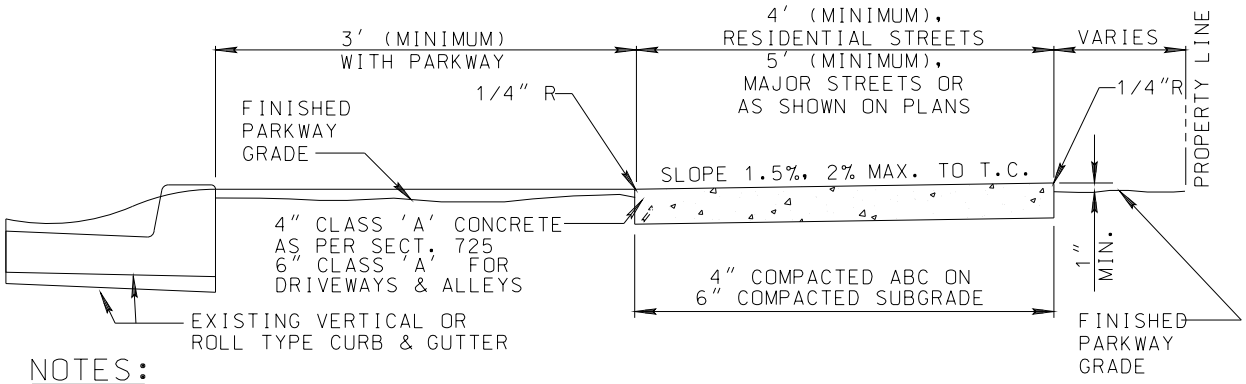

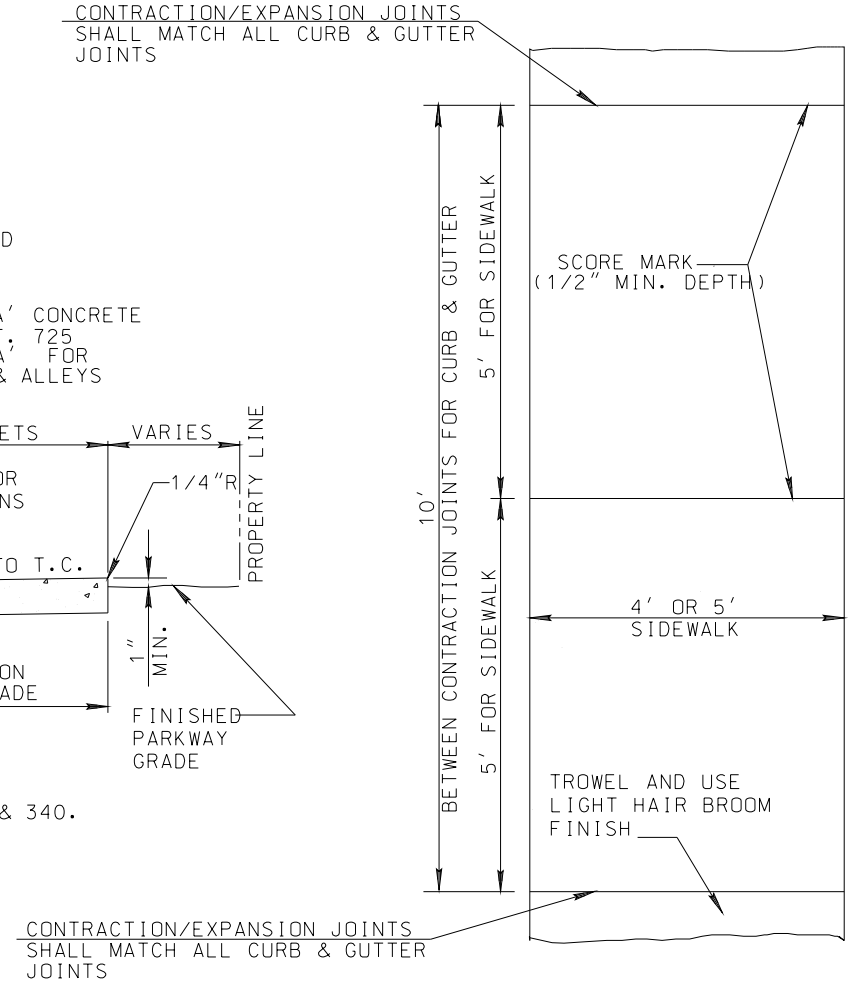

NOTES:

1. SIDEWALK CONSTRUCTION SHALL CONFORM TO YAG & MAG SECTIONS 725 & 340.
2. EXPANSION JOINT FILLER SHALL BE 1/2" BITUMINOUS TYPE PREFORMED EXPANSION JOINT FILLER, A.S.T.M. D-1751.
3. LARGE AGGREGATE, IN CONTRACTION JOINT, SHALL BE SEPARATED TO A DEPTH OF 1". FINISH DEPTH SHALL BE A MINIMUM OF 3/4".
4. EXPANSION JOINT 50' MAX. SPACING PER SECT. 340 & AT ALL P.C.'S, DRIVEWAYS, ALLEYS, & STRUCTURES.
5. SUBGRADE TO BE COMPACTED TO 95% OF MAXIMUM PER SECT. 301. MOISTURE TO BE 2% OVER OPTIMUM IN COHESIVE SOILS.
6. 4" MINIMUM OF ABC SHALL EXTEND TO BACK OF SIDEWALK.
7. IN NEW CONSTRUCTION, UTILITY FEATURES SHALL NOT BE LOCATED IN CURB, GUTTER OR SIDEWALK.

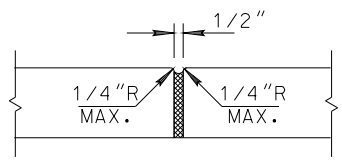

EXPANSION JOINT

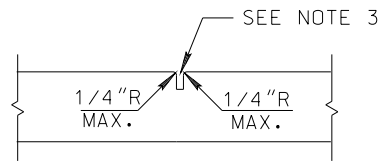

CONTRACTION JOINT

REVISED 01/09

DETAIL NO.			DETAIL NO.
230P	COP STANDARD DETAIL	SIDEWALKS	230P

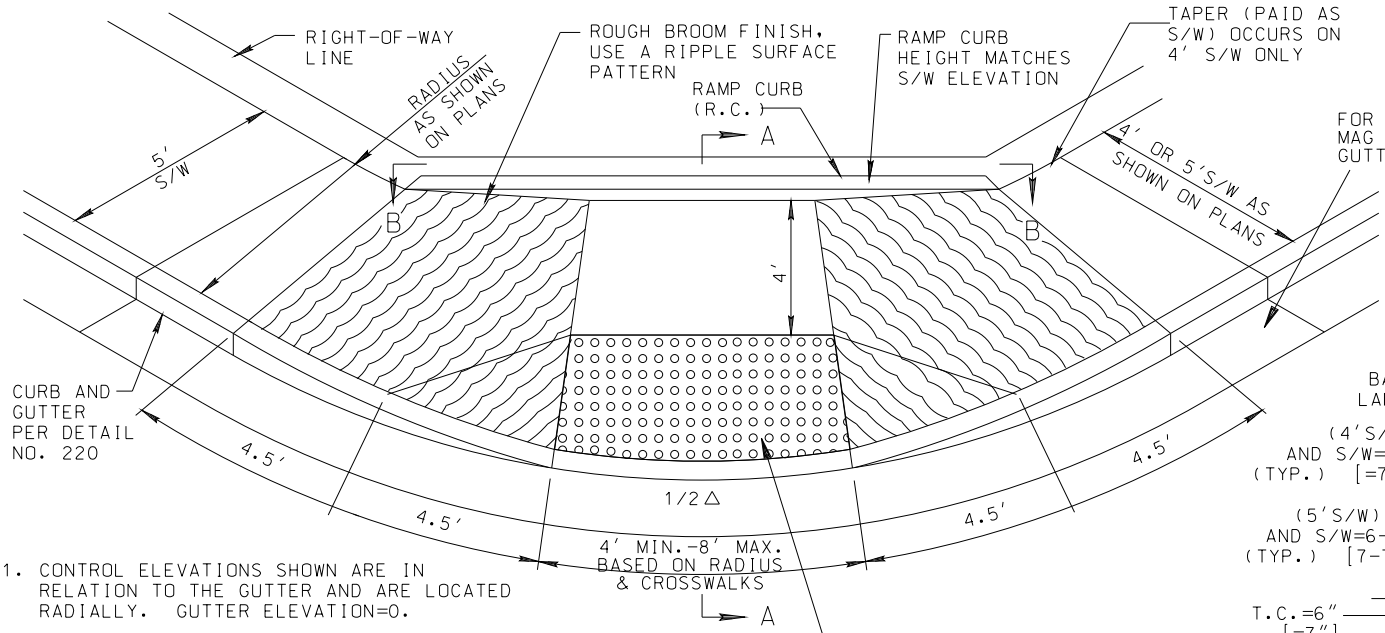

DETECTABLE WARNING PANEL OF TRUNCATED DOMES: MASCO CASTINTACT OR APPROVED EQUAL; COLOR SALEM RED

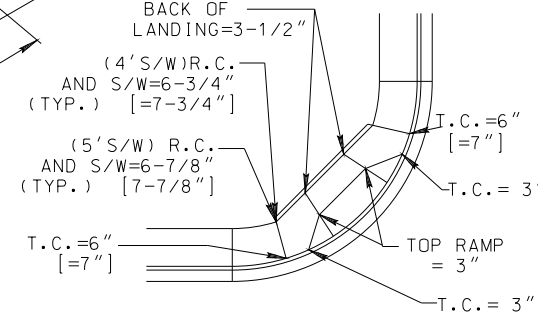

1. CONTROL ELEVATIONS SHOWN ARE IN RELATION TO THE GUTTER AND ARE LOCATED RADIALLY. GUTTER ELEVATION=0.
2. CLASS 'A' CONCRETE CONSTRUCTION AS PER YAG & MAG SECTIONS 725 & 340.
3. ADOT DETAIL C-05.30 SHALL BE USED FOR RAMPS WITH TRAFFIC SIGNAL POLES.
4. SIDEWALK 10' BOTH SIDES OF RAMP, INCLUDING RAMP, SHALL BE 6" CONCRETE.
5. LENGTH OF WINGS VARY WITH RUNNING SLOPE OF ROADS. SEE WING LENGTH TABLE. MAXIMUM SLOPE OF RAMPS SHALL NOT EXCEED A.D.A. REQUIRED 8.33%.

WING LENGTH TABLE

CURB FACE	RADIUS (FT)	SIDE SLOPE	X	T.C. GRADE (ALONG CURB RETURN) 1%	2%	3%	4%	5%	6%
6"	25'	8.33%	X_S	5.4'	4.9'	4.5'	4.1'	3.8'	3.5'
			X_L	6.9'	7.9'	9.4'	11.6'	15.0'	15.0'

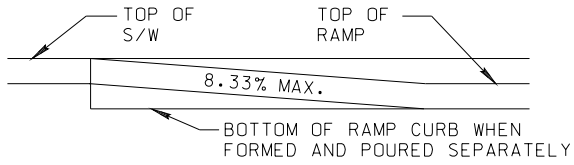

SECTION B-B

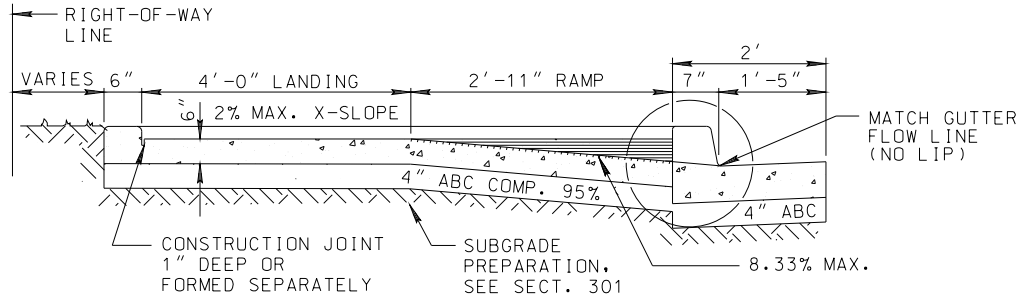

SECTION A-A

REVISED 02/09

DETAIL NO.			DETAIL NO.
231P	COP STANDARD DETAIL	SIDEWALK RAMPS - TYPE 'A'	231P

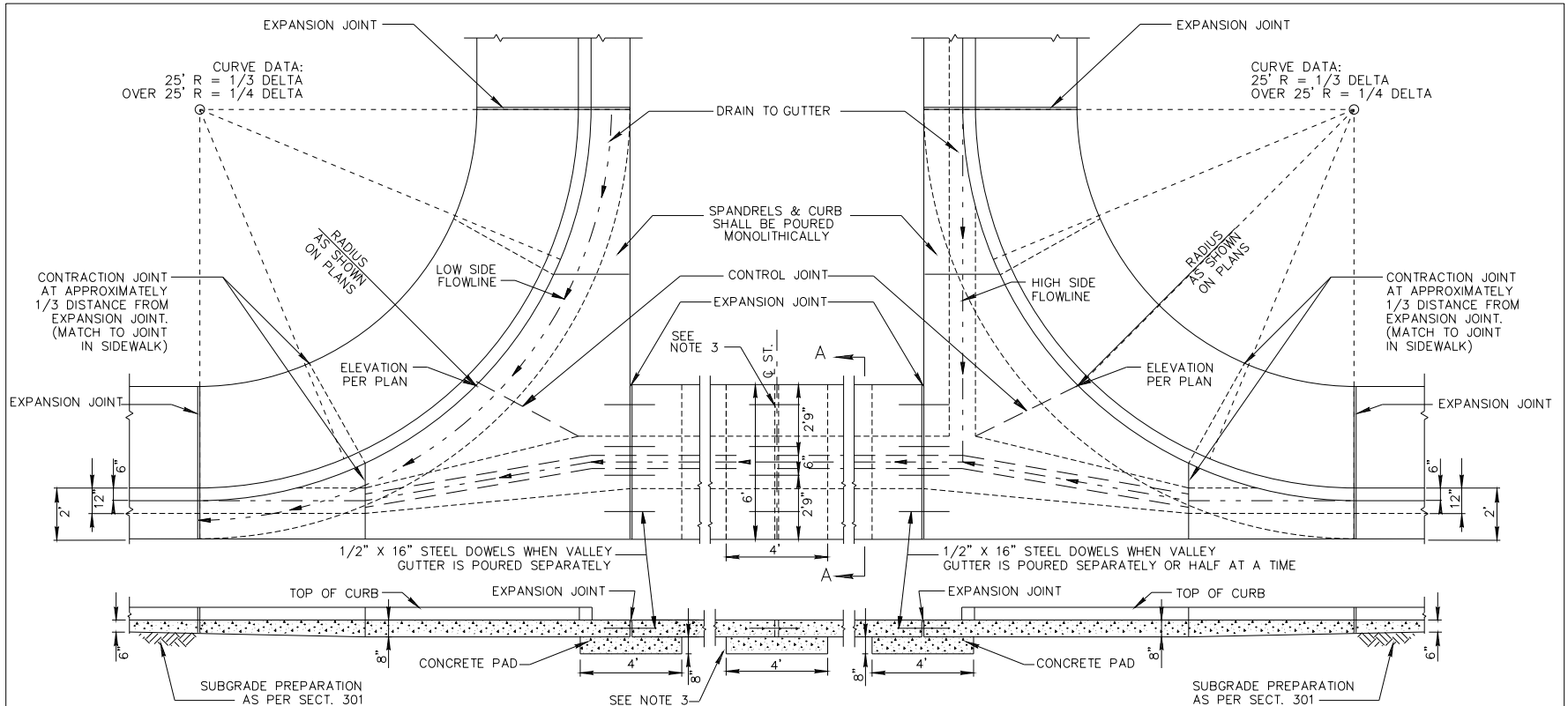

NOTES:

1. CONCRETE SHALL BE CLASS "AA" WITH 5–7% ENTRAINED AIR PORTLAND CEMENT CONCRETE 600 LBS. WITH 3/4" AGGREGATE MAX., 4000 P.S.I. AT 28 DAYS & SHALL HAVE A SLUMP OF NOT MORE THAN 4 INCHES, PER M.A.G. SEC. 340 & 725.
2. EITHER CONSTRUCTION JOINT OR CONTRACTION JOINT IS REQUIRED AT CENTERLINE OF STREET.
3. A SEPARATE CONCRETE PAD IS REQUIRED WHEN VALLEY GUTTER IS POURED SEPARATELY OR HALF AT A TIME.
4. EXPANSION JOINTS SHALL CONFORM TO SECT. 340.
5. NO CONCRETE SHALL BE PLACED PRIOR TO FORM INSPECTION BY THE CITY ENGINEER OR DESIGNEE.

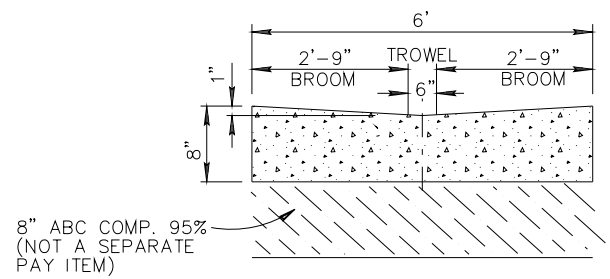

SECTION A–A
VALLEY GUTTER

REVISED 03/09

DETAIL NO.			DETAIL NO.
240P	COP STANDARD DETAIL	VALLEY GUTTER & SPANDRELS	240P

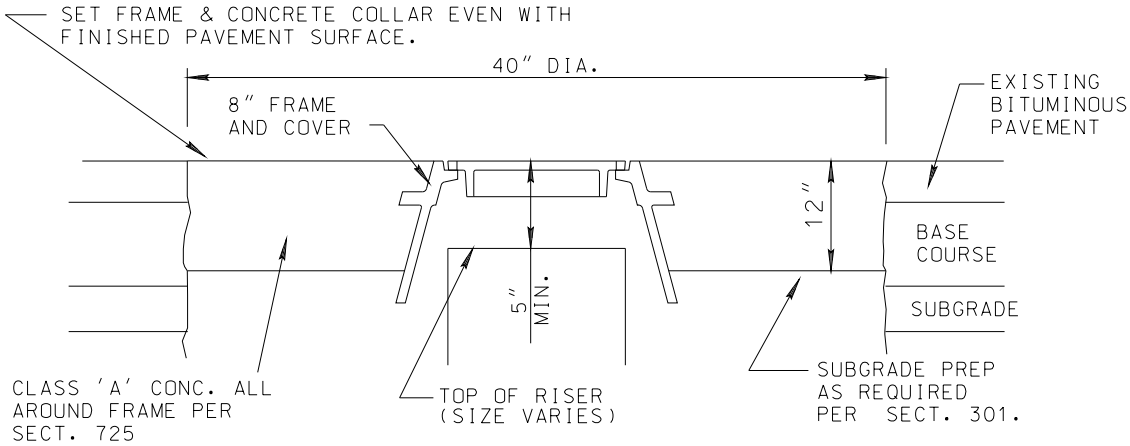

COMPACTION TO CONFORM TO SECT. 301 OR 601.

SEWER CLEANOUT FRAME AND GRADE ADJUSTMENT

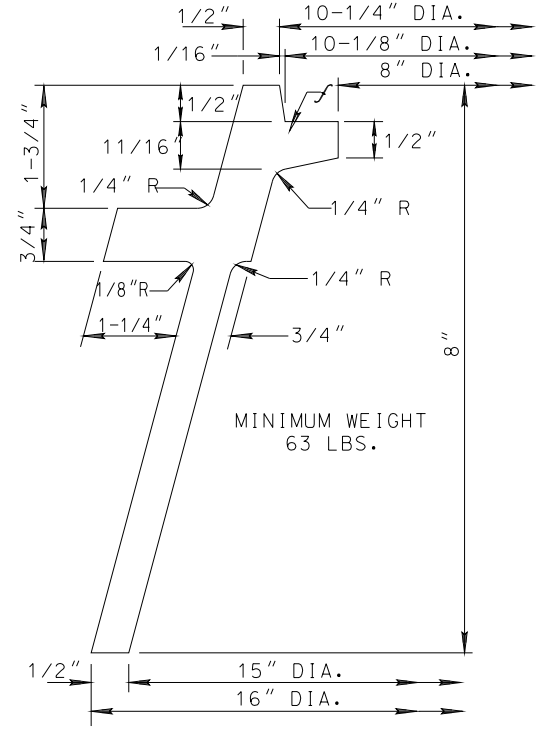

8" C.I. FRAME AND COVER

LETTERS ON COVER TO BE AS FOLLOWS:
"SEWER" OR AS DIRECTED.
TOTAL WIDTH OF WORD "SEWER" SHALL BE 3-3/4".
LETTER SIZE 5/8" X 3/4", RAISED 1/16" ABOVE LEVEL OF COVER, TYPE OF LETTERS TO BE SUBMITTED FOR APPROVAL.
ANY COVER WITHIN A ROADWAY OR DRIVEWAY SHALL BE TRAFFIC RATED.

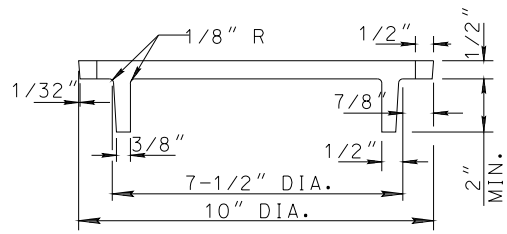

COVER SECTION A-A

DETAIL TYPICAL FOR BOTH FRAME AND COVER

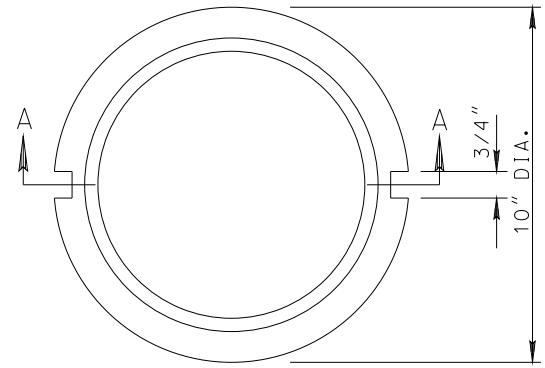

REV. 01/09

DETAIL NO.			DETAIL NO.
270P	COP STANDARD DETAIL	SEWER CLEANOUT FRAME AND COVER ADJUSTMENT	270P

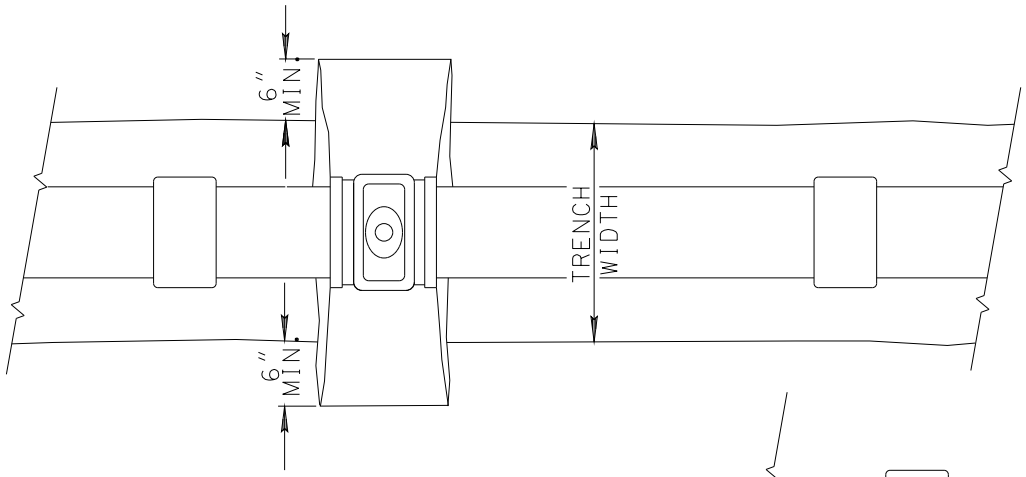

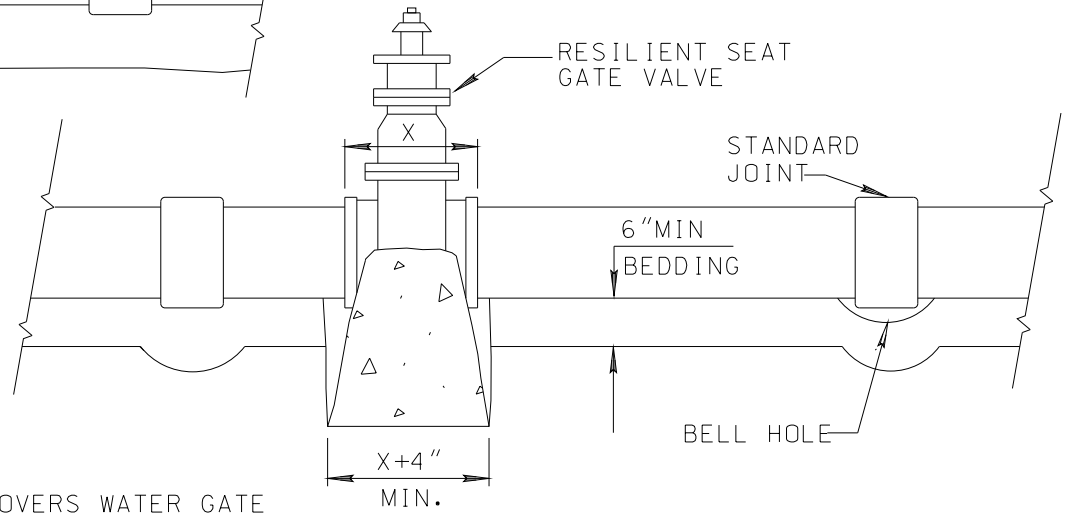

NOTE:
WRAP ALL JOINTS & VALVE WITH 8 MIL SHEET PLASTIC

NOTE:
THIS DETAIL COVERS WATER GATE VALVES, 4" TO 16" INCLUSIVE, REGARDLESS OF TYPE OF PIPE USED. LARGER LINES TO BE DETAILED ON PLANS.
UTILIZE VALVE BOX, COP 3-15P

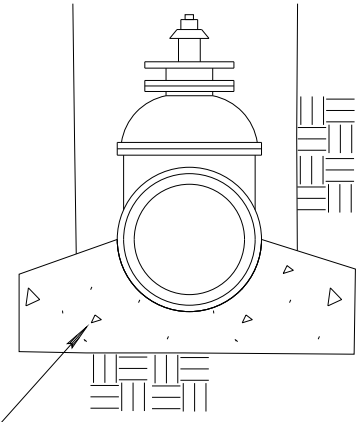

CONCRETE: CLASS "A" AS PER MAG STD. SPECIFICATION 725 & 340.
FORM AS REQUIRED TO KEEP BOLTS AND JOINTS EXPOSED AND CLEAR FROM CONCRETE.

REV. 01/09

DETAIL NO.			DETAIL NO.
3-03P	COP STANDARD DETAIL	BLOCKING FOR WATER GATE VALVES	3-03P

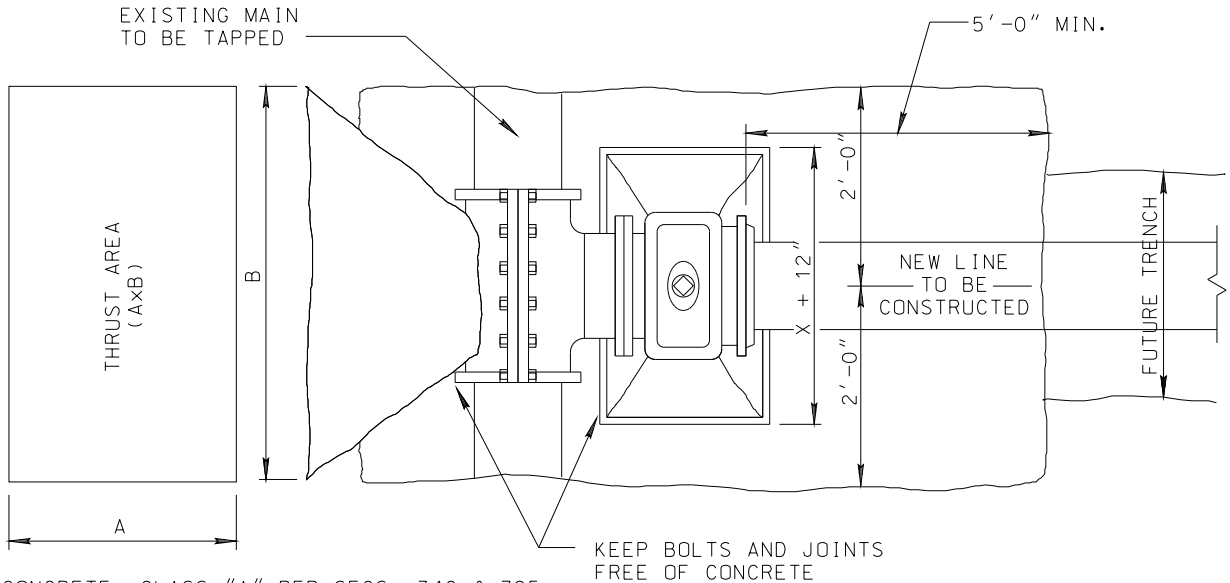

CONCRETE: CLASS "A" PER SECS. 340 & 725 NORMALLY, CURE 24 HOURS BEFORE BACKFILLING.

PLAN

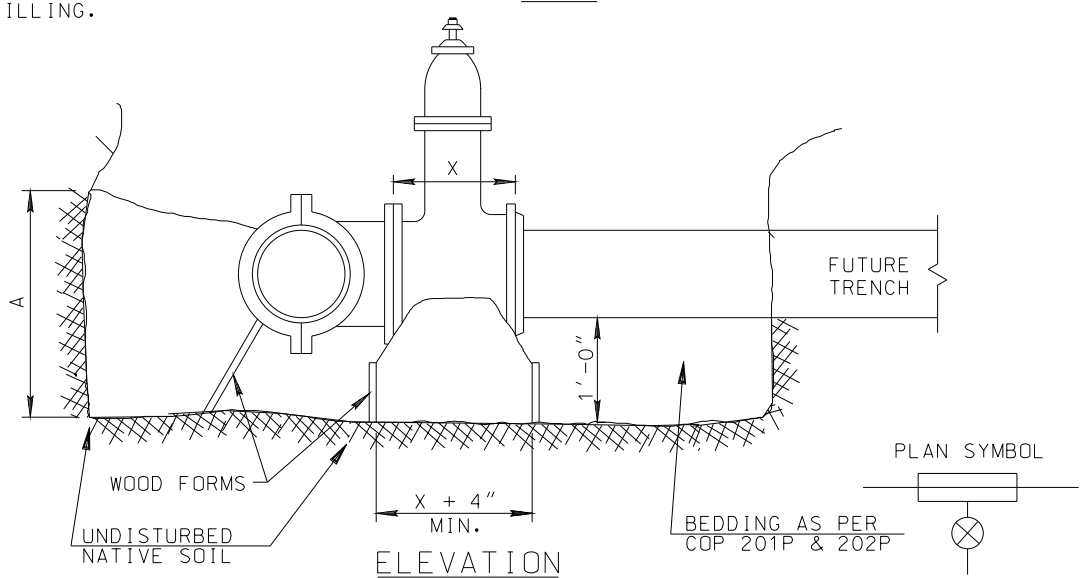

ELEVATION

NOTES:

1. BLOCKING IS TO EXTEND TO UNDISTURBED GROUND.
2. ALL TAPS SHALL BE MADE BY AGENCY CREWS AT PREVAILING RATES.
3. INSTALL TEMPORARY BLOCKING UNDER VALVE BEFORE TAP IS MADE. ALL FLANGE BOLTS SHALL BE CLEAR OF FOOTING.
4. TAPPING SLEEVES ARE TO BE STAINLESS STEEL, CLASS 200 PSI.
5. INSTALLATION SHALL BE LEAK TESTED PRIOR TO TAP
6. TAPPING SLEEVE SHALL BE PLACED AT A MINIMUM OF 18" FROM ANY BELL, COUPLING, VALVE, FITTING, OR OTHER OBSTRUCTION
7. PROTECT ALL CONCRETE CONTACT AREAS WITH 8 MIL SHEET PLASTIC
8. THRUST BLOCKING PER M.A.G. DET. 380 & SECTION 610.
9. INSTALL VALVE RISER & FRAME & COVER PER COP 3-15P.

SIZE OF PIPE BEING CONNECTED	MINIMUM THRUST AREA REQUIRED EQUALS (AxB) (SQUARE FEET)
4" AND LESS	3
6"	4
8"	6
10"	9
12"	13
16"	23

REV. 03/09

DETAIL NO.			DETAIL NO.
3-05P	COP STANDARD DETAIL	INSTALLING TAPPING SLEEVES AND VALVES	3-05P

NOTES:

1. BOTH METERS SHALL BE RADIO READ WITH ERT MOUNTED WITHIN 6" OF FINISH GRADE.
2. METER VAULTS MAY BE EITHER BLOCK MASONRY OR CAST-IN-PLACE OR PRE-CAST CONCRETE, SEE COP 321 DETAILS FOR VAULT CONSTRUCTION.
3. PLACE STEPS PER COP 4-03P OFFSET TO ONE SIDE FOR STEPS/LADDER

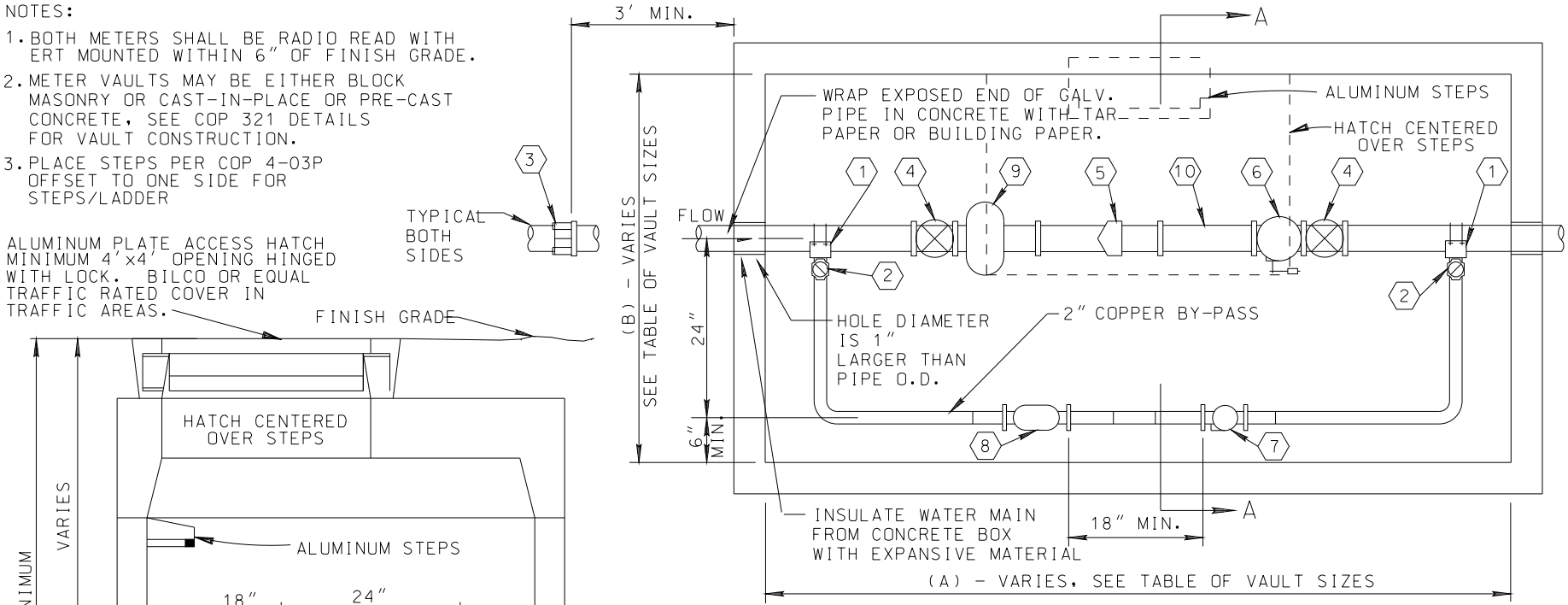

1. DOUBLE STRAP ALL BRONZE SADDLE
2. CORP STOP 2" BALL TYPE
3. FLEXIBLE COUPLING
4. GATE VALVE R/S FLANGED WITH HAND WHEEL
5. AMCO OR BADGER RADIO READ
6. FLANGED CHECK VALVE WITH EXTERNAL LEVER & WEIGHT
7. 2" BRONZE CHECK VALVE
8. 2" BYPASS METER AMCO OR BADGER TURBOMETER
9. STRAINER REQUIRED ONLY WHEN TURBINE METER USED
10. FLANGED SPOOL (MIN. 3 PIPE DIAMETERS IN LENGTH)
11. 2" THREADED
12. METERS TO BE SUPPLIED BY AGENCY

VAULT DIMENSION DETAILS

METER SIZE	3"	4"	6"
(A)	8'4"	10'-6"	12'
(B)	4'-4"	5'	5'

REV. 01/09

DETAIL NO.			DETAIL NO.
3-06P	COP STANDARD DETAIL	VAULT FOR 3", 4" & 6" WATER METERS	3-06P

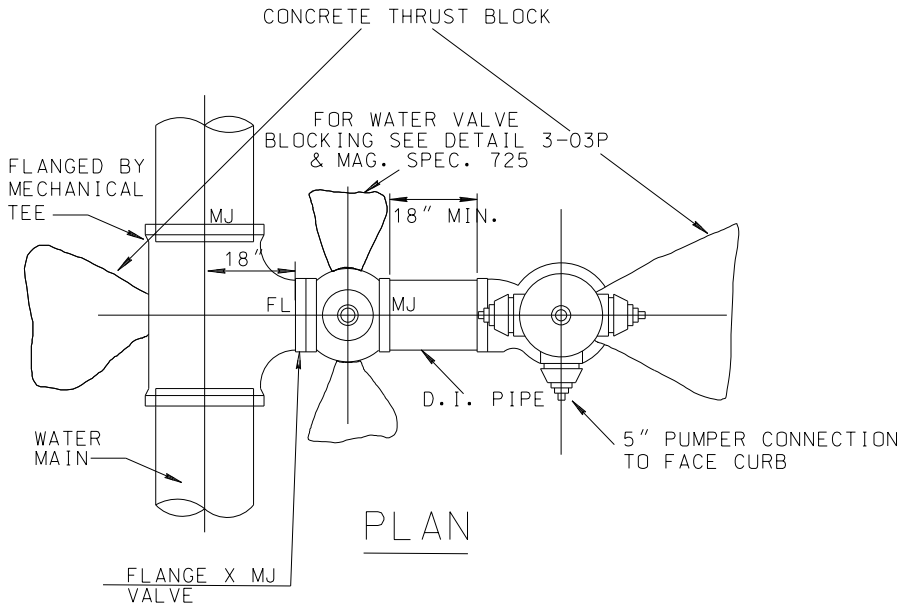

PLAN

NOTES:

1. ALL HYDRANTS WHICH ARE PRIVATELY MAINTAINED AND OWNED ARE TO BE PAINTED RED.
2. ALL HYDRANTS TO BE WATEROUS, MUELLER, CLOW, OR APPROVED EQUAL.
3. HYDRANTS SHALL BE STRAIGHT RUNS FROM MAIN LINE.
4. TRACER WIRE SHALL BE USED AS PER COP STD. DTL. 3-19P. LOOP AT GROUND LEVEL AROUND HYDRANT.

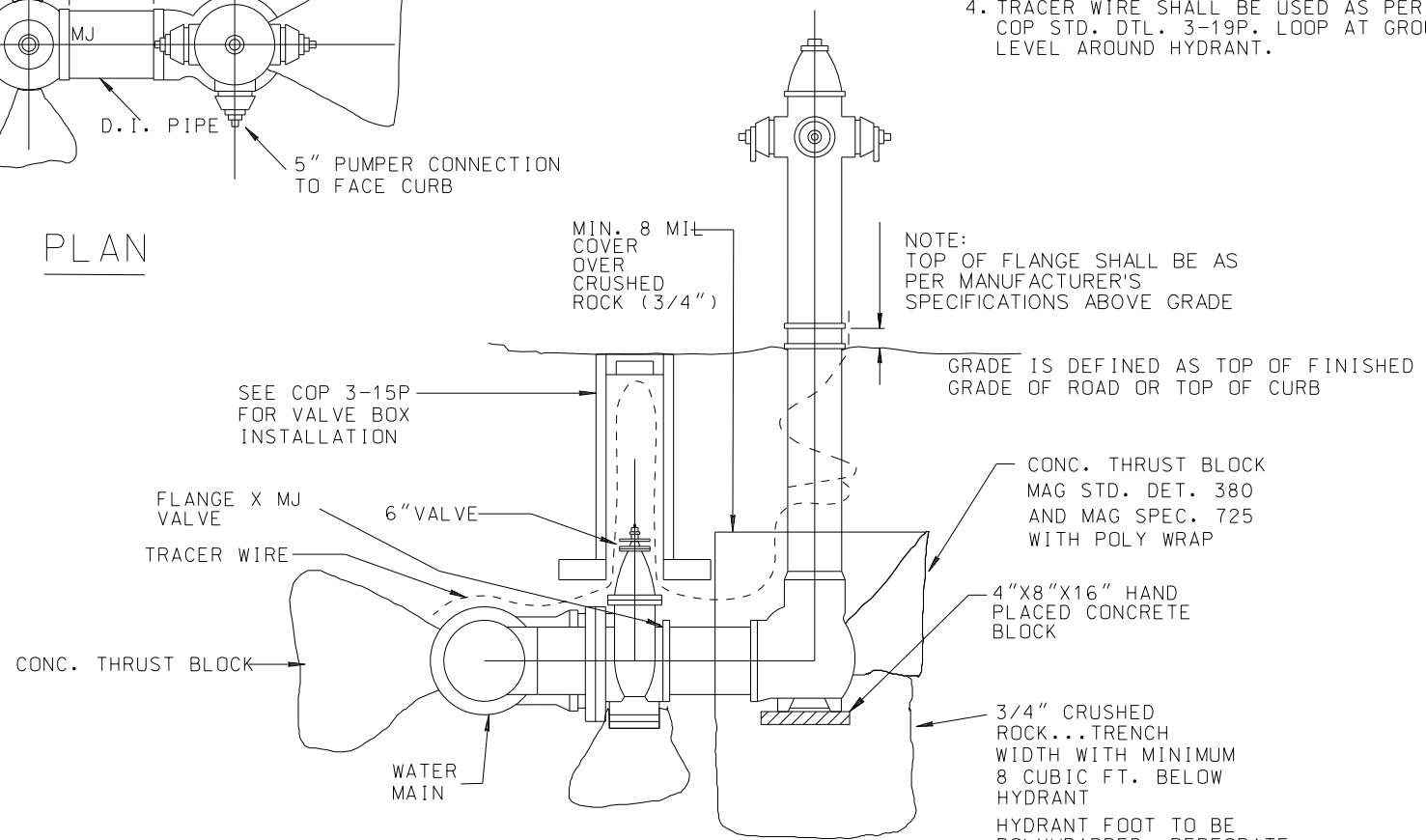

ELEVATION

REVISED 03/09

DETAIL NO.			DETAIL NO.
3-07P	COP STANDARD DETAIL	FIRE HYDRANT INSTALLATION	3-07P

PROTECTION POLE PLACEMENT

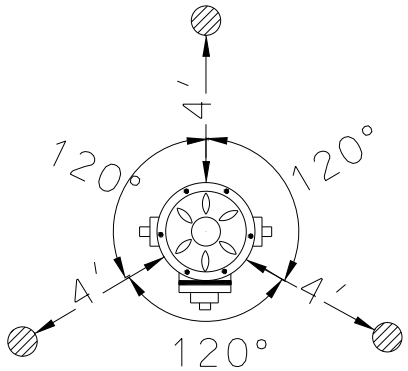

NOTES:

1. DO NOT PLACE POLES IN FRONT OF NOZZLE.
2. POLES MAY BE CHANGED IN NUMBER AND ARRANGEMENT DEPENDING ON INDIVIDUAL NEED.
3. REQUIRED AT SPECIFIED LOCATIONS ONLY.

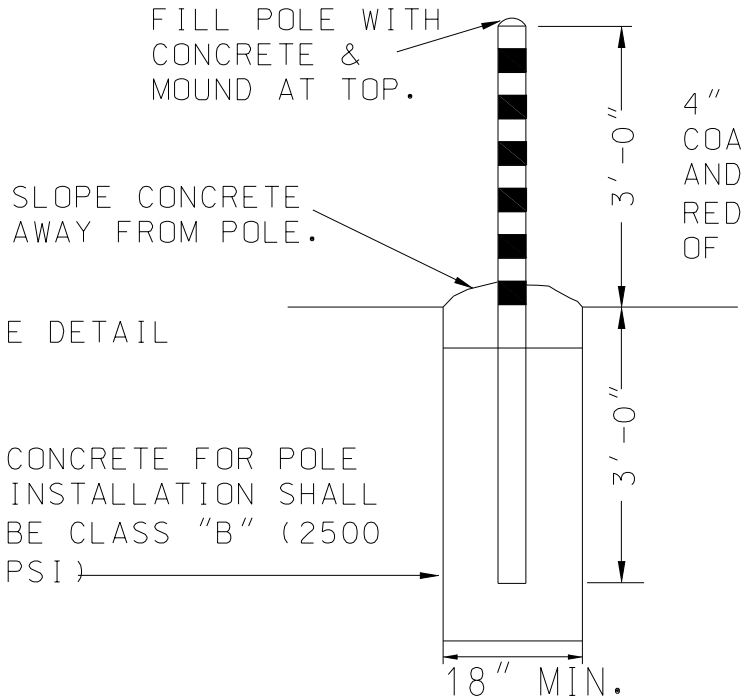

4" I.D. STEEL POLE. PAINT WITH ONE COAT INDUSTRIAL SYNTHETIC PRIMER AND ONE COAT INDUSTRIAL SYNTHETIC RED ENAMEL. STRIPE WITH 3" BANDS OF WHITE REFLECTORIZED PAINT OR TAPE.

PROTECTION POLE DETAIL

REV. 01/09

DETAIL NO.			DETAIL NO.
3-09P	COP STANDARD DETAIL	FIRE HYDRANT PROTECTION POLE	3-09P

NOTES:

1. OBSTRUCTIONS SUCH AS UTILITY POLES, STREET SIGNS, IRRIGATION BOXES, FENCES, LANDSCAPE VEGETATION, ETC. MUST NOT BE PLACED BETWEEN CURB AND HYDRANT
2. SOME LOCATIONS APPLY AT EITHER END OF CURB RETURNS.
3. ALL HYDRANTS WHICH ARE PRIVATELY MAINTAINED AND OWNED ARE TO BE PAINTED RED.
4. IN PARKING LOT ISLANDS, HYDRANT TO BE MIN. 3′ IN ALL DIRECTIONS FROM BACK OF CURB.
5. HYDRANTS TO BE CLEAR OF LANDSCAPE & VEGETATION WITHIN A 5′ RADIUS.

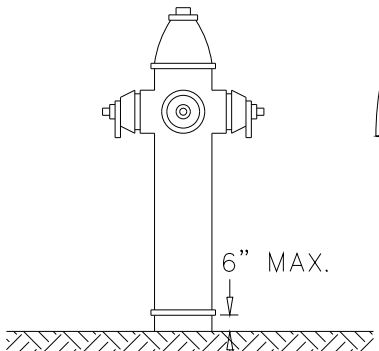

HEIGHT REQUIREMENTS

NOTE: BOTTOM OF FLANGE MAY BE FROM 0" TO 6" MAX. ABOVE GRADE

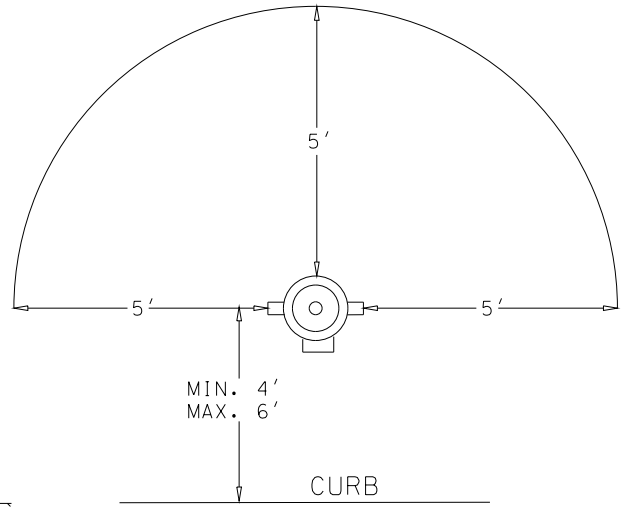

HYDRANT OBSTRUCTION CLEARANCE

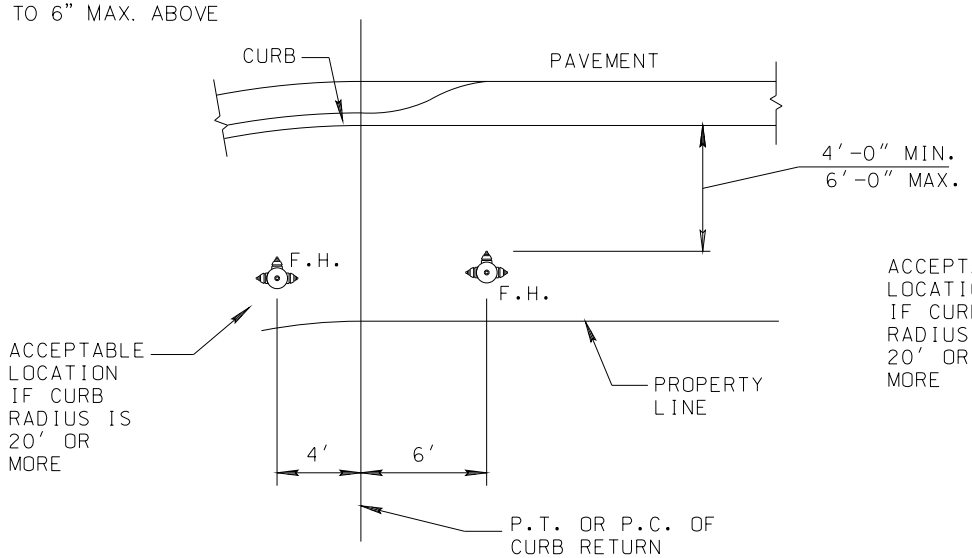

PARKWAY AREA OR NO SIDEWALK

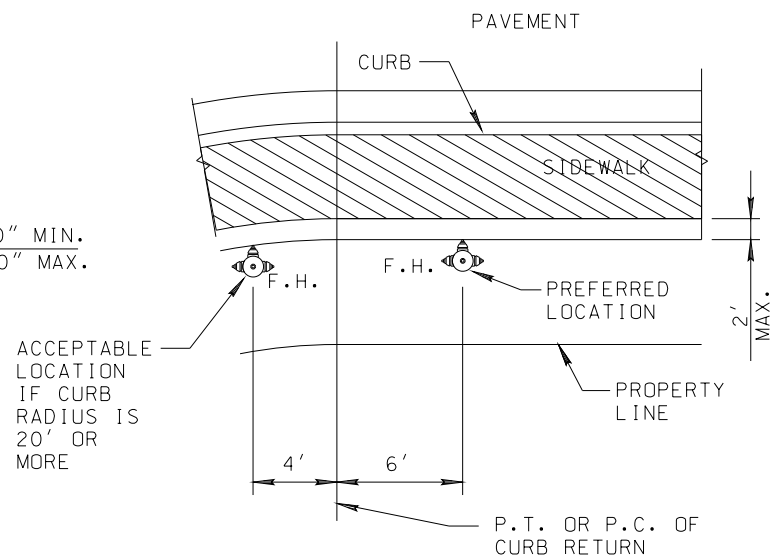

AREA WITH SIDEWALK

REV. 01/09

DETAIL NO.			DETAIL NO.
3-10P	COP STANDARD DETAIL	LOCATIONS FOR NEW FIRE HYDRANTS	3-10P

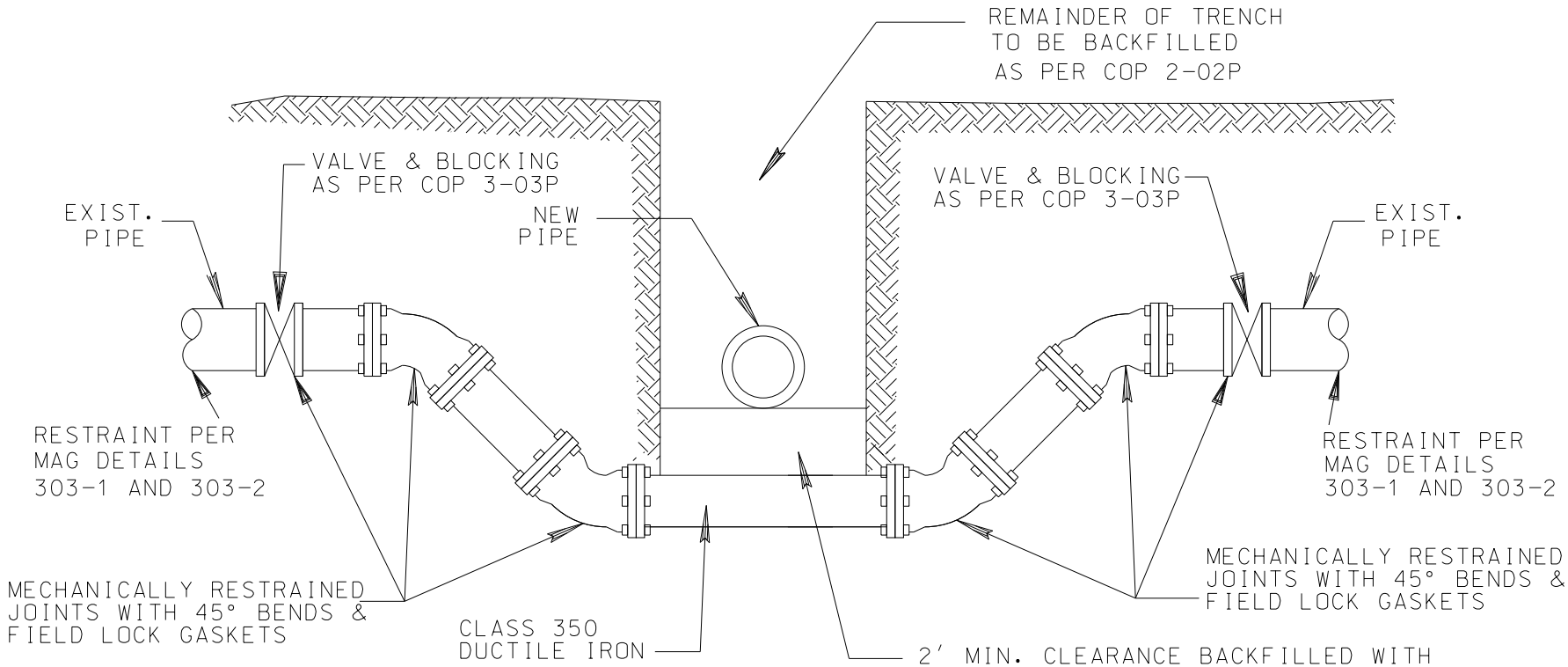

1. NO SERVICE CONNECTIONS SHALL BE LOCATED WITHIN VERTICAL REALIGNMENT

2. AIR RELEASE VALVE TO BE INSTALLED ON THE VERTICAL REALIGNMENT AT THE HIGH POINT OF THE LOW SIDE.

3. TRACER WIRE SHALL BE INSTALLED AS PER COP 3-19P

BOTTOM OF VERTICAL ALIGNMENT SHALL BE ONE PIECE. IF JOINTS ARE REQUIRED, WATER MAIN SEGMENT SHALL BE CENTERED BELOW PIPE OR IN A BORE SLEEVE PER M.A.G. 602. ALL JOINTS SHALL BE FIELD LOCK GASKET & WATER MAIN SHALL BE EQUIPPED WITH STAINLESS STEEL SPACERS & END CAPS.

REV. 01/09

DETAIL NO.			DETAIL NO.
3-11P	COP STANDARD DETAIL	VERTICAL REALIGNMENT OF WATER MAINS	3-11P

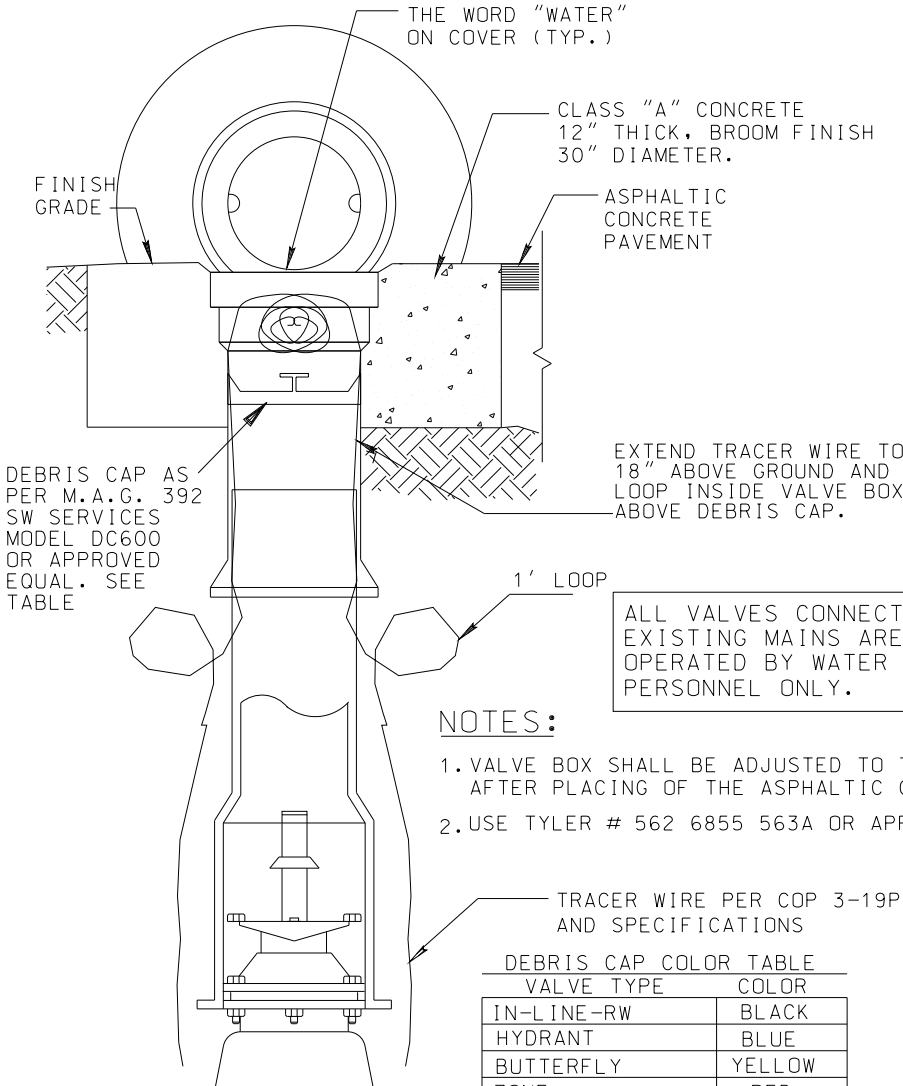

ALL VALVES CONNECTED TO EXISTING MAINS ARE TO BE OPERATED BY WATER AGENCY PERSONNEL ONLY.

NOTES:

1. VALVE BOX SHALL BE ADJUSTED TO THE FINISHED GRADE AFTER PLACING OF THE ASPHALTIC CONCRETE SURFACE.
2. USE TYLER # 562 6855 563A OR APPROVED EQUAL.

DEBRIS CAP COLOR TABLE

VALVE TYPE	COLOR
IN-LINE-RW	BLACK
HYDRANT	BLUE
BUTTERFLY	YELLOW
ZONE	RED
FIRE LINE	WHITE
EFFLUENT	PURPLE
SEWER FORCE MAIN	GREEN

FOR DEEP VALVE SETTING

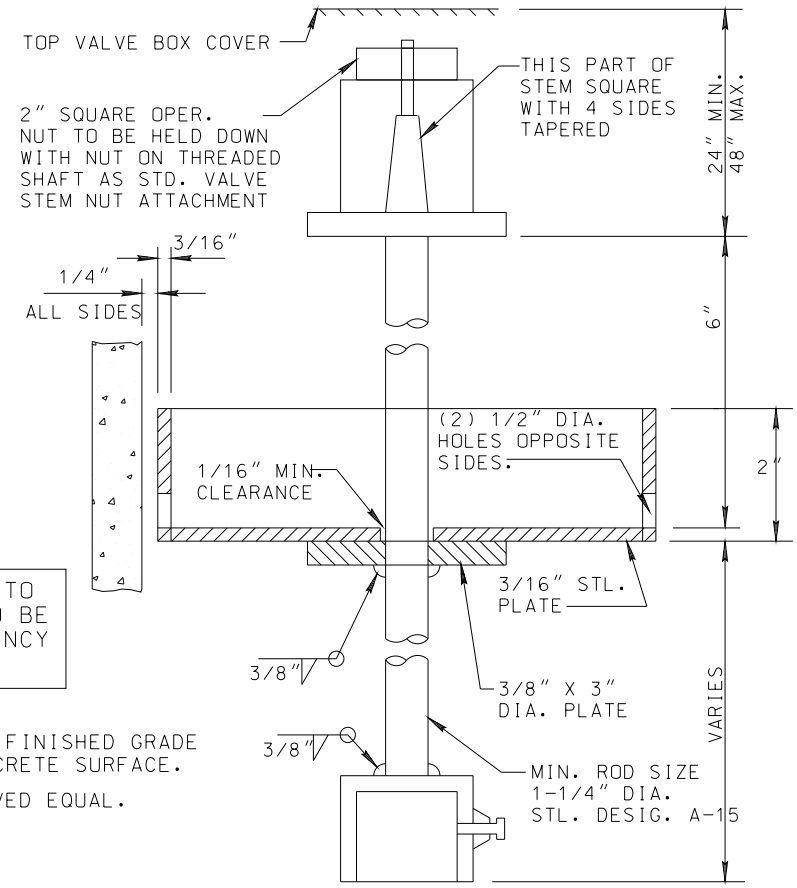

NOTES:

1. EXTENSION OF STEM SHALL BE A MAXIMUM OF 4FT. BELOW GRADE.
2. US MANUFACTURED IRON ONLY.

PAINTING:

ALL STEEL TO HAVE SHOP PRIME COAT ZINC CROMATE, AND ONE HEAVY APPLICATION OF NO-OX-10 "A" IN ACCORDANCE WITH MAUFACTURER'S DIRECTION.

REV. 01/09

DETAIL NO.			DETAIL NO.
3-15P	COP STANDARD DETAIL	VALVE BOX	3-15P

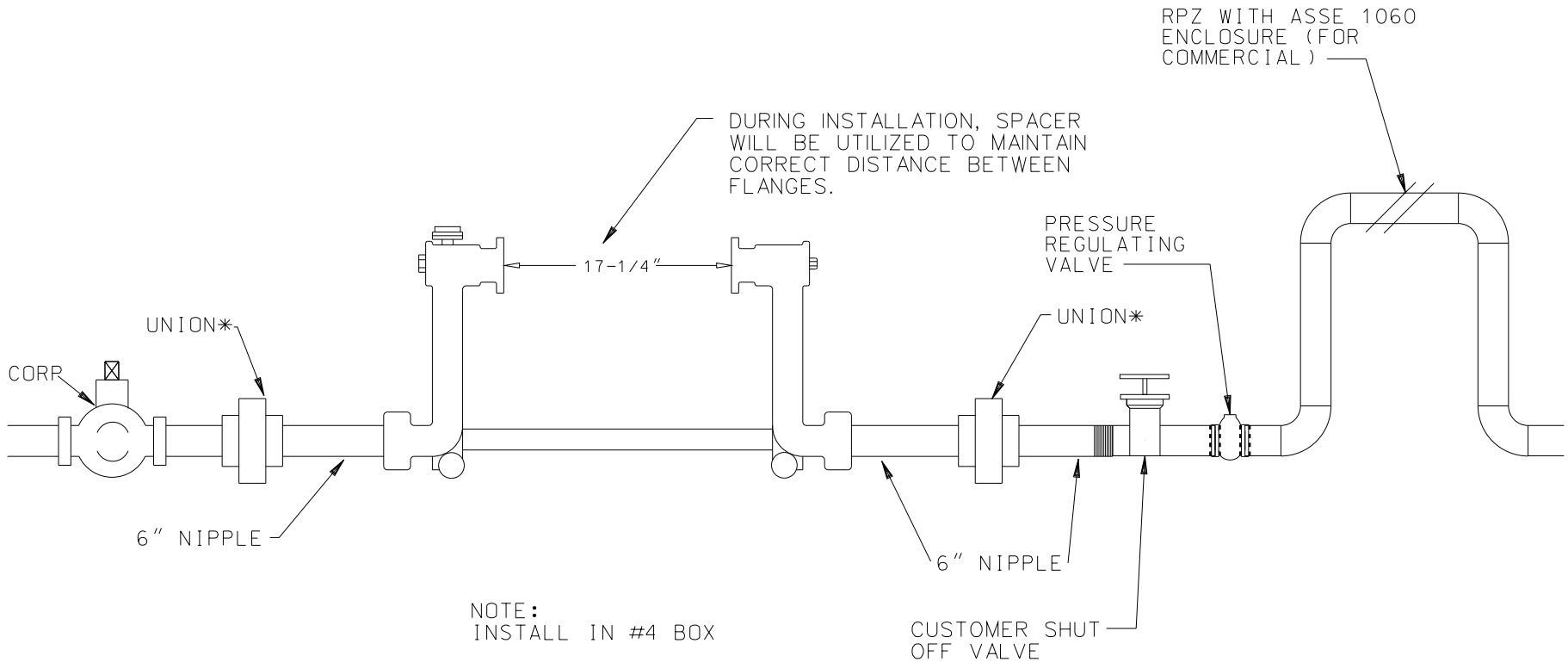

NOTE:
INSTALL IN #4 BOX

* TO AVOID LEAKS USE TEFLON
PASTE ON THREADS ONLY
NFF61 APPROVED

revised 03/09

DETAIL NO.			DETAIL NO.
3-16AP	COP STANDARD DETAIL	2" WATER METER SET	3-16AP

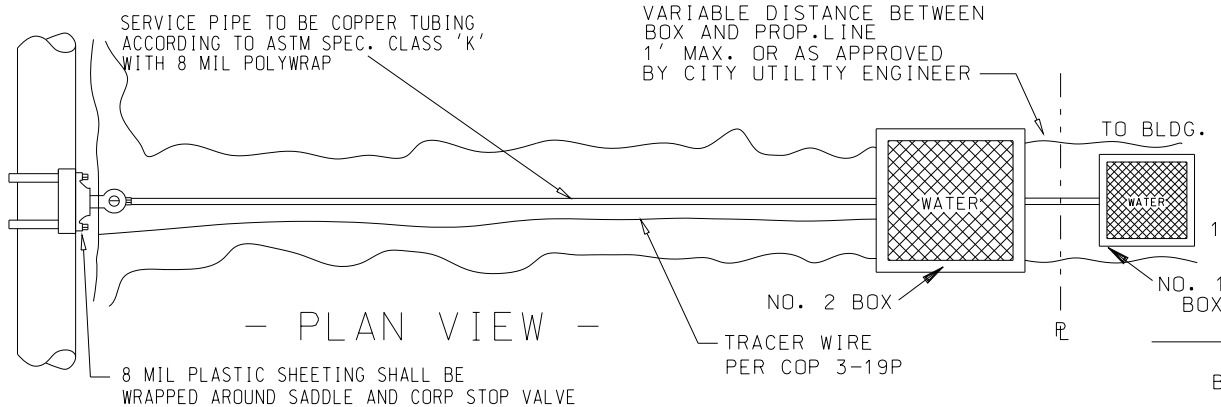

- PLAN VIEW -

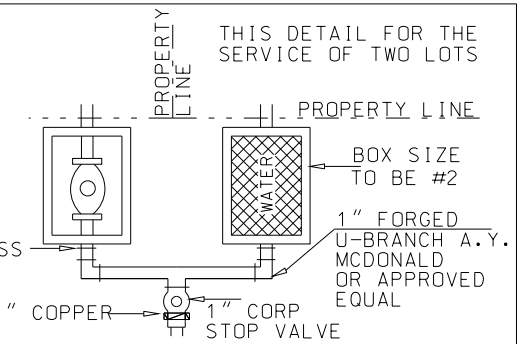

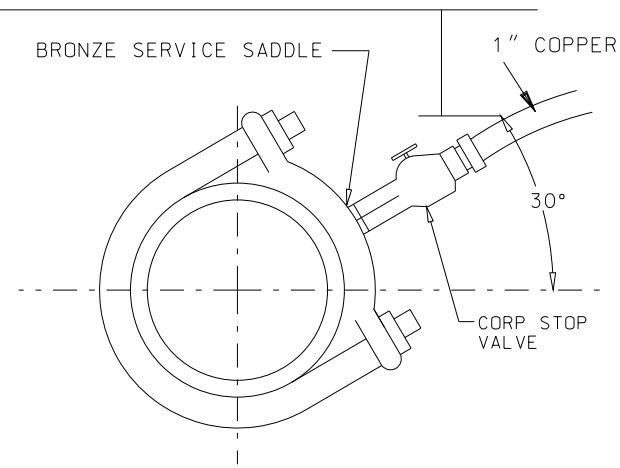

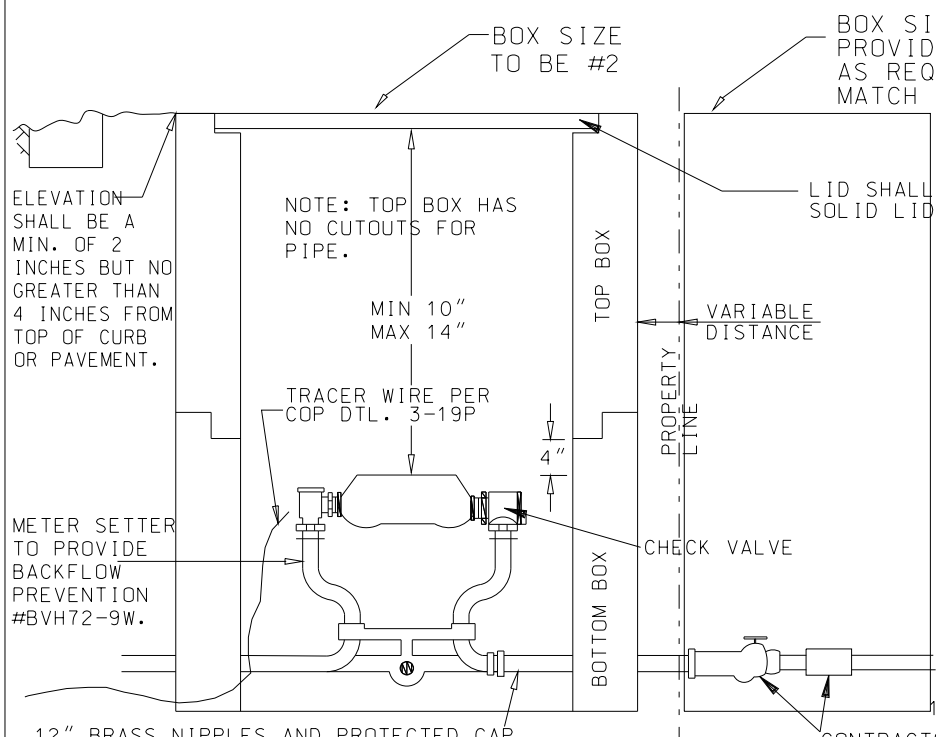

- PROFILE VIEW -

NOTES

1. ALL WATER SERVICE LINES FROM MAIN TO METER SHALL BE MIN. 1" COPPER AND METER SET.
2. A #2 BOX SHALL BE USED FOR ALL 1" & 5/8X3/4" WATER SERVICES.
3. CORP STOP TO BE LOCATED INSIDE METER BOX, FOR ALL SIZE METERS.
4. SERVICE LINE IS TO HAVE MIN. 36" COVER.
5. SERVICE LINE SHALL BE UNSPLICED FROM CORP. STOP AT MAIN TO CORP. STOP AT METER BOX.
6. FOR CUT OR FILL SLOPE METER LOCATIONS, "HILL HUGGER" OR OTHER APPROVED METHOD SHALL BE REQUIRED FOR PROTECTION OF METER SET.
7. METER TO BE INSTALLED BY WATER AGENCY ONLY UPON PROPER APPLICATION AND PAYMENT OF PREVAILING FEES.
8. REFER TO COP DET 2-02P FOR WATER SERVICE BEDDING AND SHADING.
9. WATER SERVICE OR METER BOX SHALL NOT BE LOCATED IN DRIVEWAYS.
10. NO LANDSCAPE FEATURES OR VEGETATION WITHIN 5' OF METER BOXES.

REV. 03/09

DETAIL NO.			DETAIL NO.
3-16P	COP STANDARD DETAIL	WATER SERVICE CONNECTIONS	3-16P

NOTE: COPPER TO BE INSTALLED A MINIMUM 18" BELOW & SLOPED UPHILL FROM THE CORP. STOP TO THE AIR RELEASE VALVE.

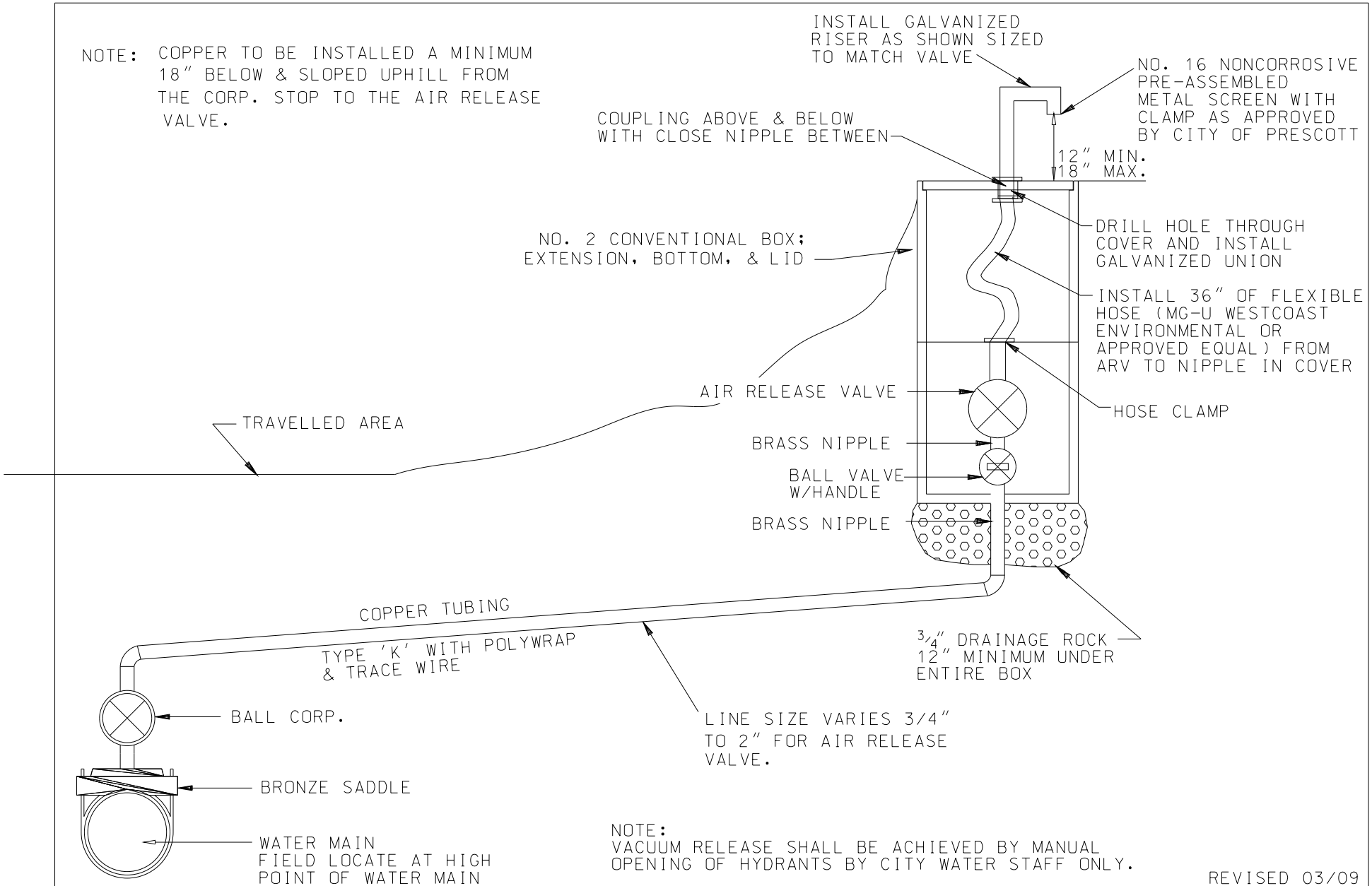

NOTE:
VACUUM RELEASE SHALL BE ACHIEVED BY MANUAL OPENING OF HYDRANTS BY CITY WATER STAFF ONLY.

REVISED 03/09

DETAIL NO.			DETAIL NO.
3-17P	COP STANDARD DETAIL	AIR RELEASE VALVE	3-17P

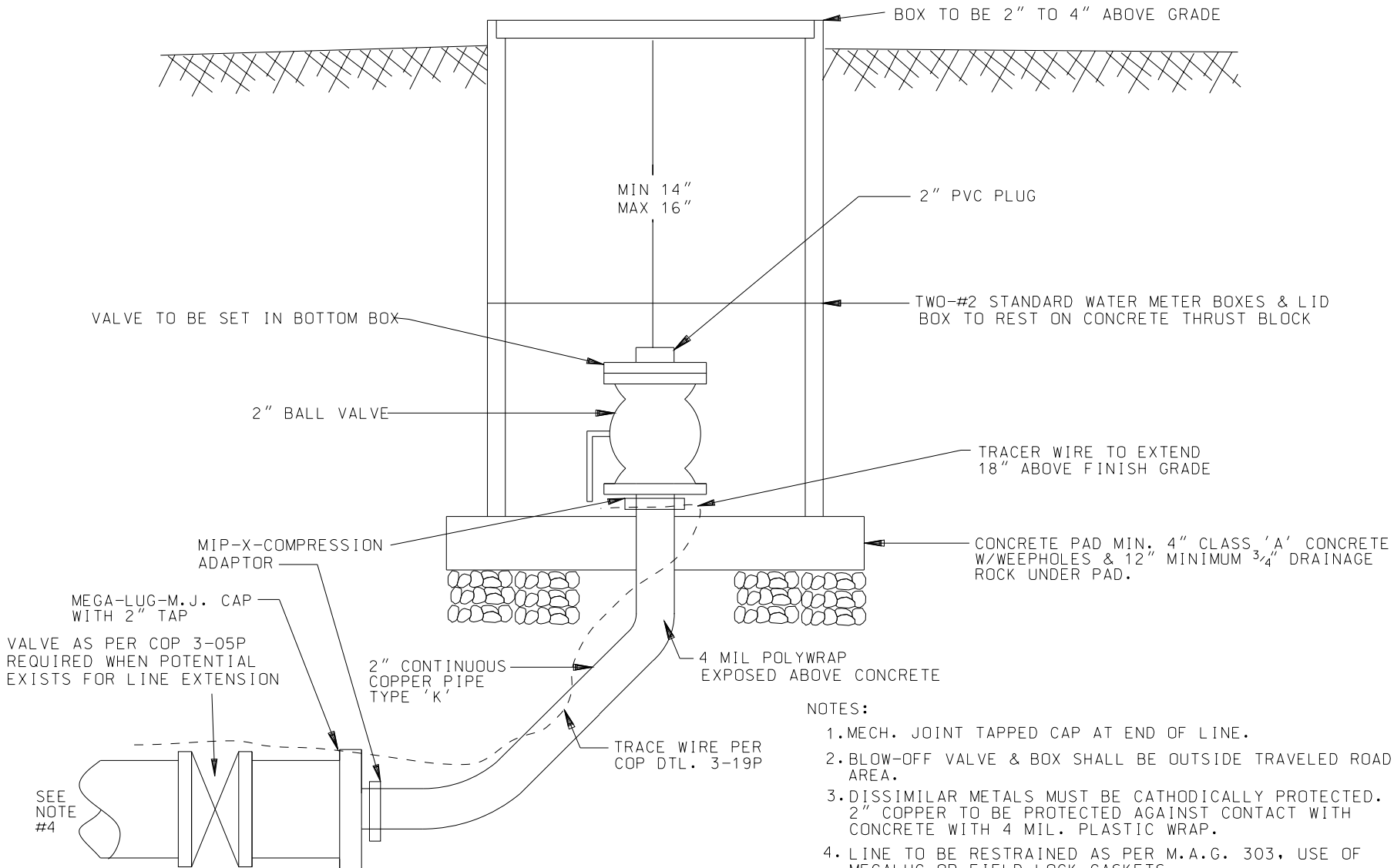

NOTES:

1. MECH. JOINT TAPPED CAP AT END OF LINE.
2. BLOW-OFF VALVE & BOX SHALL BE OUTSIDE TRAVELED ROAD AREA.
3. DISSIMILAR METALS MUST BE CATHODICALLY PROTECTED. 2" COPPER TO BE PROTECTED AGAINST CONTACT WITH CONCRETE WITH 4 MIL. PLASTIC WRAP.
4. LINE TO BE RESTRAINED AS PER M.A.G. 303, USE OF MEGALUG OR FIELD LOCK GASKETS.

revised 03/09

DETAIL NO.			DETAIL NO.
3-18P	COP STANDARD DETAIL	BLOW OFF	3-18P

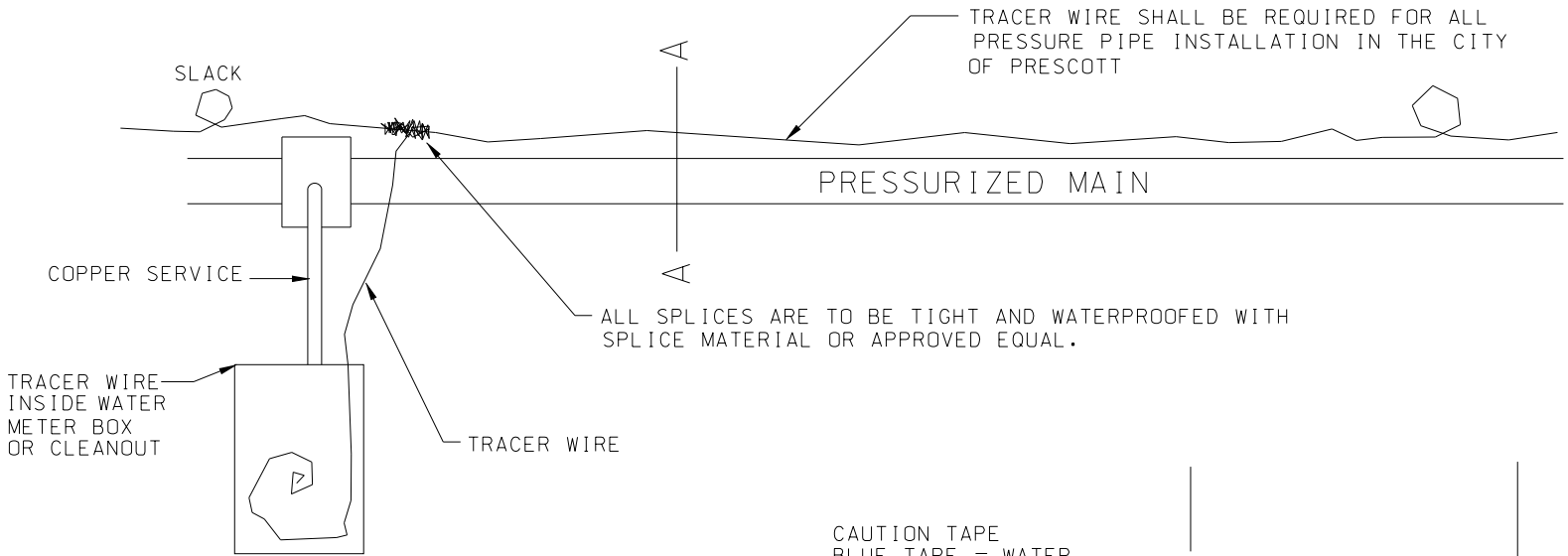

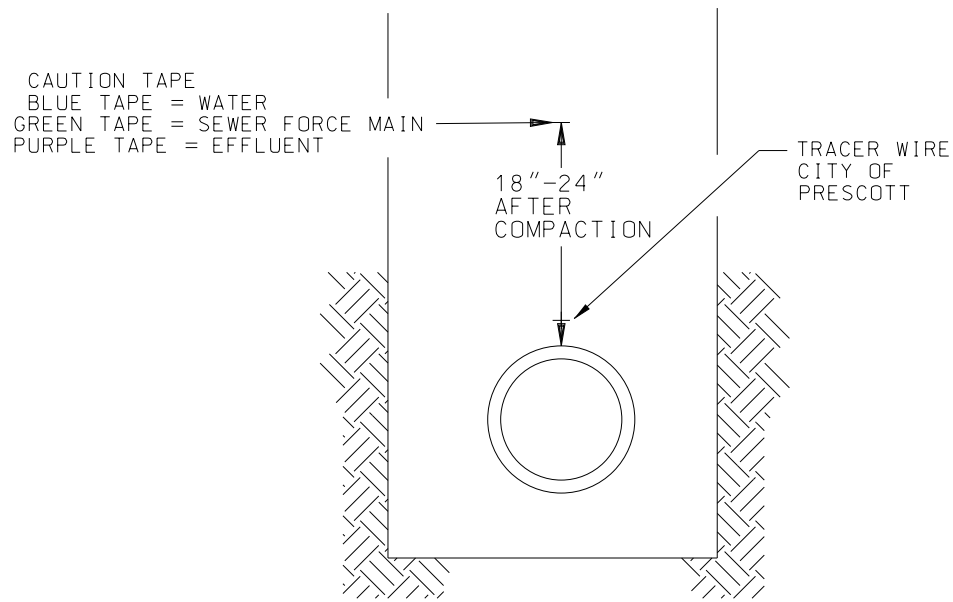

SECT. A-A

NOTES:

1. TRACER WIRE TO BE 14 G DIRECT BURY AWG OR LARGER SOLID COPPER INSULATED WIRE. (BARE COPPER WIRE PROHIBITED)
2. WIRE IS TO BE INSTALLED WITH SLACK, ONE FOOT COIL PER LENGTH.
3. TESTING FOR ACCEPTANCE OF TRACER WIRE WILL BE MADE AT PROJECT COMPLETION.
4. WIRE IS TO BE ATTACHED TO ALL WATER APPURTENANCES.
5. TRACER WIRE IS TO BE PLACED ABOVE PIPE AS INDICATED AND SECURED BY TAPE AS NEEDED.
6. THIS DETAIL DOES NOT PERTAIN TO STRAIGHT RUN GRAVITY SANITARY SEWER MAIN.

THIS DETAIL SHALL NOT BE ALTERED, AND SHALL BE STRICTLY ENFORCED

REV. 01/09

DETAIL NO.			DETAIL NO.
3-19P	COP STANDARD DETAIL	TRACER WIRE FOR ALL PRESSURE PIPE SYSTEMS	3-19P

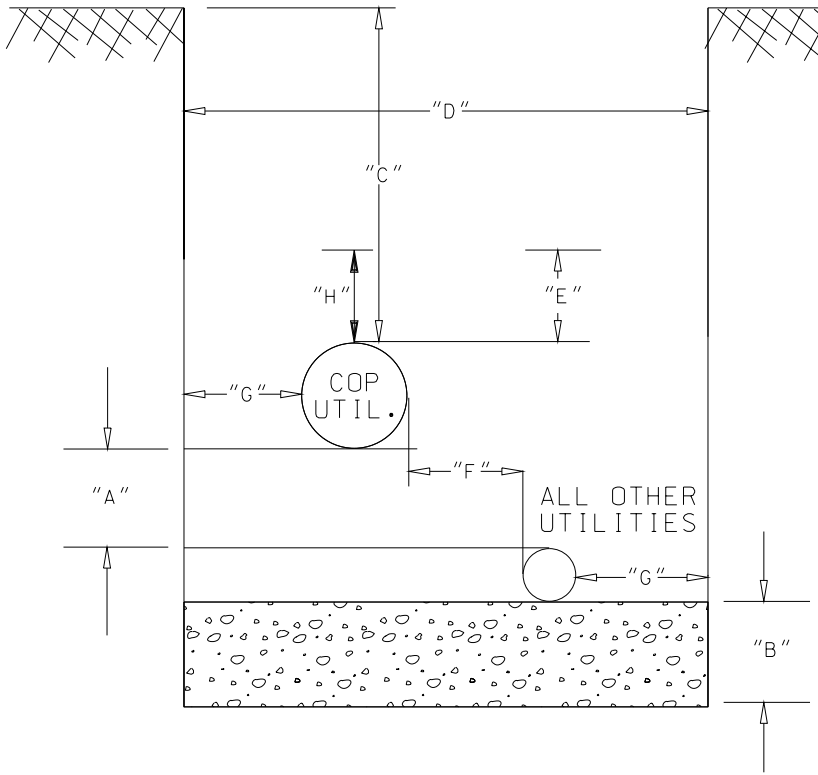

"A" MINIMUM OF 24" VERTICAL CLEARANCE BETWEEN ALL UTILITIES.

"B" 6" BEDDING WILL BE REQUIRED.

"C" MINIMUM OF 36" COVER OVER ALL LINES UNDER 12" DIAMETER.
MINIMUM OF 48" COVER OVER ALL LINES OVER 12" DIAMETER.

"D" MINIMUM OF 30" WIDE.

"E" 12" SHADING OVER TOP OF PIPE. SELECT MATERIAL
(A.B.C. COMPACTED 95% OR SAND).

"F" MINIMUM OF 48" HORIZONTAL CLEARANCE - ALL UTILITIES.

"G" MINIMUM 12" OF SIDE WALL CLEARANCE.

"H" 18"-24" AFTER COMPACTION FOR CAUTION TAPE ABOVE PIPELINE

NOTES:

WATER LINE SHALL BE NO DEEPER THAN 6'
TO THE TOP OF THE PIPE, UNLES SPECIFICALLY
NOTED AND APPROVED BY THE CITY UTILITIES
ENGINEER.

ARTERIAL ROADWAYS WILL REQUIRE 48" MINIMUM
COVER OVER ALL LINES.

REV. 01/09

DETAIL NO.			DETAIL NO.
3-20P	COP STANDARD DETAIL	CITY UTILITY CLEARANCES MULTIPLE UTILITY TRENCH	3-20P

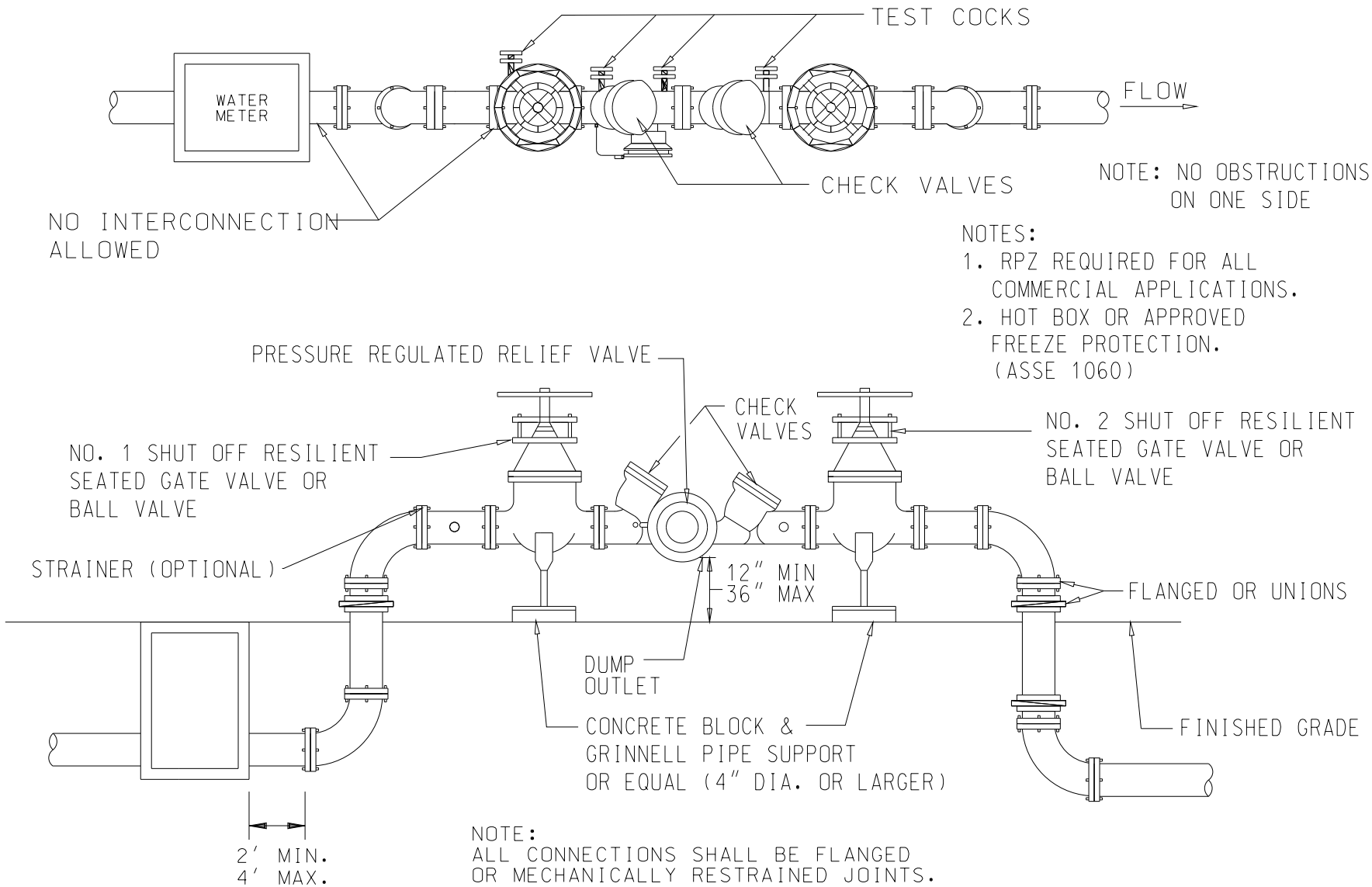

REV. 01/09

DETAIL NO.			DETAIL NO.
3-21AP	COP STANDARD DETAIL	REDUCED PRESSURE ZONE ASSEMBLY INSTALLATION	3-21AP

1. A CORRECT REDUCED PRESSURE ZONE ASSEMBLY (RPZA) INSTALLATION IS SHOWN ABOVE. THERE MUST NOT BE ANY CONNECTIONS ON THE SERVICE LINE BETWEEN THE (RPZA) AND THE WATER METER. PROTECTIVE CAGES ARE OPTIONAL, AND WHEN INSTALLED MUST MEET CLEARANCE REQUIREMENTS IN ADDITION TO PROVIDING SIDE AND TOP ACCESS. CAGES MUST NOT RETAIN WATER.

2. THE ASSEMBLY MUST BE ACCESSIBLE AT ALL TIMES. THE (RPZA) MUST BE INSTALLED ABOVE GROUND. AND AS CLOSE TO THE WATER METER AS POSSIBLE. THE ASSEMBLY MUST BE PROTECTED FROM FREEZING.

3. DISTANCE FROM THE BOTTOM OF PRESSURE RELIEF VALVE TO THE FINISHED GRADE SHALL BE A MINIMUM OF THE TWICE THE DIAMETER OF THE ASSEMBLY PIPING. MINIMUM HEIGHT 12".

4. INSTALLATION MUST MEET UNIFORM PLUMBING CODES IN ADDITION TO STANDARD WATER DETAILS. INSTALLATION MUST BE LEFT EXPOSED UNTIL INSPECTED AND APPROVED BY CITY OF PRESCOTT. IN CASES WHERE WATER SUPPLY MAY NOT BE INTERRUPTED DURING NORMAL WORKING HOURS, TWO ASSEMBLIES INSTALLED IN PARALLEL WILL BE REQUIRED. THE ASSEMBLY MUST BE APPROVED BY THE CITY OF PRESCOTT PUBLIC WORKS DEPARTMENT. FOR AN UPDATED LIST OF APPROVED ASSEMBLIES CONTACT THE CITY OF PRESCOTT UTILITIES DEPARTMENT. THREE SETS OF PLANS SHALL BE SUBMITTED TO THE CITY OF PRESCOTT PUBLIC WORKS DEPARTMENT FOR APPROVAL BY SIGNATURE PRIOR TO INSTALLATION. ADDITIONAL QUESTIONS MAY BE ADDRESSED TO THE CITY OF PRESCOTT PUBLIC WORKS DEPARTMENT.

5. RPZA SHALL BE LOCATED ABOVE GROUND AND ENCLOSED IN AN ASSE 1060 APPROVED ENCLOSURE PER INTERNATIONAL BUILDING CODES

6. RPZA SHALL BE LOCATED WTHIN 2' OF METER.

REV. 01/09

DETAIL NO.			DETAIL NO.
3-21BP	COP STANDARD DETAIL	REDUCED PRESSURE ZONE ASSEMBLY INSTALLATION NOTES	3-21BP

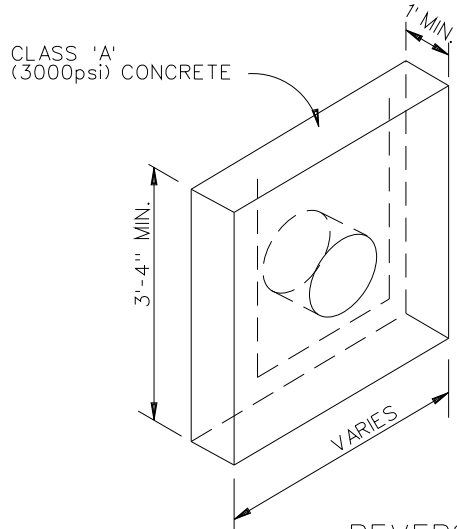

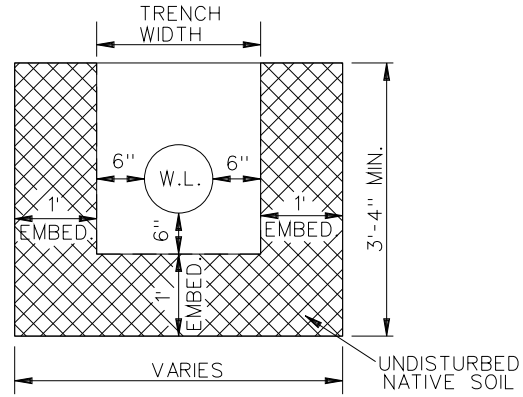

REVERSE THRUST BLOCK DETAIL

NOT TO SCALE

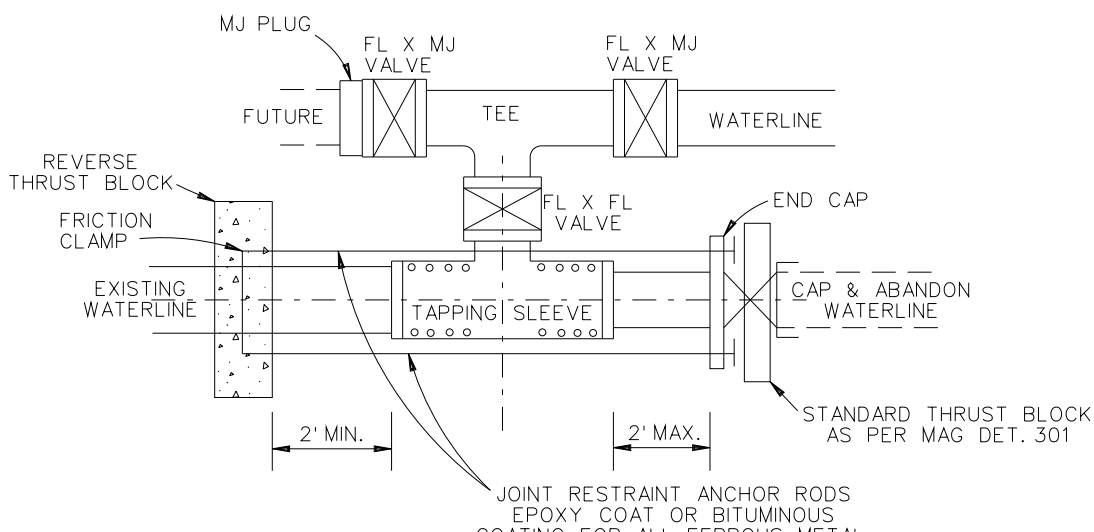

REV. 01/09

DETAIL NO.			DETAIL NO.
380A-P	COP STANDARD DETAIL	REVERSE THRUST BLOCK	380A-P

1. ALL WORK SHALL CONFORM TO MARICOPA ASSOCIATION OF GOVERNMENTS (MAG), YAVAPAI ASSOCIATION OF GOVERNMENTS (YAG) & CITY OF PRESCOTT (COP) MODIFIED YAG CONSTRUCTION STANDARDS & SPECIFICATIONS, WHICH ARE ON FILE IN THE OFFICE OF THE CITY ENGINEER.
2. ALL FRAMES, COVERS, VALVE BOXES, & MANHOLES SHALL BE ADJUSTED TO FINISH GRADE UPON COMPLETION OF PAVING, UTILITY, OR RELATED CONSTRUCTION.
3. ANY QUANTITIES SHOWN ON PLANS ARE NOT VERIFIED BY THE PUBLIC WORKS UTILITIES DIRECTOR.
4. ACCEPTANCE OF THE COMPLETED WORK WILL NOT BE GIVEN UNTIL 3 MIL MYLAR & CAD FORMAT DIGITAL 'AS-BUILT' PLANS ON CITY OF PRESCOTT SURVEY DATUM & COORDINATES HAVE BEEN SUBMITTED BY A REGISTERED PROFESSIONAL ENGINEER AND APPROVED BY THE PUBLIC WORKS DEPARTMENT.
5. CITY OF PRESCOTT PUBLIC WORKS UTILITIES SHALL BE NOTIFIED 24 HOURS PRIOR TO THE START OF ANY WORK.
6. ALL WORK & MATERIALS WHICH DO NOT CONFORM TO THE SPECIFICATIONS ARE SUBJECT TO REMOVAL & REPLACEMENT AT THE CONTRACTOR'S EXPENSE.
7. ANY WORK PERFORMED WITHOUT THE KNOWLEDGE OF THE AGENCY INSPECTOR OR HIS REPRESENTATIVE IS SUBJECT TO REMOVAL & REPLACEMENT AT THE CONTRACTOR'S EXPENSE.
8. THE CONTRACTOR SHALL PROVIDE SUFFICIENT MEN & EQUIPMENT ON THE JOB AT ALL TIMES DURING CONSTRUCTION TO COMPLY WITH SPECIFICATIONS & TO COMPLETE THE WORK.
9. INSPECTION TO BE DONE BY THE CITY OF PRESCOTT PUBLIC WORKS UTILITIES DEPARTMENT OR THEIR REPRESENTATIVE.
10. CONTRACTOR TO NOTIFY PROJECT ENGINEER 72 HOURS (3 WORKING DAYS) IN ADVANCE OF CONSTRUCTION TO SCHEDULE CONSTRUCTION STAKING.
11. THE CONTRACTOR IS TO UNCOVER ALL EXISTING LINES BEING TIED INTO AND VERIFY GRADES & ELEVATIONS BEFORE ANY OTHER CONSTRUCTION.
12. IT IS THE CONTRACTOR'S RESPONSIBILITY TO LOCATE ALL UNDERGROUND PIPELINES, TELEPHONE & ELECTRICAL CONDUITS & STRUCTURES IN ADVANCE OF ANY CONSTRUCTION & OBSERVE ALL POSSIBLE PRECAUTIONS TO AVOID ANY DAMAGE TO SUCH. THE ENGINEER &/OR OWNER WILL NOT GUARANTEE ANY LOCATIONS AS SHOWN ON THESE PLANS, OR THOSE OMITTED FROM SAME.
13. CONTRACTOR SHALL NOTIFY 'BLUE STAKE' AT 1-800-STAKEIT (1-800-782-5348) AT LEAST 48 HOURS PRIOR TO CONSTRUCTION.
14. CONTRACTOR SHALL VERIFY ALL QUANTITIES SHOWN & MAKE HIS BID BASED UPON THOSE VERIFICATIONS. IF ANY DISCREPANCY IN QUANTITIES IS FOUND, THE CONTRACTOR SHALL NOTIFY THE ENGINEER AS SUCH.
15. ARIZONA DEPARTMENT OF ENVIRONMENTAL QUALITY REQUIREMENTS SHALL BE COMPLIED WITH.
16. ARIZONA DEPARTMENT OF ENVIRONMENTAL QUALITY REQUIREMENTS SHALL APPLY WHEN MORE STRINGENT THAN THE MAG OR YAG STANDARD SPECIFICATIONS FOR PUBLIC WORKS CONSTRUCTION.
17. ALL PLANS SIGNED BY THE CITY UTILITY ENGINEER ARE NULL & VOID ONE YEAR FROM DATE OF SIGNATURE IF CONSTRUCTION HAS NOT STARTED.
18. PROJECT ENGINEER SHALL BE RESPONSIBLE FOR SUBMITTING TRAFFIC CONTROL PLANS WHICH SHALL BE MADE A PART OF THE PLAN REVIEW REQUEST TO THE CITY ENGINEER FOR APPROVAL
19. ALL WATER LINES & APPURTENANCES SHALL BE PROVIDED WITH 14 GAUGE AWG, INSULATED, SINGLE STRAND, DIRECT BURY, COPPER TRACE WIRE. TRACE WIRE SHALL BE SUBJECT TO A TRACEABILITY TEST, EASILY ACCESSIBLE, & ANY DEFICIENCIES SHALL BE CORRECTED.
20. WATER-SEWER SEPARATION SHALL BE PURSUANT TO AAC R-18-5-502C.
21. WATER MAINS SHALL BE SUBJECT TO A PRESSURE & LEAKAGE TEST IN ACCORDANCE WITH AWWA C-600 STANDARD.
22. WATER MAINS. SHALL BE DISINFECTED IN ACCORDANCE WITH ADEQ ENGINEERING BULLETIN NO. 8 'DISINFECTION OF WATER SYSTEMS'.
23. OPERATION OF VALVES TO BE DONE BY CITY PERSONNEL ONLY.
24. DUCTILE IRON PIPE TO BE INSTALLED PER MANUFACTURER'S REQUIREMENTS. ALL MATERIALS USED IN THE INSTALLATION OF DUCTILE IRON PIPE SHALL BE PURSUANT TO AAC R-18-4-504.
25. ALL MATERIALS & PRODUCTS THAT COME INTO CONTACT WITH DRINKING WATER OR DRINKING WATER TREATMENT CHEMICALS MUST COMPLY WITH NSF STANDARD 61. ANY 'OR EQUAL' SUBSTITUTION SHALL ALSO MEET NSF STANDARD 61.
26. ALL TRENCHES & BEDDING SHALL BE PER MODIFIED COP DETAILS 2-01P & 2-02P & TECHNICAL SPECIFICATIONS.
27. ALL MATERIALS USED IN THE INSTALLATION OF WATER MAINS SHALL BE PURSUANT TO AAC R-18-4-119, & SHALL BE NSF APPROVED FOR POTABLE WATER.
28. ALL REVISIONS TO ORIGINAL PLANS MUST BE APPROVED BY THE PUBLIC WORKS UTILITIES DIRECTOR PRIOR TO CONSTRUCTION. ANY UNAPPROVED REVISIONS ARE SUBJECT TO REMOVAL & REPLACEMENT AT OWNER'S EXPENSE.
29. ALL DUCTILE IRON, COPPER, & BRASS FITTINGS SHALL BE ENCASED IN POLYETHYLENE PROTECTIVE WRAPPING IN ACCORDANCE WITH MAG SECTION 610.5. UNLESS COUNTERINDICATED BY GEOTECHNICAL REPORT.
30. WATER LINES SHALL BE INSTALLED WITH FIELD LOCK GASKETS & MEGA LUGS WHERE JOINT RESTRAINT IS REQUIRED.
31. WATER SERVICE INTERRUPTION NOTICES SHALL BE GIVEN TO AFFECTED RESIDENTS BY THE CONTRACTOR AT HIS EXPENSE USING A METHOD APPROVED BY THE PUBLIC WORKS UTILITIES DIRECTOR.

REV. 01/09

DETAIL NO.			DETAIL NO.
3-A-P	COP STANDARD DETAIL	WATER PLAN GENERAL NOTES	3-AP

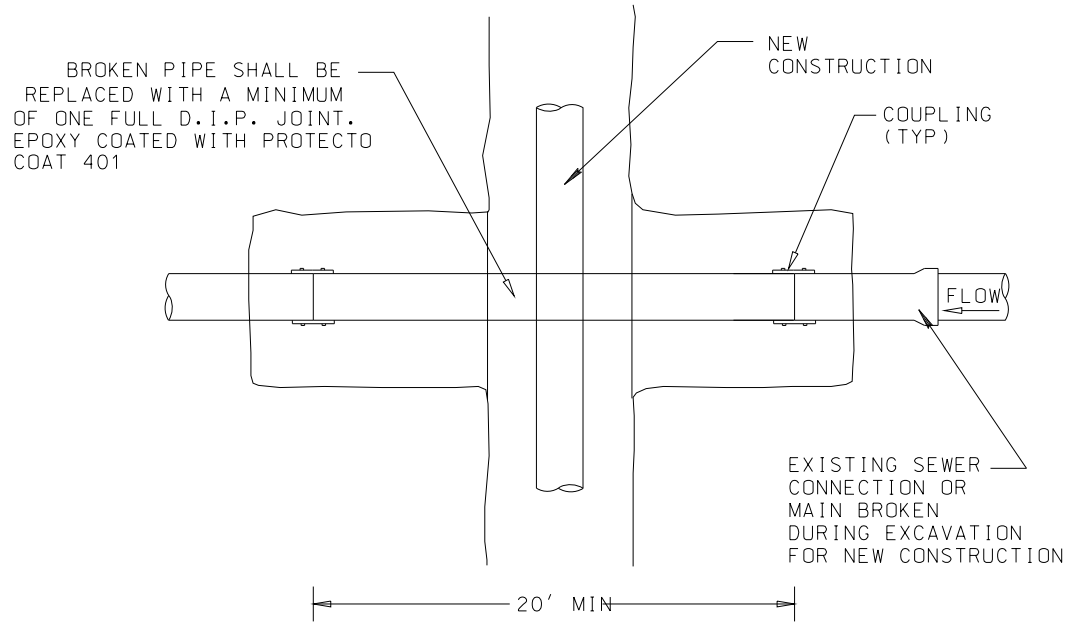

COMPACTION SHALL BE DONE IN ACCORDANCE WITH COP STANDARD DETAIL 2-02P

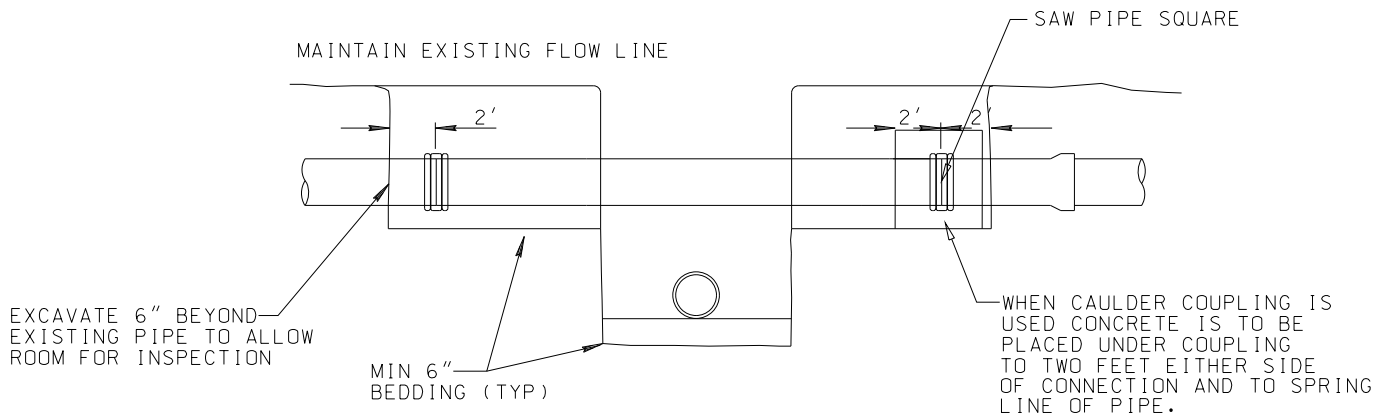

REVISED 03/09

DETAIL NO.			DETAIL NO.
4-02P	COP STANDARD DETAIL	BROKEN SEWER LINE REPLACEMENT	4-02P

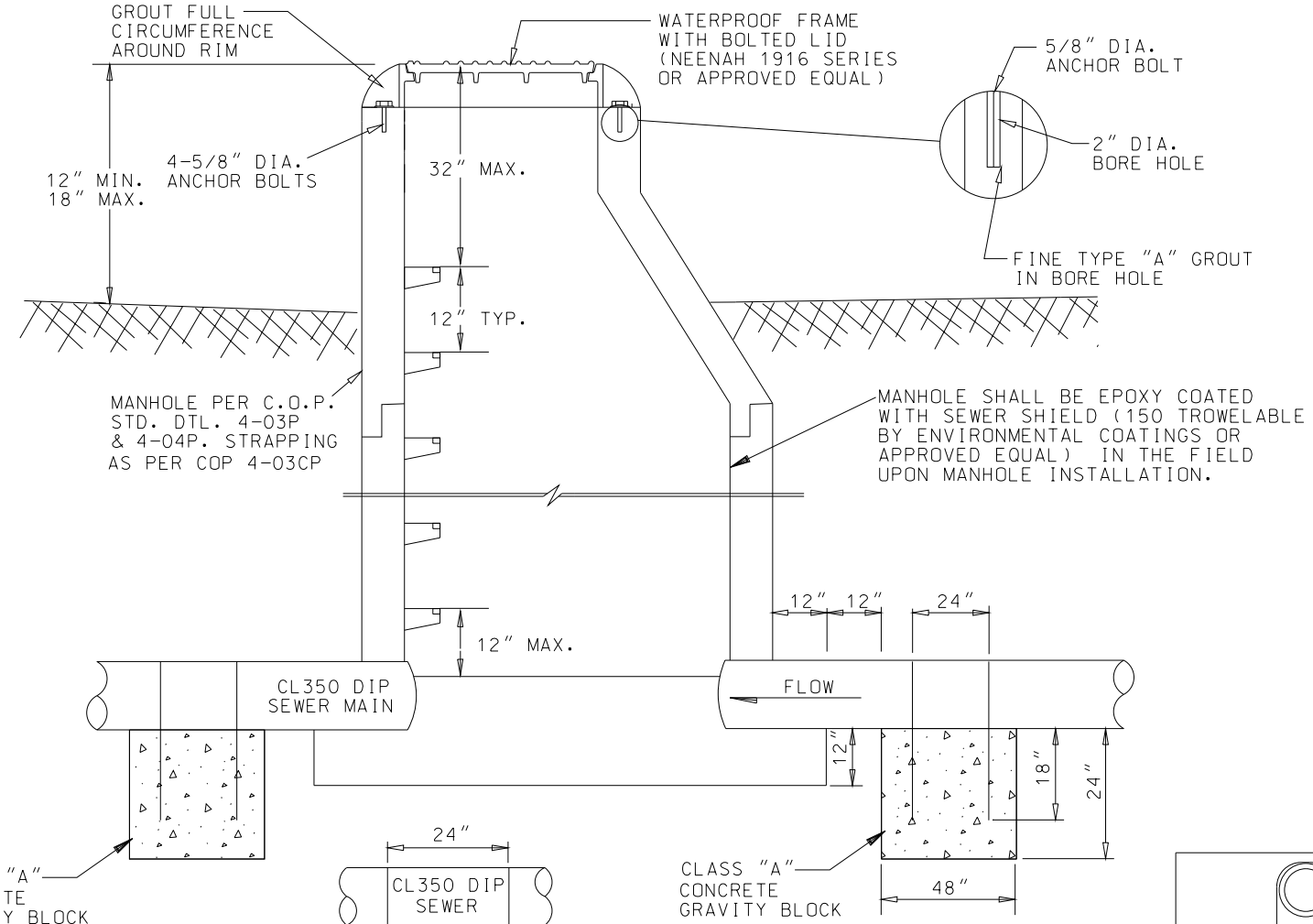

REV. 01/09

DETAIL NO.			DETAIL NO.
4-03BP	COP STANDARD DETAIL	MANHOLE IN DRAINAGEWAYS	4-03BP

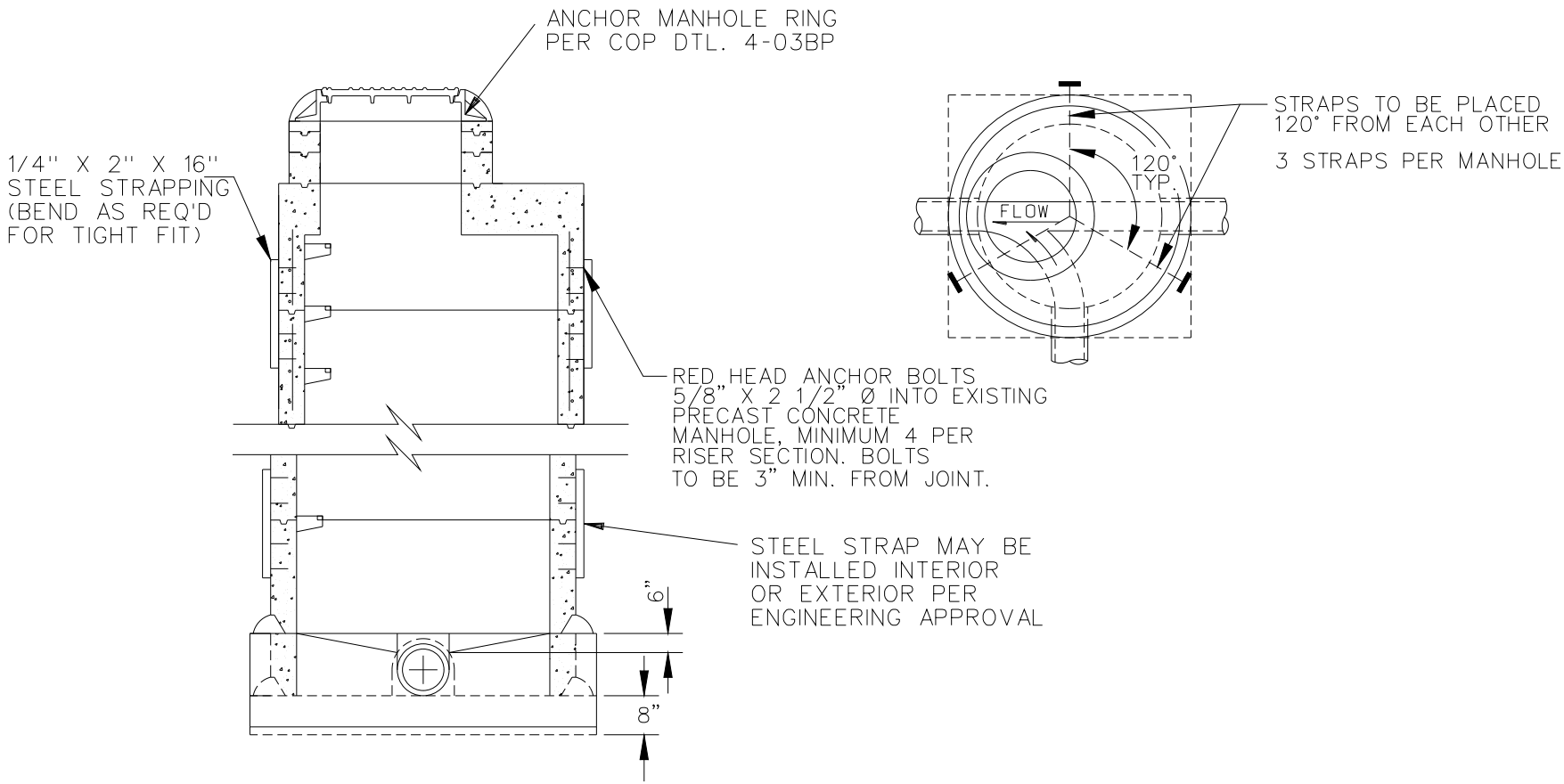

revised 08/08

DETAIL NO.			DETAIL NO.
4-03CP	COP STANDARD DETAIL	MANHOLE EXTERNAL REINFORCING STRAPPING	4-03CP

NOTES:

1. PRE-CAST, REINFORCED M.H. SECTIONS SHALL BE MANUFACTURED IN ACCORDANCE WITH A.S.T.M. C-478M EXCEPT AS MODIFIED BY DETAILS BELOW.
2. M.H. STEPS SHALL BE INSTALLED AT SITE OF M.H. SECTION MANUFACTURE
3. STEPS TO BE LOCATED ON OUTLET SIDE OF MANHOLE.
4. WATER STOPS TO BE USED ON ALL PIPE.
5. ALL CONCRETE TO BE CURED AND PROTECTED (ESP. @ LESS THAN 40°F)
6. GROUT ALL JOINTS TO SMOOTH SURFACE.
7. SEWER TRACE WIRE NOT REQUIRED ON CITY OF PRESCOTT SYSTEM.
8. CONCRETE TESTING SHALL BE SUBMITTED BY THE CONTRACTOR & SUPPLIED BY THE MANUFACTURER.
9. MANHOLES SHALL BE LOCATED AT END OF SEWER LINES.
10. FORCE MAIN DISCHARGE MANHOLES SHALL BE EPOXY LINED AS APPROVED BY THE CITY UTILITIES ENGINEER.

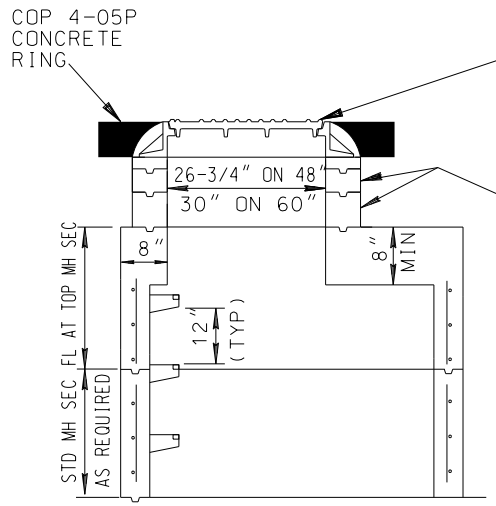

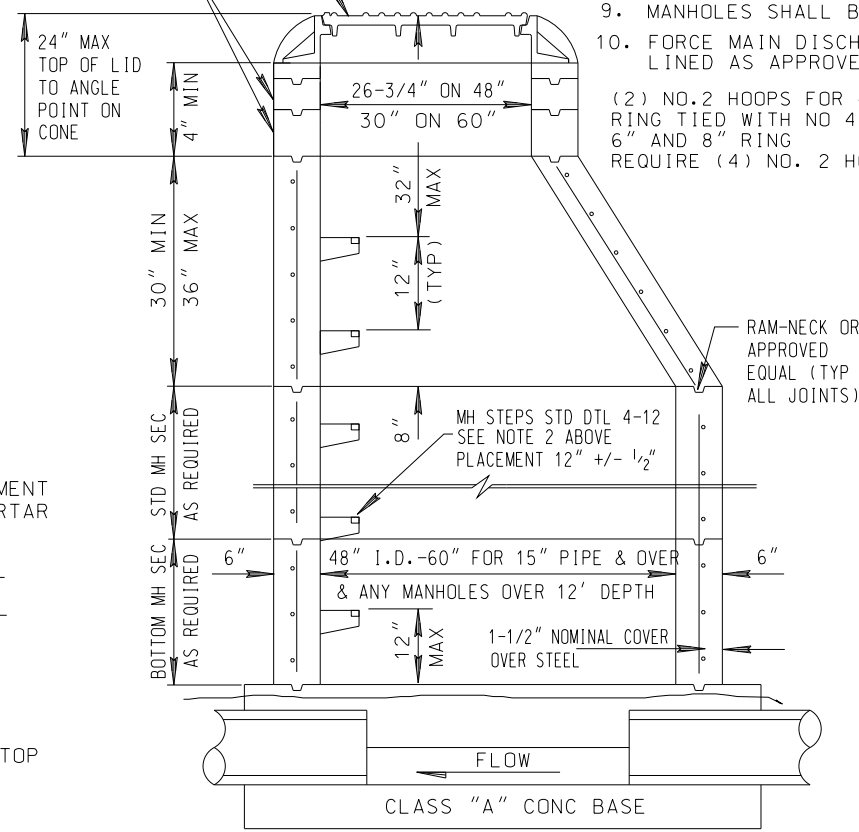

(2) NO.2 HOOPS FOR 4" RING TIED WITH NO 4 WIRE. 6" AND 8" RING REQUIRE (4) NO. 2 HOOPS.

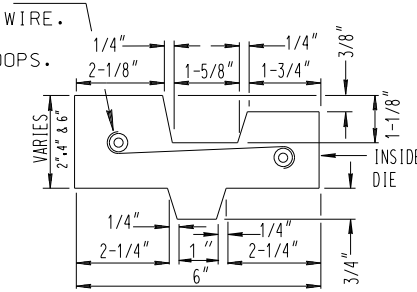

ADJUSTING RING DETAIL

ALTERNATE: FLAT REINFORCED CONCRETE BASE

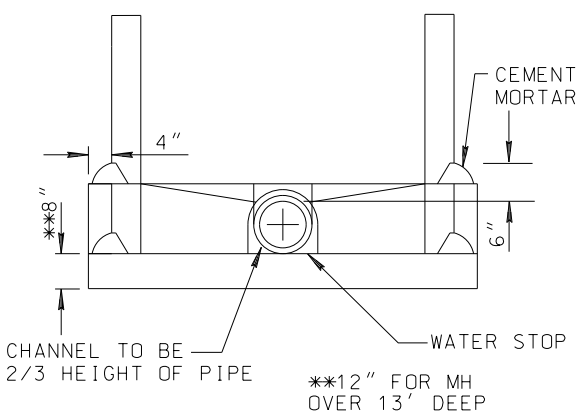

ROUND OR SQUARE BASE OPTIONAL

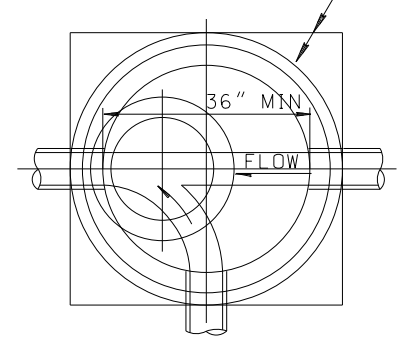

ALTERNATE BASE ** WITH KNOCKOUTS FOR PIPES. CLEARANCE AROUND PIPES = 1" MIN.-3" MAX. EXCEPT LOWER CORNERS.
BASE RING TO BE PLACED OR POURED IN PLACE BASE.

NOTE: ALLOW 72 HOURS FOR BASE TO CURE BEFORE VERTICAL MANHOLE CONSTRUCTION

REV. 01/09

DETAIL NO.			DETAIL NO.
4-03P	COP STANDARD DETAIL	PRECAST CONCRETE SEWER MANHOLE	4-03P

NOTE: 32" MAX FROM RIM TO FIRST STEP.
PER C.O.P. DET 4-03P

NOTES:

1. CONCRETE SHALL NOT BE PLACED ON FROZEN GROUND NOR SHALL IT BE PLACED WHEN THE AMBIENT TEMPERATURE IS BELOW 40° UNLESS SATISFACTORY MEANS HAVE BEEN TAKEN FOR PROTECTING AND INSULATING THE CONCRETE DURING THE CURING PERIOD. ALL CONCRETE SHALL BE PROPERLY PROTECTED FROM FREEZING FOR A PERIOD OF SEVEN DAYS AFTER PLACEMENT AND ALL EXPOSED CONCRETE SURFACES SHALL BE IMMEDIATELY SPRAYED WITH AN APPROVED COLORED CURING COMPOUND.
2. CONCRETE SHALL NOT BE PERMITTED TO FALL FROM A HEIGHT GREATER THAN 6 FEET WITHOUT THE USE OF ADJUSTABLE LENGTH PIPES OR ELEPHANT TRUNKS.
3. HIGH FREQUENCY INTERNAL VIBRATORS SHALL BE USED TO CONSOLIDATE PLACED CONCRETE WITHIN 15 MINUTES AFTER IT IS DEPOSITED IN THE FORMS
4. A MINIMUM OF 2 CYLINDERS SHALL BE TAKEN AT THE EXPENSE OF THE CONTRACTOR FROM EACH TRUCK LOAD OF CONCRETE USED IN MANHOLE. CYLINDER SHALL BE PROPERLY CURED AND TESTED FOR COMPRESSIVE STRENGTH AND TEST RESULTS STAMPED BY A REGISTERED PROFESSIONAL ENGINEER.
5. NO BACKFILLING SHALL TAKE PLACE PRIOR TO THE CONCRETE CURING AT LEAST 72 HOURS. IF HIGH-EARLY CONCRETE IS TO BE USED, TEST RESULTS PROVING A DEVELOPED COMPRESSIVE STRENGTH OF 2500 PSI SHALL BE PROVIDED PRIOR TO BACKFILLING
6. WATER STOPS TO BE USED ON ALL PIPE.
7. INTERIOR SURFACE TO BE SMOOTH AND UNIFORM AND SELF CLEANING.
8. STEPS SHALL BE INSTALLED WITHIN 10 MINUTES OF INITIAL CONCRETE PLACEMENT.

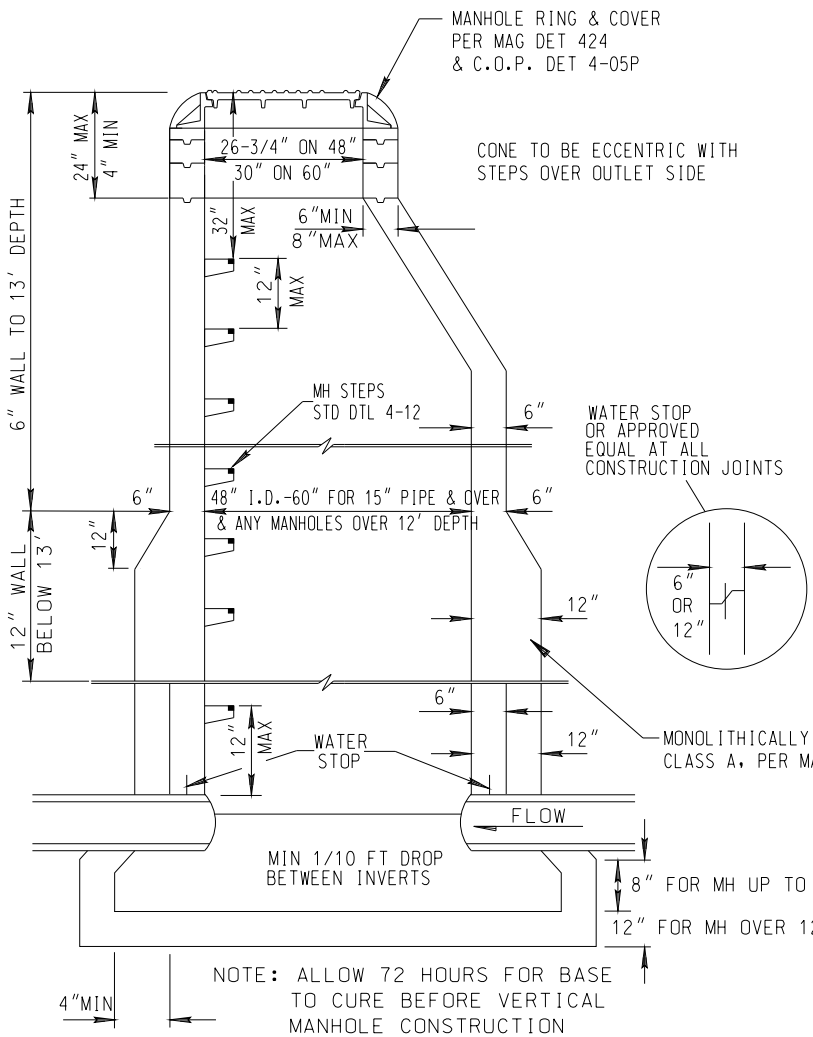

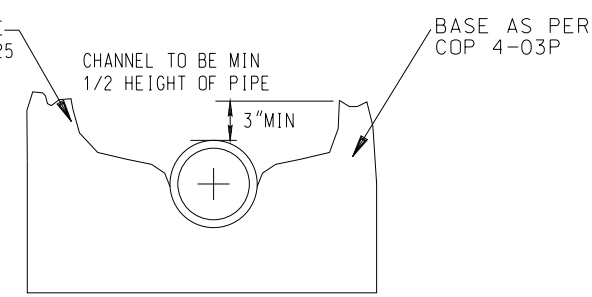

REV. 03/09

DETAIL NO.			DETAIL NO.
4-04P	COP STANDARD DETAIL	CONCRETE SEWER MANHOLE-CAST IN PLACE	4-04P

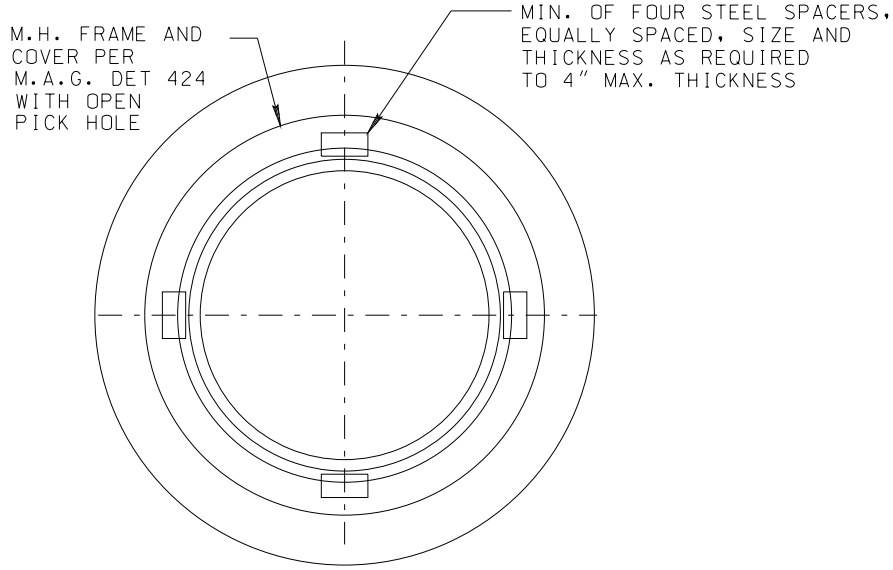

PLAN

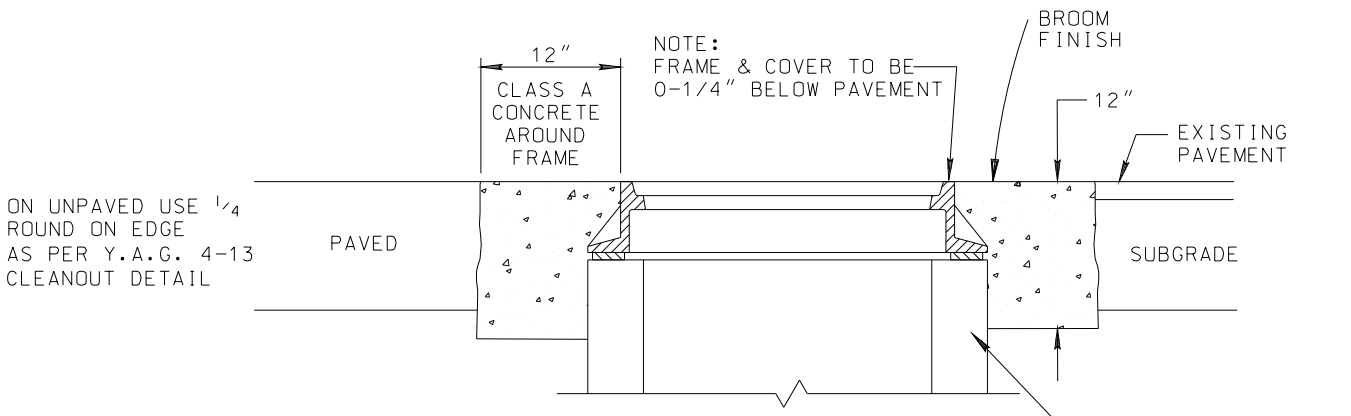

SECTION

NOTE: ALL CONCRETE TO BE CURED FOR 5 DAYS AND INSULATED IF TEMPERATURE IS BELOW 40°F OR AS APPROVED BY THE AGENCY ENGINEER

REV. 01/09

DETAIL NO.			DETAIL NO.
4-05P	COP STANDARD DETAIL	MANHOLE FRAME - GRADE ADJUSTMENT	4-05P

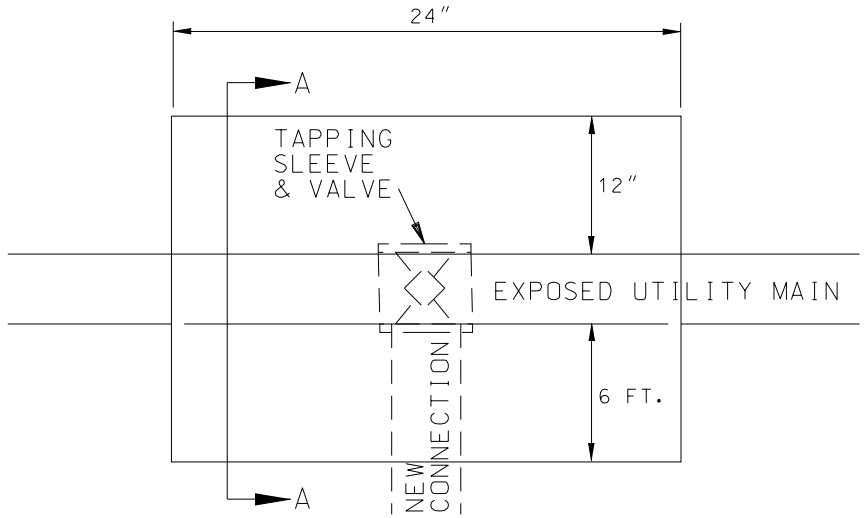

TOP VIEW

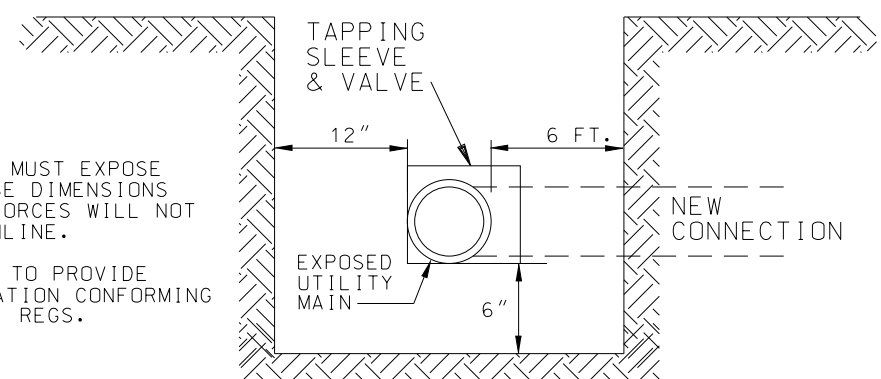

NOTE:
1. CONTRACTOR MUST EXPOSE MAIN TO THESE DIMENSIONS OR UTILITY FORCES WILL NOT TAP THE MAINLINE.

2. CONTRACTOR TO PROVIDE SAFE EXCAVATION CONFORMING TO O.S.H.A. REGS.

SECTION A-A

REV. 01/09

DETAIL NO.			DETAIL NO.
4-14P	COP STANDARD DETAIL	UTILITY MAIN EXPOSURE - NEW SERVICE CONNECTION	4-14P

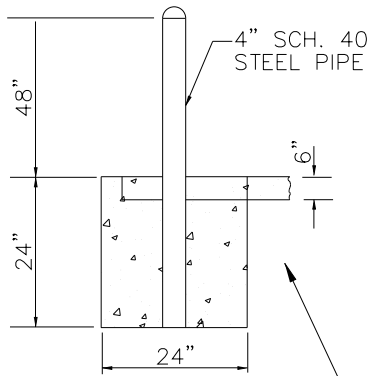

4' HIGH ABOVE PAD

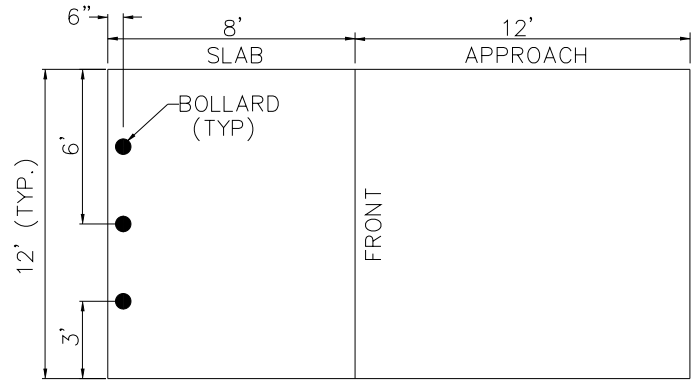

DETAIL "A"

SLAB DATA

1. MIN. 6" THICK CLASS "A" CONCRETE ON 4" A.B.C. 95% COMP. AS PER YAG & MAG 340 & 725
2. SLAB TO BE REINFORCED W/ 6x6 – 8/8 W.W.F.
3. SLAB TO BE POURED TO THE SAME ELEV. AS THE APPROACH.

4' HIGH CONC. FILLED BOLLARD – BURY 2' W/24" COLLAR

6' HIGH BLOCK WALL (OPTIONAL) EXCLUSIVE OF SLAB – REINFORCED W/#5 BARS 12" O.C. EA. WAY.

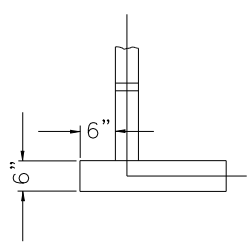

SECTION A–A

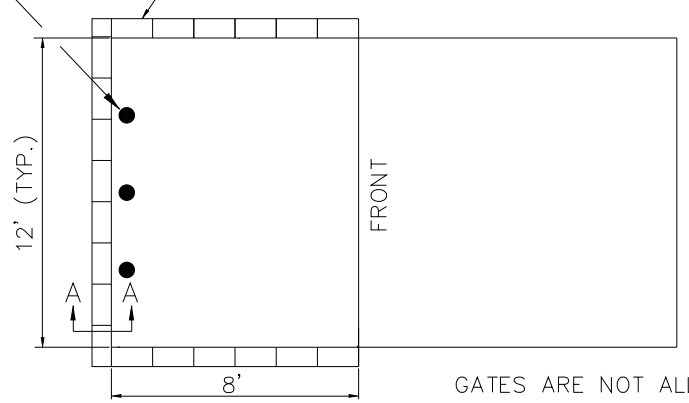

GATES ARE NOT ALLOWED

DETAIL "B"

REV. 01/09

DETAIL NO.			DETAIL NO.
4–15P	COP STANDARD DETAIL	SANITATION DUMPSTER DETAIL	4–15P

RELINER/DURAN, INC
OR APPROVED EQUIVALENT
Drop Bowl U.S. Pat. # 6074130
RELINER U.S. Pat. # 5553973
Additional Patents Pending

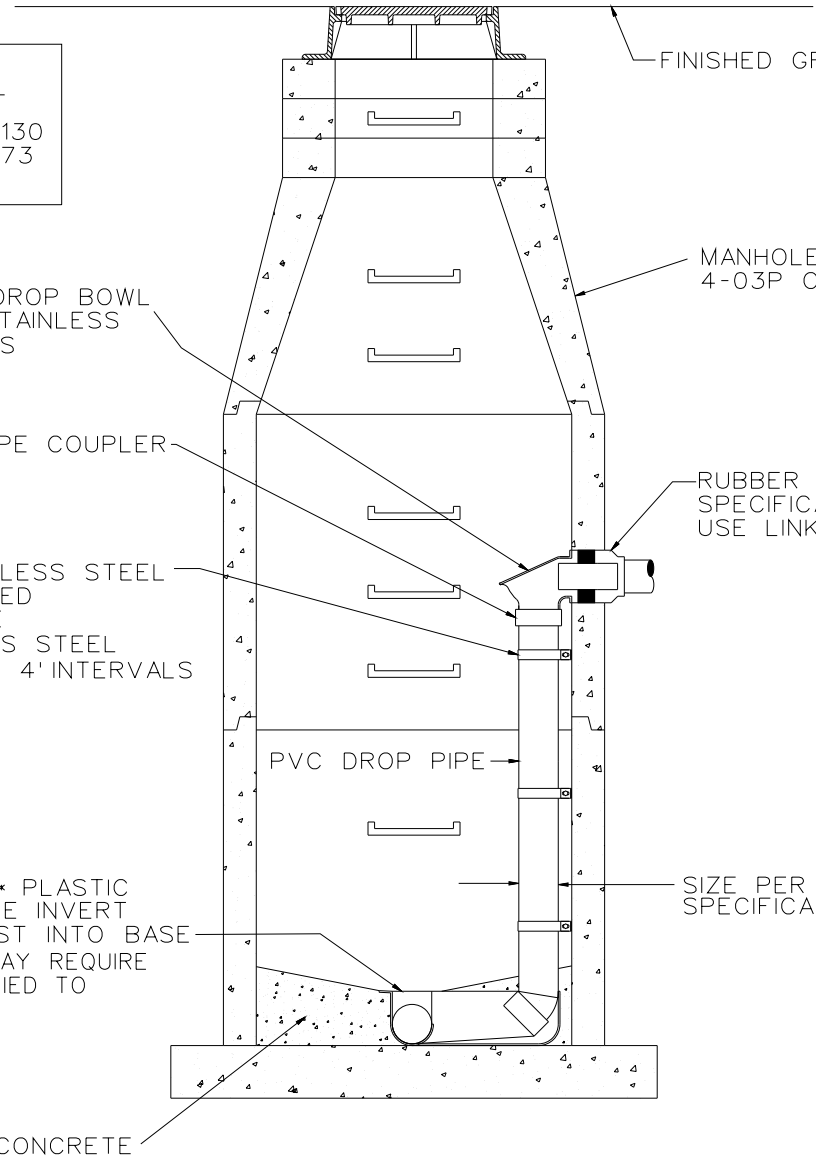

revised 01/09

DETAIL NO.	COP STANDARD DETAIL	INSIDE DROP MANHOLE	DETAIL NO.
426A-P			426A-P

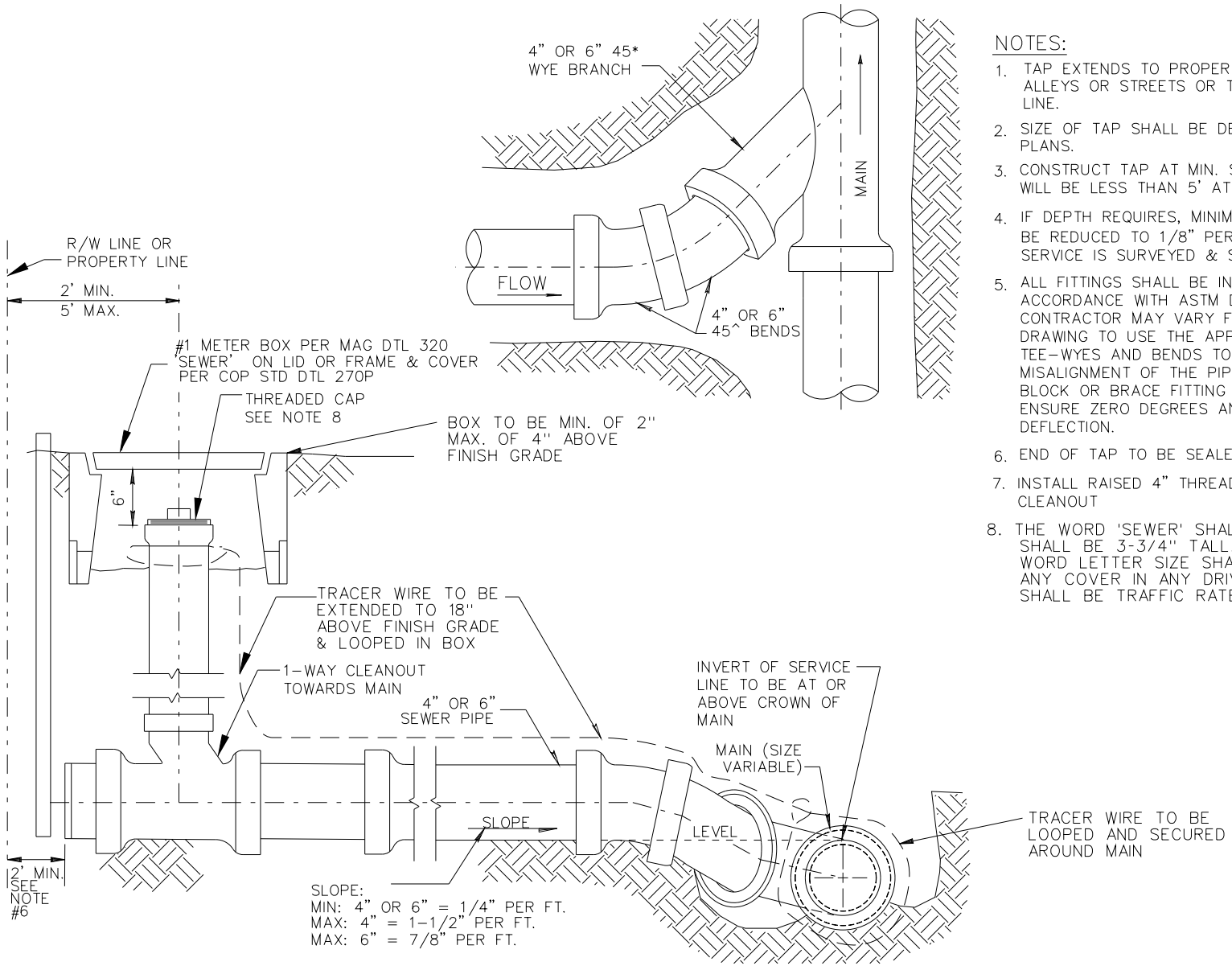

NOTES:

1. TAP EXTENDS TO PROPERTY LINE IN ALLEYS OR STREETS OR TO EASEMENT LINE.
2. SIZE OF TAP SHALL BE DESIGNATED ON PLANS.
3. CONSTRUCT TAP AT MIN. SLOPE IF COVER WILL BE LESS THAN 5' AT PROPERTY LINE.
4. IF DEPTH REQUIRES, MINIMUM SLOPE CAN BE REDUCED TO 1/8" PER FOOT PROVIDED SERVICE IS SURVEYED & STAKED TO GRADE.
5. ALL FITTINGS SHALL BE INSTALLED IN ACCORDANCE WITH ASTM D-2321. THE CONTRACTOR MAY VARY FROM THE DRAWING TO USE THE APPROPRIATE WYES, TEE-WYES AND BENDS TO ENSURE NO MISALIGNMENT OF THE PIPE AND FITTINGS. BLOCK OR BRACE FITTING JOINTS TO ENSURE ZERO DEGREES ANGULAR JOINT DEFLECTION.
6. END OF TAP TO BE SEALED AND MARKED.
7. INSTALL RAISED 4" THREADED PLUG IN CLEANOUT
8. THE WORD 'SEWER' SHALL BE ON COVER & SHALL BE 3-3/4" TALL. THE WIDTH OF WORD LETTER SIZE SHALL BE 5/8" X 3/4". ANY COVER IN ANY DRIVEWAY OR ROADWAY SHALL BE TRAFFIC RATED LID.

DETAIL NO.			REVISED	DETAIL NO.
440-3P	COP STANDARD DETAIL	SEWER BUILDING CONNECTION ONE-WAY CLEANOUT AND METER BOX	REVISED 01/09	440-3P

1. ALL WORK SHALL CONFORM TO MARICOPA ASSOCIATION OF GOVERNMENTS (MAG), YAVAPAI ASSOCIATION OF GOVERNMENTS (YAG) & CITY OF PRESCOTT (COP) CONSTRUCTION STANDARDS & SPECIFICATIONS, WHICH ARE ON FILE IN THE OFFICE OF THE CITY ENGINEER,
2. ALL FRAMES, COVERS, VALVE BOXES, & MANHOLES SHALL BE ADJUSTED TO FINISH GRADE UPON COMPLETION OF PAVING, UTILITY, OR RELATED CONSTRUCTION.
3. ANY QUANTITIES SHOWN ON PLANS ARE NOT VERIFIED BY THE PUBLIC WORKS DIRECTOR.
4. ACCEPTANCE OF THE COMPLETED WORK WILL NOT BE GIVEN UNTIL 3 MIL MYLAR & CAD FORMAT DIGITAL 'AS-BUILT' PLANS ON CITY OF PRESCOTT SURVEY DATUM & COORDINATES HAVE BEEN SUBMITTED BY A REGISTERED PROFESSIONAL ENGINEER AND APPROVED BY THE PUBLIC WORKS DIRECTOR.
5. CITY OF PRESCOTT PUBLIC WORKS DEPARTMENT SHALL BE NOTIFIED 24 HOURS PRIOR TO THE START OF ANY WORK.
6. ALL WORK & MATERIALS WHICH DO NOT CONFORM TO THE SPECIFICATIONS ARE SUBJECT TO REMOVAL & REPLACEMENT AT THE CONTRACTOR'S EXPENSE.
7. ANY WORK PERFORMED WITHOUT THE KNOWLEDGE OF THE CITY OF PRESCOTT INSPECTOR OR HIS REPRESENTATIVE IS SUBJECT TO REMOVAL & REPLACEMENT AT THE CONTRACTOR'S EXPENSE.
8. THE CONTRACTOR SHALL PROVIDE SUFFICIENT MEN & EQUIPMENT ON THE JOB AT ALL TIMES DURING CONSTRUCTION TO COMPLY WITH SPECIFICATIONS & TO COMPLETE THE WORK.
9. INSPECTION IS TO BE DONE BY THE CITY OF PRESCOTT PUBLIC WORKS DEPARTMENT OR THEIR REPRESENTATIVE.
10. CONTRACTOR TO NOTIFY PROJECT ENGINEER 72 HOURS (3 WORKING DAYS) IN ADVANCE OF CONSTRUCTION TO SCHEDULE CONSTRUCTION STAKING.
11. THE CONTRACTOR IS TO UNCOVER ALL EXISTING LINES BEING TIED INTO & VERIFY GRADES & ELEVATIONS BEFORE ANY OTHER CONSTRUCTION.
12. IT IS THE CONTRACTOR'S RESPONSIBILITY TO LOCATE ALL UNDERGROUND PIPELINES, TELEPHONE & ELECTRICAL CONDUITS & STRUCTURES IN ADVANCE OF ANY CONSTRUCTION & OBSERVE ALL POSSIBLE PRECAUTIONS TO AVOID ANY DAMAGE TO SUCH. THE ENGINEER &/OR OWNER WILL NOT GUARANTEE ANY LOCATIONS AS SHOWN ON THESE PLANS, OR THOSE OMITTED FROM SAME.
13. CONTRACTOR SHALL NOTIFY 'BLUE STAKE' AT 1-800-STAKEIT (1-800-782-5348) AT LEAST 48 HOURS PRIOR TO CONSTRUCTION.
14. CONTRACTOR SHALL VERIFY ALL QUANTITIES SHOWN & MAKE HIS BID BASED UPON THOSE VERIFICATIONS. IF ANY DISCREPANCY IN QUANTITIES IS FOUND, THE CONTRACTOR SHALL NOTIFY THE ENGINEER AS SUCH.
15. ARIZONA DEPARTMENT OF ENVIRONMENTAL QUALITY REQUIREMENTS SHALL BE COMPLIED WITH.
16. ARIZONA DEPARTMENT OF ENVIRONMENTAL QUALITY REQUIREMENTS SHALL APPLY WHEN MORE STRINGENT THAN THE MAG OR YAG STANDARD SPECIFICATIONS FOR PUBLIC WORKS CONSTRUCTION; MORE SPECIFICALLY WHERE THEY PERTAIN TO MAXIMUM ALLOWABLE SEWER LINE/PRESSURE SEWER LINE EXFILTRATION-INFILTRATION RATES.
17. ALL PLANS SIGNED BY THE CITY UTILITY ENGINEER ARE NULL & VOID ONE YEAR FROM DATE OF SIGNATURE IF CONSTRUCTION HAS NOT STARTED.
18. PROJECT ENGINEER SHALL BE RESPONSIBLE FOR SUBMITTING TRAFFIC CONTROL PLANS WHICH SHALL BE MADE A PART OF THE PLAN REVIEW REQUEST TO THE CITY ENGINEER FOR APPROVAL
19. WATER-SEWER SEPARATION SHALL BE PURSUANT TO AAC R-18-5-502C.
20. ALL TRENCHES & BEDDING SHALL BE PER COP DETAILS 2-01P & 2-02P & TECHNICAL SPECIFICATIONS.
21. ALL REVISIONS TO ORIGINAL PLANS MUST BE APPROVED BY THE PUBLIC WORKS DIRECTOR PRIOR TO CONSTRUCTION. ANY UNAPPROVED REVISIONS ARE SUBJECT TO REMOVAL & REPLACEMENT AT OWNER'S EXPENSE.
22. SEWER FORCE MAIN LINES SHALL BE DESIGNED AND CONSTRUCTED OF A MATERIAL SUITABLE FOR SANITARY SEWER PRESSURE PIPE AS APPROVED BY THE CITY UTILITIES ENGINEER. SEWER LINES SHALL BE PRESSURE TESTED TO A MINIMUM OF 50 PSI ABOVE DESIGN WORKING PRESSURE AT THE LOWEST POINT IN THE SYSTEM FOR A MINIMUM OF 4 HOURS IN ACCORDANCE WITH AAC R18-9.
23. SEWER LINE LOW PRESSURE AIR TESTS SHALL BE DONE ON 100% OF ALL LINES. TEST EACH SEGMENT OF THE SEWER LINE FOR LEAKAGE USING THE APPLICABLE METHOD BELOW AND RECORD THE RESULTS:
    A.) "STANDARD TEST METHOD FOR INSTALLATION OF ACCEPTANCE OF PLASTIC GRAVITY SEWER LINES USING LOW-PRESSURE AIR, F1417-92(1998)" PUBLISHED BY THE AMERICAN SOCIETY FOR TESTING AND MATERIALS.
24. SEWER MANHOLES EXFILTRATION TESTS SHALL BE DONE ON 100% OF ALL LINES. VACUUM TESTING IN ACCORDANCE WITH 'AGENCY' STANDARDS MAY BE USED IN LIEU OF EXFILTRATION TEST. THE CONTRACTOR SHALL TEST EACH MANHOLE USING ONE OF THE FOLLOWING TEST PROTOCOLS:
    A.) WATERTIGHTNESS TESTING BY FILLING THE MANHOLE WITH WATER. THE CONTRACTOR SHALL ENSURE THAT THE DROP IN WATER LEVEL FOLLOWING PRESOAKING DOES NOT EXCEED 0.0034 OF TOTAL MANHOLE VOLUME PER HOUR.
    B.) NEGATIVE AIR PRESSURE TESTING USING THE "STANDARD TEST METHOD FOR CONCRETE SEWER MANHOLES BY NEGATIVE AIR PRESSURE" (VACUUM) TEST, C1244-02e1(2002), PUBLISHED BY THE AMERICAN SOCIETY FOR TESTING AND MATERIALS. THIS MATERIAL IS INCORPORATED BY REFERENCE & DOES NOT INCLUDE ANY LATER AMENDMENTS OR EDITIONS OF THE INCORPORATED MATERIAL, & MAY BE VIEWED AT THE ARIZONA DEPARTMENT OF ENVIRONMENTAL QUALITY, 1110 W. WASHINGTON, PHOENIX, AZ. 85007, OR OBTAINED FROM THE AMERICAN SOCIETY FOR TESTING & MATERIALS INTERNATIONAL, 100 BAR HARBOR DRIVE, WEST CONSHOHOCKEN, PA. 19428-2959.
25. SEWER LINE DEFLECTION TESTS SHALL BE DONE ON 100% OF ALL LINES.
26. PRIOR TO PROJECT ACCEPTANCE, THE CONTRACTOR SHALL BE RESPONSIBLE FOR PROVIDING THE CITY OF PRESCOTT WITH A VHS VIDEO TAPE OR DVD & A HARD COPY REPORT OF ALL OF THE MAIN LINE INSTALLED WITHIN THE CITY OF PRESCOTT. THE CONTRACTOR SHALL COMPLY WITH THE CITY'S VIDEO ACCEPTANCE PROCEEDURE PRIOR TO PROJECT RELEASE.
27. THE TOTAL LENGTH OF THE SEWER LINE SHALL BE TESTED FOR UNIFORM SLOPE BY LAMP LIGHTING, REMOTE CAMERA, OR SIMILAR METHOD APPROVED BY THE DEPARTMENT AND THE RESULTS RECORDED.
28. COVER EACH SEWER LINE WITH AT LEAST 3 FEET OF EARTH COVER MEETING THE REQUIREMENTS "TRENCH EXCAVATION, BACKFILLING, & COMPACTION" (SECTION 601) REVISED 2004, PUBLISHED BY THE MARICOPA ASSOCIATION OF GOVERNMENTS; & "RIGID PIPE BEDDING FOR SANITARY SEWERS" (WWM 104) REVISED JULY 2002, & "FLEXIBLE PIPE BEDDING FOR SANITARY SEWERS" (WWM 105), REVISED JULY 2002, PUBLISHED BY PIMA COUNTY WASTEWATER MANAGEMENT.
29. PRESSURE SEWER SERVICE LATERALS SHALL BE SUBJECT TO A PRESSURE & LEAKAGE TEST IN ACCORDANCE WITH AWWA-C-600 STANDARD. TEST PRESSURE SHALL BE 100 PSI, OR 50 PSI OVER WORKING PRESSURE, WHICHEVER IS GREATER.

REV. 01/09

DETAIL NO.			DETAIL NO.
4-A-P	C.O.P. STANDARD DETAIL	SEWER PLAN GENERAL NOTES	4-AP