CITY OF PRESCOTT
Everybody's Hometown

Autumn Breeze Street Improvement Project

Project Specifications
and
Contract Documents

DESCRIPTION: This project generally consists of installing a valley gutter, curbcut, grading and drainage ditch and adding inlet wings to the existing catch basin.

SPONSOR: CITY OF PRESCOTT, ARIZONA

PROJECT NUMBER: 16-2157810-8930-16029

BID OPENING: May 12, 2016 at 2:00 PM
Prescott City Council Chambers
201 S. Cortez Street, Prescott, Arizona 86303

PREPARED BY: Public Works Department

April 2016

Table of Contents

SPECIAL NOTICE 5

NOTICE INVITING BIDS 6

INFORMATION FOR BIDDERS 7

BIDDING SCHEDULE 11

SUBCONTRACTORS LIST BID FORM 12

INSTRUCTIONS FOR PREPARING PROPOSAL 13

PROPOSAL 14

BIDDERS AFFIDAVIT 17

INSURANCE REQUIREMENTS 18

CONSTRUCTION CONTRACT 21

CONTRACTOR'S AFFIDAVIT REGARDING SETTLEMENT OF CLAIMS 26

CERTIFICATION OF COMPLETION OF WARRANTIES 26

GENERAL CONDITIONS 27

COMMENCEMENT, PROSECUTION AND PROGRESS 28

- PRECONSTRUCTION CONFERENCE 28
- COMMENCEMENT 28
- PUBLIC NOTICE 28
- SUBCONTRACTORS 29
- CONTRACTOR'S REPRESENTATIVE AND EMERGENCIES 29
- CONTRACTOR AND SUBCONTRACTOR RECORDS 29
- ADDENDA, REVISIONS AND SUPPLEMENTARY DRAWINGS 30
- ERROR AND OMISSIONS 30
- CHARACTER OF WORKMEN 30
- SUSPENSION OF WORK 30
- DELAYS AND EXTENSION OF TIME 31
- PAYMENT FOR DELAY 32
- TERMINATION FOR BREACH OF CONTRACT 32
- METHODS AND EQUIPMENT 32
- DATE OF ACTUAL COMPLETION 32
- FINAL ACCEPTANCE 32
- SAFETY, HEALTH AND SANITATION PROVISIONS 33
- TRAFFIC CONTROL 33
- WATER 33
- PROTECTION OF WORK 34
- CLEANUP AND DUST CONTROL 34
- GUARANTEE OF WORK 34
- CONTINGENCIES 34
- NOTICE AND SERVICE THEREOF 34
- PROJECT MEETINGS 34
- CONSTRUCTION SCHEDULE 35
- ACCIDENT PREVENTION 35
- CONSTRUCTION FACILITIES 36

TEMPORARY FACILITIES 36
WARNING DEVICES AND BARRICADES 36
HAZARDS IN PUBLIC RIGHT-OF-WAY 36
HAZARDS IN PROTECTED AREAS 36
PROTECTION OF EXISTING ITEMS 36
PROJECT SECURITY 36
FIRE EXTINGUISHER 36
OFF-SITE ROADS 36
NOISE ABATEMENT 37
DRAINAGE CONTROL 37
PROJECT CLOSE-OUT 37
WASTE DISPOSAL, GRADING AND MATERIAL STORAGE 37
PROJECT RECORD DOCUMENTS 38

CONTROL OF WORK 38

ABBREVIATIONS 38
AUTHORITY AND DUTIES OF INSPECTOR 39
INSPECTION 39
AUTHORITY OF THE ENGINEER 39
PLANS 39
CONFORMITY WITH PLANS AND ALLOWABLE DEVIATIONS 40
COORDINATION AND INTERPRETATION OF PLANS AND SPECIFICATIONS 40
ORDER OF WORK 40
CONSTRUCTION STAKES, LINES AND GRADES 40
REMOVAL OF UNACCEPTABLE AND/OR UNAUTHORIZED WORK 40
MAINTENANCE DURING CONSTRUCTION 40
COOPERATION BETWEEN CONTRACTORS 40
COORDINATION OF WORK 41
LINES AND GRADES 41

MATERIALS AND WORKMANSHIP 41

GENERAL 41
SUBSTITUTION OF MATERIAL OR EQUIPMENT 42
FABRICATED MATERIALS AND SHOP DRAWINGS 42
MATERIALS FURNISHED BY THE CITY 42
STORAGE AND HANDLING OF MATERIALS 42
REJECTED MATERIALS 42
UTILITIES 42
DRIVEWAYS AND WALKS 42
ROADS AND FENCES 43
TREES AND SHRUBBERY 43
IRRIGATION DITCHES AND STRUCTURES 43
SUBMITTALS 43
MATERIALS AND EQUIPMENT SCHEDULES 43
QUALITY CONTROL 44
SAMPLES AND TESTS 44

LEGAL RELATIONS AND RESPONSIBILITY 44

LAWS TO BE OBSERVED 44
ALIEN LABOR 44
COMPLIANCE WITH FEDERAL AND STATE LAWS 44
EMPLOYMENT PROVISIONS 45
INDEPENDENT CONTRACTOR STATUS 45
NONDISCRIMINATION 45
AMERICANS WITH DISABILITIES ACT 46
PERMITS, TAXES AND LICENSES 46
PATENTED DEVICES, MATERIALS AND PROCESSES 46
SURVEY LAND MONUMENTS 46

PROTECTION OF PERSON AND PROPERTY 46
PROTECTION OF ANTIQUITIES 47
PERSONAL LIABILITY OF PUBLIC OFFICIALS 47
NON-RESPONSIBILITY OF THE CITY 47
NO WAIVER OF LEGAL RIGHTS 47
PROPERTY RIGHTS IN MATERIAL 47

PAYMENT TO CONTRACTORS 47

GENERAL 47
PARTIAL PAYMENT 47
PAYMENT 48
PAYMENT OF ITEMS IN PROPOSAL 48
CHANGES IN THE WORK 49
FORCE ACCOUNT 49
EXTRA WORK 50
CONTRACT AMENDMENT 50
CLAIMS FOR EXTRA WORK 51
PARTIAL ACCEPTANCE OF WORK 52
NOTIFICATION OF CHANGED CONDITIONS, FORMAL PROTEST AND DISPUTE RESOLUTION 52
PUBLICITY RELEASES 53

SCOPE OF WORK 53

ATTACHMENTS:

TECHNICAL SPECIFICATIONS

SPECIAL PROVISIONS

SPECIAL NOTICE

BIDS WILL BE RETURNED UNOPENED IF NOT SUBMITTED PROPERLY SEALED AND PRIOR TO THE TIME SET FORTH IN THE NOTICE INVITING BIDS. ADDENDA SHALL BE ATTACHED INSIDE THE FRONT COVER OF THIS BOOKLET.

BIDS SHALL BE ENCLOSED IN SEALED ENVELOPES, ADDRESSED TO THE CITY OF PRESCOTT AND MARKED ON THE OUTSIDE LOWER RIGHT-HAND CORNER INDICATING:

1. The Bidder's Name;
2. The Project Title;
3. Bid Opening Date and Time;
4. Acknowledgment of Addenda received, if applicable.

BID DOCUMENTS

ALL BIDS MUST BE ACCOMPANIED BY THE FOLLOWING COMPLETED FORMS PROVIDED HEREIN:

1. Bidding Schedule (page 11)
2. Subcontractors List Bid Form (page 12)
3. Proposal (pages 14-16)
4. Bidder's Affidavit (page 17)
5. Bid Security
6. Acknowledgement of Addenda
7. Two (2) Proposed Staging Areas

Failure to complete and sign (where required), and return the above documents with your bid may render it irregular. It is not necessary to return a complete copy of the Notice Inviting Bids, Project Specifications and Contract Documents, other than the forms noted above.

QUESTIONS PERTAINING TO THIS PROJECT PRIOR TO AWARD OF THE CONTRACT SHALL BE DIRECTED TO: City of Prescott, Public Works Department, 433 N. Virginia Street, Prescott, AZ 86301; Phone (928) 777-1130; TDD (928) 777-1100; Fax (928) 771-5929.

NOTICE INVITING BIDS

PROJECT: Autumn Breeze Street Improvement Project

DESCRIPTION: The Autumn Breeze Street Improvement Project scope shall generally include installing a valley gutter, curb cut, grading and drainage ditch and adding inlet wings to the existing catch basin.

BID OPENING: Thursday, May 12, 2016 at 2:00 PM

Sealed bids will be received at the Office of the City Clerk, addressed to the attention of the City Clerk, City of Prescott, 201 S. Cortez Street, Prescott, AZ 86303, before 2:00 PM on May 12, 2016 for furnishing all plant, materials, and labor and performing work for construction of the Autumn Breeze Street Improvement Project.

Bids will be opened and read aloud at the noted date and time in the Prescott City Hall Council Chambers. Any bid received at or after 2:00 PM on the above stated date will be returned unopened. The City of Prescott reserves the right to accept or reject any or all bids, and/or some or all of the alternates bid, and waive any informality deemed in the best interest of the City and to reject the bids of any persons who have been delinquent or unfaithful to any contract with the City of Prescott.

Copies of the Plans, Project Specifications and Contract Documents are available for public inspection at the Public Works Department, 433 N. Virginia Street, Prescott, Arizona, 86301, (Phone: (928) 777-1130; TDD: 777-1100) or on the City's website at http://www.prescott-az.gov/business/bids/. Those interested in having individual sets of the Plans and Documents may obtain them free of charge on the City's website or by payment of $26.00 per set from Public Works, of which cost is non-refundable. An additional fee of $20.00 will be required for mailing, if so desired.

Erika Laster, Contract Specialist
PUBLISHED: 2TC April 24 & May 1, 2016

INFORMATION FOR BIDDERS

PROPOSAL. All standard specifications and details referenced unless otherwise noted shall conform to all the City of Prescott (hereinafter "City") Standard Specifications and Detail Drawings, most current revision, and to the most current edition of the Uniform Standard Specifications and Details for Public Works Construction by the Maricopa Association of Governments, Arizona, including revisions thereto.

ADDENDA. MAG Specifications, Sections 102.1 through 102.13, including: Any Addenda issued during the time of bidding, forming a part of the documents issued to the bidder for the preparation of his bid, shall be covered in the bid and shall be made a part of the contract. Addenda may be issued until noon on the Monday prior to the bid opening date. It is the prospective bidder's responsibility to check for Addenda related to this procurement. Addenda will be posted on the City's website at http://www.prescott-az.gov/business/bids/. Addenda may also be emailed to registered plan rooms and attendees of the mandatory pre-bid meeting, if applicable.

BIDDING REQUIREMENTS AND CONDITIONS. MAG Specifications, Sections 102.1 through 102.13, including: Bids shall be delivered to the office of the City Clerk, City of Prescott, Arizona, before the day and hour set for the submittal of bids in the Notice Inviting Bids as published. Bids shall be enclosed in a sealed envelope bearing the title of the work and the name of the bidder. It is the SOLE responsibility of the bidder to see that his bid is received in proper time. Any bids received after the scheduled closing time for receipt of bids will be returned to the bidder unopened.

IRREGULAR PROPOSALS. MAG Specifications, Section102.7, including: (f) if the bid is mathematically unbalanced, and (g) if the bid is materially unbalanced.

CONFIRMATION OF BID. At any time after the opening of the bids the Public Works Director may require any bidder on the project to confirm such bid in writing prior to contract award. The following certification language shall be submitted as requested by the Public Works Director:

"I, the undersigned hereby certify the prices bid for the Autumn Breeze Street Improvement Project have been reviewed and I hereby confirm work can be completed in accordance with the requirements of the contract documents, plans and specifications in the total bid amount of $ 0.00_____ as stated in the Bidding Schedule."

EXPERIENCE AND QUALIFICATIONS. When requested by the City, the Bidder shall supply a list of all public projects begun within the previous three (3) years prior to contract award. The project list shall contain all public projects entered into by the Bidder and shall include the project name and location, original and final contract amounts, project status and a contact name and information. The Bidder shall provide a description and explanation for any projects that were not completed successfully. Failure to provide complete and factual information may be grounds for rejection of the bid in accordance with City Procurement Code Section 1-27-1.18(K).

SUBCONTRACTORS LIST BID FORM. The Subcontractors List Bid Form must be completed, attached and submitted along with the Bidding Schedule.

BID SECURITY. A certified check, cashier's check or bid bond in the amount of TEN PERCENT (10%) of the bid shall be required at the time the bid or proposal is submitted, in accordance with A.R.S. § 34-201(A)(3).

WITHDRAWAL OF BID. Any bidder may withdraw his bid, either personally, telegraphic, or by written request, at any time prior to the scheduled closing time for receipt of bids.

INTERPRETATION OF PLANS AND DOCUMENTS. MAG Specifications, Section 102.4, including: If any person contemplating submitting a bid for the proposed Contract is in doubt as to the true meaning of any part of the Plans, specifications, or other proposed Contract Documents, or finds discrepancies in or omissions from the Plans or Specifications, he shall submit to the City Public Works Director a written request for an interpretation or correction thereof no later than five working days before bid or proposal opening. The person submitting the request will be responsible for its prompt delivery. Any interpretation or correction of the proposed documents will be made or delivered to each person receiving a set of such documents. Interested bidders may call or visit the office of the City Public Works Director with any questions up to 5:00 PM on the last Thursday prior to the bid opening date. The City will no longer address or interpret any general questions or comments after 5:00 PM on the last Thursday prior to the bid opening date. Comments or questions received after the above referenced time will not be given consideration by the Department. Should any issue be determined significant to the project by the Public Works Director, appropriate action will be taken. Voice: (928) 777-1130; TDD (928) 777-1100.

PRE-AWARD CONFERENCE. The City may require the apparent low bidder to attend a Pre-award conference in order to establish that the Contractor fully understands the scope, complexity and expectations of the project as described in the Contract Documents; to discuss issues, concerns, risk areas and how to minimize them within the bounds of the contract; and to determine that the apparent low bidder is the most responsible and/or most qualified bidder in accordance with City Procurement Code Section 1-27-1.18(K).

The purpose of the Pre-award Conference is to ensure that all participants are apprised of their responsibilities and obligations regarding all applicable laws, rules, regulations and Ordinances contained in the contract documents prior to entering into a contract.

AWARD AND EXECUTION OF CONTRACT. MAG Specifications, Section 103.1 through 103.8, Award of Contract, first paragraph, 103.1, to be revised as follows:

The Contract will be awarded to the lowest qualified bidder complying with these instructions and with the Notice Inviting Bid. The City, however, reserves the right to accept or reject any or all bids if it deems it best for the public good, and to waive any informality in the bids received. The award, if made, will be within sixty (60) calendar days after the opening of bids.

ASSIGNMENT OF CONTRACT. No partial or full assignment by the Contractor of any contract to be entered into hereunder, or any part thereof, or of funds to be received there under by the Contractor, will be recognized by the City unless such assignment has had prior written approval of the City and the surety has been given due notice of such assignment in writing and has consented thereto in writing.

PLANS AND SPECIFICATIONS TO SUCCESSFUL BIDDER. The successful bidder may obtain six (6) sets of Plans and Specifications for this project at no extra cost. If he desires more than the six (6) sets, he may purchase additional sets of Plans and Specifications from the Public Works Director at the cost set forth in the Notice Inviting Bids.

NOTICE TO PROCEED. The Contractor or subcontractor shall not work on any part of the project or incur any expenses or obligations until a Notice to Proceed has been issued by the City. The Notice to Proceed will be sent to the Contractor by first class mail or delivered to him in person.

ASSIGNMENT OF PAYMENTS. MAG Specifications, Section 109.3, including assignment of contract clause included in the "Information for Bidders" in this set of specifications.

NON-PERFORMANCE OF WORK TASKS BY THE CONTRACTOR. If the Contractor fails, neglects, or refuses to perform work tasks necessary for the completion of the total job; replace defective work; to repair or resurface, in a manner that is acceptable to the City and Engineer, public rights-of-way disturbed by his work which are a nuisance, hazard, impedes or endangers vehicular traffic and the public; the City may serve written notice upon the Contractor of its intention to have the work performed by others. Unless, within three (3) calendar days after the service of such notice, the Contractor has made such arrangement and scheduled the accomplishment of said work tasks to the satisfaction of the City and Engineer, the City will proceed to have the work accomplished by others or by itself and deduct the costs thereof from amounts due to the Contractor.

INDEMNIFICATION OF CITY AGAINST LIABILITY. The Contractor shall defend, indemnify and hold harmless the City, its departments, officers, officials, agents, and employees (hereinafter referred to as "Indemnitee") from and against any and all claims, actions, liabilities, damages, losses, or expenses (including court costs, attorneys' fees and costs of claim processing, investigation and litigation) (hereinafter referred to as "Claims") for bodily injury or personal injury (including death), or loss or damage to tangible or intangible property caused, or alleged to be caused, in whole or in part, by the negligent or willful acts or omissions of the Contractor or any of its owners, officers, directors, agents, employees or subcontractors. This indemnity includes any claim or amount arising out of or recovered under Worker's Compensation Law or arising out of failure of such contractor to conform to any federal, state or local law, statue, ordinance, rule, regulation or court decree. It is the specific intentions of the parties that the Indemnitee shall, in all instances, except for Claims arising solely from the negligent or willful acts of Indemnitee, be indemnified by Contractor from and against any and all claims. In consideration of the award of this contract, the Contractor agrees to waive all rights of subrogation against the City, its departments, officers, officials, agents, and employees for losses arising from the work performed by the Contractor for the City.

DEFINITIONS. According to MAG Specifications, Section 101.2, including:

A. AWARD: The formal action of the governing body in accepting a proposal.

B. BID SECURITY: Refers to the certified check, cashier's check, or surety bond, which is required to be submitted with the proposal to insure execution of the contract and the furnishing of the required bonds.

C. CITY: City of Prescott

D. CITY'S REPRESENTATIVE: The authorized representative of the City, which may be an individual or a firm, or his assistants assigned to the project work, the project site, or any part thereof during the performance of the work by the Contractor and until final acceptance.

E. PUBLIC WORKS DIRECTOR: The City of Prescott Public Works Director or his designee, representative or assistants.

F. DESIGN ENGINEER: The firm or person and his properly authorized assistants, designated by the City to prepare Plans and Specifications for the work.

G. NOTICE TO BIDDERS: Refers to the standard forms inviting proposals or bids.

H. MATERIALLY UNBALANCED BID: A bid that generates a reasonable doubt that award to the bidder submitting a mathematically unbalanced bid will result in the lowest ultimate cost to the City.

l. MATHEMATICALLY UNBALANCED BID: A bid containing lump sum or unit bid prices that do not reflect reasonably anticipated actual costs plus a reasonable proportionate share of the bidder's anticipated profit, overhead costs, and other indirect costs.

BIDDING SCHEDULE

Line No.	Item No.	Description	Units	Est Quant.	Unit Price	Total Price
		ROADWAY IMPROVEMENTS				
1	105.8	Construction Staking	LS	1		
2	107.16 SP	Rock Check Dam	EA	2		
3	107.17 SP	Wattles	LF	160		
4	109.1	Mobilization/Demobilization	LS	1		
5	109.11	Contract Allowance	LS	1		
6	215 SP	Earthwork for Open Channels	CY	64		
7	215.1 SP	Ditch Forming	LF	185		
8	220.1 SP	Dumped Rip Rap (D50=8")	CY	20		
9	301	Sub Grade Preparation	SY	38		
10	310 SP	Aggregate Base Course	CY	8		
11	321.13 SP	Asphalt Concrete Pavement(MAG C-3/4" Marshall)	SY	38		
12	340.4.1	Concrete Curb Termination(MAG Std Det 222)	EA	3		
13	340.4.1	Concrete Ribbon Curb(MAG Std Det 220-1TypeB)	LF	20		
14	340.4.2	Concrete Sidewalk (COP Std Det 230P)	SF	168		
15	340.4.4	Concrete Valley Gutter (COP Std Det 240P-1)	SF	152		
16	350.1 SP	Remove Asphaltic Concrete Pavement (Full Depth)	SY	57		
17	350.2 SP	Remove Concrete Sidewalk	SF	168		
18	350.3 SP	Remove Concrete Curb & Gutter	LF	55		
19	350.4 SP	Remove Concrete Catch Basin	LS	1		
20	401	Traffic Control Plan	LS	1		
21	401.2a	Traffic Control Devices	LS	1		
22	401.2c	Incidental Traffic Related Items	LS	1		
23	430.3.2	Seeding (Hydraulic)	AC	0.07		
24	431	Remove & Replace Landscape Rock	LS	1		
25	505.1.1C SP	Concrete Catch Basin (MAG Std Det 533-1, Type D)	EA	1		
26	505.1.1E SP	Concrete Retaining Wall (2.5 ft height)	LF	32		
		Base Bid Improvements Total				

		Add Alternate #1				
27	601.2.11 SP	Rock Excavation for Drainage Construction	CY	1		

_____ Dollars

Base Bid Improvements Total (Written Words)

_____ _____

Signature of Company Official Title

_____ _____

Company Name Phone Number

_____ _____

Address Fax Number

_____ _____

City/State Zip Code

_____

City of Prescott Public Works Department

SUBCONTRACTORS LIST BID FORM

Autumn Breeze Street Improvement Project

	Company Name and License Number	Mailing Address	Phone Number	Bid Item(s)	Total Sub-Contract Amount
1					$
2					
3					
4					
5					
6					
7					
8					
9					
10					
11					
12					
13					
14					
15					
16					
17					
18					
19					
20					
	Total Sub-Contract Amount				**$**

INSTRUCTIONS FOR PREPARING PROPOSAL

Payment for all work performed under this Contract shall be based on the units as shown in the Bidding Schedule. Payment of the bid items as stated in the Contractor's proposal for the completed work, shall be compensation in full for the furnishing of all overhead, labor, materials, devices, equipment and appurtenances included in the work as are necessary to complete the total work under this Contract in a good, neat, and satisfactory manner as indicated on the Plans, as described in the Specifications, and as otherwise implied or required to fulfill the objective of the work. It is the intent of the contract that maximum payment shall not exceed the agreed unit price without duly authorized contract amendments. Each item, fixture, piece of equipment, work, etc., as indicated on the Plans, or specified anywhere in these Documents shall be completed with all necessary connections and appurtenances for the satisfactory use and operation of said item, and the total system or systems.

Any and all patents, license fees, insurance premiums, etc., for the right to use equipment or processes included in this Contract shall be included in the total bid price.

Cost of testing, and other incidental operations, profit and overhead cost, including the cost of supervision, temporary field offices, move-in, move-out, insurance, taxes, equipment not a permanent part of the job, and other incidental items, shall be included in the total bid price.

The "Total Amount of Bid" must be filled out by the bidder. In case of any discrepancy between the price in figures and price in written words, as written or corrected, the price in written words shall be presumed to be correct unless obviously in error, and shall be considered as the Contractor's correct and intended bid.

Bids shall not contain any recapitulations of the work to be done. Alternative proposals will not be considered unless called for. If anyone is in doubt as to the true meaning of any part of the Plans, Specifications, or other Contract Documents, or finds discrepancies in or omissions from the Plans or Specifications, he must submit to the Engineer a written request for an interpretation or correction thereof. The person submitting the request will be responsible for its prompt delivery.

Any interpretation or correction of the Contract Documents will be made only by an Addendum duly issued by the City and a copy of such Addendum will be available on the City's website at http://www.prescott-az.gov/business/bids/. The City will not be responsible for any other explanations or interpretations of the Documents.

If the Proposal is made by an individual, it shall be signed and his full name and address shall be given. If it is made by a partnership, it shall be signed with the partnership name and by a general partner of the firm who shall also sign his own name, and the name and address of each partner shall be given; and, if it is made by a corporation, the name of the corporation shall be signed by its duly authorized officer or officers.

The required forms as requested on page 5 must be completed, attached and submitted along with the Bidding Schedule.

PROPOSAL

Place: _____

Date: _____

Proposal of _____

(Name)

Corporation organized and existing under the laws of the State of Arizona; a partnership consisting

of _____ or an individual trading as

_____.

TO THE HONORABLE MAYOR AND COUNCIL
CITY OF PRESCOTT
PRESCOTT, ARIZONA

Ladies and Gentlemen:

The Undersigned hereby proposes and agrees to furnish any and all required labor, material, construction equipment, transportation, and services for completion of the Autumn Breeze Street Improvement Project.

Project, in strict conformity with the plans and specifications, at the total bid price of:

_____ Dollars

($_____).

The Undersigned hereby declares that he has visited the site and has carefully examined the Contract Documents relating to the work covered by the above bid or bids.

The Bid Security (Certified Check, Cashier's Check, or Bid Bond) attached, payable to the City of Prescott in the sum of not less than ten percent (10%) of the total bid price bid for the complete project, to insure that the undersigned, if his bid is accepted, shall enter into contract and give the bonds and certificates of insurance required. In the event that the contract and bonds and certificates of insurance required are not furnished to the City within the time required, then and in that event the City may retain from the bid bond an amount, not to exceed the amount of the bid bond, representing the difference between the amount specified in the proposal or bid, and such larger amount that the City in good faith contracts with another party to perform the work covered by the proposal or bid.

The project shall be completed within thirty (30) calendar days after the starting date set forth in the NOTICE TO PROCEED.

The undersigned hereby declares, as bidder, that the only persons or parties interested in this PROPOSAL as principals are those named herein; that no elected official or employee of the City is in any manner interested directly or indirectly in this PROPOSAL or in the profits to be derived from the Contract proposed to be taken, other than as permitted by law; that this bid is made without any connection with any other person or persons making a separate bid for the same purpose; that the bid is in all respects fair and without collusion or fraud; that he has read the NOTICE INVITING BIDS

and the INFORMATION FOR BIDDERS hereto attached, and as more fully described in the attached contract and specifications, and agrees to furnish the items and perform the work called for in accordance with the provisions of said form of Contract and the Specifications and to deliver the same within the time stipulated herein, and that he will accept in full payment therefore the total bid price named in this Proposal.

The bidder shall be an A-General Engineering contractor properly licensed at the time of bidding to perform construction in connection with fixed works, including streets, roads, power and utilities plants, dams, hydroelectric plants, sewage and waste disposal plants, bridges, tunnels, and overpasses and shall also be licensed to perform work within residential and commercial property lines, or shall be properly licensed to sub-contract residential or commercial work, as may be required in the Scope of Work.

Any bid submitted without the proper contracting license to perform the required work shall be considered non-responsive and rejected.

The bidder further agrees that, upon receipt of written notice of the acceptance of this PROPOSAL, he will execute the Contract in accordance with the PROPOSAL as accepted and furnish the required bonds TEN (10) days from the date of mailing of said notice of award to him at his address as given below, or within such additional time as may be allowed by the City; and that upon his failure or refusal to do so within said time, then the certified or cashier's check or bid bond accompanying this bid shall be cashed or enforced and the money payable pursuant thereto shall be forfeited to and become the property of the City as liquidated damages for such failure or refusal; provided that if said bidder shall execute the Contract and furnish the required bonds within the aforesaid time, his certified or cashier's check, if furnished, shall be returned to him within three (3) days thereafter, and the bid bond, if furnished, shall become void.

Bidder understands and agrees that the City reserves the right to reject any or all bids and to waive any informality in the bidding.

The bidder agrees that this bid shall be good and may not be withdrawn for a period of sixty (60) calendar days after the scheduled closing time for receiving bids.

Bidder acknowledges receipt of the following Addenda: _____

The undersigned is the holder of Arizona State Contractor's License No(s). and Classification(s):

_____

Respectfully submitted,

_____

Bidder

Corporate Seal

By: _____

Title: _____

Bidder's Contact Information:
Address: _____

Telephone No: _____

Fax No: _____

Email: _____

Names and addresses of all members of the firm or names and titles of all officers of the corporation:

_____

_____

_____

_____

_____

_____

_____

_____

_____

_____

BIDDERS AFFIDAVIT

Autumn Breeze Street Improvement Project

State of _____)
) ss.
County of _____)

_____, being first duly sworn, deposes and says:

That he/she is _____ of _____.
(Title) (Bidder)

who submits herewith to the City of Prescott, Arizona, a proposal:

That all statements of fact in such proposal are true;

That said proposal was not made in the interest of or on behalf of any undisclosed person, partnership, company, association, organization or corporation;

That said bidder has not, directly or indirectly by agreement, communication or conference with anyone attempted to induce action prejudicial to the interest of the City of Prescott, Arizona, or of any bidder or anyone else interested in the proposed contract; and further,

That prior to the public opening and reading of proposal, said bidder:

1. Did not directly or indirectly, induce or solicit anyone else to submit a false or sham proposal;
2. Did not directly or indirectly collude, conspire, connive or agree with anyone else that said bidder or anyone else would submit a false or sham proposal, or that anyone should refrain from bidding or withdraw his proposals;
3. Did not in any manner, directly or indirectly, seek by agreement, communication or conference with anyone to raise or fix the proposal price of said bidder or of anyone else, or to raise or fix any overhead, profit or cost element of his proposal price, or of that of anyone else;
4. Did not, directly or indirectly, submit his proposed price or any breakdown thereof, or the contents thereof, or divulge information or data relative thereto, to any corporation, partnership, company, association organization, bid depository or to any member or agent thereof, or to any individual or group of individuals, except the City of Prescott, Arizona, or to any person or persons who have a partnership or other financial interests with said bidder in his business.

By: _____

SUBSCRIBED AND SWORN to before me by _____

this _____ day of _____, 2016.

_____ _____
Notary Public Commission Expires

INSURANCE REQUIREMENTS

INSURANCE: Contractor and subcontractors shall procure and maintain until all of their obligations have been discharged, including any warranty periods under this Contract are satisfied, insurance against claims for injury to persons or damage to property which may arise from or in connection with the performance of the work hereunder by the Contractor, his agents, representatives, employees or subcontractors.

The insurance requirements herein are minimum requirements for this Contract and in no way limit the indemnity covenants contained in this Contract.

The City in no way warrants that the minimum limits contained herein are sufficient to protect the Contractor from liabilities that might arise out of the performance of the work under this Contract by the Contractor, his agents, representatives, employees, or subcontractors. Contractor is free to purchase such additional insurance as may be determined necessary.

ADDITIONAL INSURANCE REQUIREMENTS: The policies shall include, or be endorsed to include, the following provisions:

1. On insurance policies where the City of Prescott is named as an additional insured, the City of Prescott shall be an additional insured to the full limits of liability purchased by the Contractor even if those limits of liability are in excess of those required by this Contract.
2. The Contractor's insurance coverage shall be primary insurance and non-contributory with respect to all other available sources.

NOTICE OF CANCELLATION: With the exception of a ten (10) day notice of cancellation for non-payment of premium, any changes material to compliance with this contract in the insurance policies above shall require a thirty (30) day written notice.

ACCEPTABILITY OF INSURERS: Insurance is to be placed with insurers with a current A.M. Best's rating of no less than A-VII, unless otherwise approved by the City. General liability, automobile liability, and worker's compensation insurance is to be placed with an insurer admitted in the state in which operations are taking place.

VERIFICATION OF COVERAGE:

A. Contractor shall furnish the City with certificates of insurance (ACORD form or equivalent approved by the City) as required by this Contract. The certificates for each insurance policy are to be signed by a person authorized by that insurer to bind coverage on its behalf.

   All certificates and any required endorsements are to be received and approved by the City before work commences. Each insurance policy required by this Contract must be in effect at or prior to commencement of work under this Contract and remain in effect for the duration of the project and warranty period as set forth in Paragraph 3 of the "Contractor's Affidavit Regarding Settlement of Claims and Certification of Completion of Warranties". Failure to maintain the insurance policies as required by this Contract or to provide evidence of renewal is a material breach of contract.

   All certificates required by this Contract shall be sent directly to the Public Works Department, 433 N. Virginia Street, Prescott, AZ 86301. The City project/contract number and project description shall be noted on the certificate of insurance. The City reserves the right to require complete, certified copies of all insurance policies required by this Contract at any time.

B. MAG Specifications, Sections 103.1 through 103.8, including: Unless otherwise specifically required by the Special Conditions, the minimum limits of public liability and property damage liability shall be as follows:

C. Contractor shall provide coverage with limits of liability not less than those stated below. An excess liability policy or umbrella liability policy may be used to meet the minimum liability requirements provided that the coverage is written on a following form basis.

Commercial General Liability – Occurrence Form –

Policy shall include bodily injury, property damage, broad form contractual liability and XCU coverage.

- General Aggregate $ 3,000,000
- Products – Completed Operations Aggregate $ 3,000,000
- Personal and Advertising Injury $ 1,000,000
- Each Occurrence $ 1,000,000
- Fire Legal Liability (Damage to Rented Premises) (if applicable) $ 100,000

The policy shall be endorsed to include the following additional insured language:

"The Contractor agrees to endorse the City of Prescott as an Additional Insured on the Commercial General Liability with the following Additional Insured endorsement, or similar endorsement providing equal or broader Additional Insured coverage, the CG 2010 10 01 Additional Insured - Owners, Lessees, or Contractors, or CG2010 07 04 Additional Insured – Owners, Lessees, or Contractors – Scheduled Person or Organization endorsement in combination with the additional endorsement of GC2037 10 01 Additional Insured – Owners, Lessees, or Contractors – Completed Operations shall be required to provide back coverage for the contractor's "your work" as defined in the policy and liability arising out of the products-completed operations hazard."

Business Automobile Liability: Bodily Injury and Property Damage for any owned, hired, and/or non-owned vehicles used in the performance of this Contract.

Combined Single Limit (CSL) $ 1,000,000

The policy shall be endorsed to include the following additional insured language:

"The City of Prescott shall be named as additional insured with respect to liability arising out of the activities performed by or on behalf of the Contractor, involving automobiles, owned, leased, hired, or borrowed by the Contractor."

Worker's Compensation and Employer's Liability

Workers' Compensation	Statutory
Employer's Liability	
Each Accident -	$1,000,000
Disease – each employee -	$1,000,000
Disease – policy limit -	$1,000,000

Policy shall contain a waiver of subrogation against the City of Prescott for losses arising from work performed by or on behalf of the Contractor.

Professional Liability (Errors and Omissions Liability) – *if applicable*

Each Claim	$ 1,000,000
Annual Aggregate	$ 2,000,000

1. In the event that the professional liability insurance required by this Contract is written on a claims-made basis, Contractor warrants that any retroactive date under the policy shall precede the effective date of this Contract and that either continuous coverage will be maintained or an extended discovery period will be exercised for a period of two (2) years at the time work under this contract is completed.
2. The policy shall cover professional misconduct or lack of ordinary skill for those positions defined in the Scope of Work of this contract.

   Notice of Cancellation: With the exception of a ten (10) day notice of cancellation for non-payment of premium, any changes material to compliance with this contract in the insurance policies above shall require a thirty (30) day written notice.

D. Such policy shall not exclude coverage for the following:

1. Injury to or destruction of any property arising out of the collapse of/or structural injury to any building or structure due to grading of land, excavation, borrowing, filling, backfilling, tunneling, pile driving, cofferdam work or caisson work.
2. Injury to or destruction of wires, conduits, pipes, mains, sewers, or other similar property or any apparatus in connection therewith, below the surface of the ground, if such injury or destruction is caused by and occurs during the use of mechanical equipment for the purpose of grading of land, paving, excavating, drilling; or injury to or destruction of any property at any time resulting there from.
3. Injury to or destruction of any property arising out of blasting or explosion.
4. Motor vehicle public liability and property damage insurance to cover each automobile, truck, and other vehicle used in the performance of the Contract in an amount of not less than $1,000,000.00 for one person, and $1,000,000.00 for more than one person, and property damage in the sum of $1,000,000.00 resulting from any one accident which may arise from the operations of the Contractor in performing the work provided for herein.

E. The Contractor shall carry and maintain fire and extended coverage with an endorsement for vandalism and malicious mischief in Contractor's name and also in the name of the City in an amount of at least ONE HUNDRED PERCENT (100%) of the Contract amount (if applicable).

F. The Contractor shall secure "all risk"-type builder's risk insurance for work to be performed. Unless specifically authorized by the City, the amount of such insurance shall not be less than ONE HUNDRED PERCENT (100%) of the contract price. Such policy shall include coverage for earthquake, landslide, flood, collapse, or loss due to the results of faulty workmanship, during the contract time and until final acceptance of work by the City (if applicable).

CONSTRUCTION CONTRACT

Autumn Breeze Street Improvement Project

Contract No. **

THIS AGREEMENT, made and entered into this ** day of **, 2016, by and between ** of the city of **, county of **, state of Arizona, hereinafter designated "Contractor", and the City of Prescott, a municipal corporation, organized and existing under and by virtue of the laws of the State of Arizona, hereinafter designated "City".

WITNESSETH: That the said Contractor, for and in consideration of the sum to be paid him by the said City, and of the other covenants and agreements herein contained, and under the penalties expressed in the bonds provided, hereby agrees, for himself, his heir, executors, administrators, successors and assigns as follows:

ARTICLE I - SCOPE OF WORK: The Contractor shall furnish any and all labor, materials, equipment, transportation, utilities, services and facilities, required to perform all work for the construction of the project described as City of Prescott: Autumn Breeze Street Improvement Project and install the material therein for the City, in a good and workmanlike and substantial manner and to the satisfaction of the City through its Engineers and under the direction and supervision of the Public Works Director, or his properly authorized agents and strictly pursuant to and in conformity with the Plans and Specifications prepared by the engineers for the City, and with such written modifications of the same and other documents that may be made by the City through the Public Works Director or his properly authorized agents, as provided herein.

ARTICLE II - CONTRACT DOCUMENTS: The Notice Inviting Bids, Plans, Technical Specifications, Special Provisions, Addenda, if any, Proposal and Insurance Requirements as accepted by the Mayor and Council per Council Minutes of **, 2016, Performance Bond, Payment Bond, Bid Bond, Certificate of Insurance and Contract Amendments, if any, are by this reference made a part of this Contract to the same extent as if set forth herein in full.

ARTICLE III - TIME OF COMPLETION: The Contractor hereby agrees to commence work on or before the tenth (10th) day after written notice to do so, and to fully complete the same within thirty (30) calendar days after the date of the written notice to commence work, subject to such extensions of time as are provided by the General Conditions.

ARTICLE IV - COMPENSATION: Contractor shall be paid, pursuant to the provisions as set forth in the Contract documents, the total sum of ** Dollars ($**), plus any approved contract amendments, for the full and satisfactory completion of all work as set forth in the Project Specifications and Contract Documents. Retention shall be in accordance with A.R.S. § 34-221.

ARTICLE V - CONFLICT OF INTEREST: Pursuant to A.R.S. § 38-511, the City may cancel this contract, without penalty or further obligation, if any person significantly involved in initiating, negotiation, securing, drafting or creating the contract on behalf of the City is, at any time while the contract or any extension of the contract is in effect, an employee or agent of any other party to the contract in any capacity or a consultant to any other party of the contract with respect to the subject

matter of the contract. In the event of the foregoing, the City further elects to recoup any fee or commission paid or due to any person significantly involved in initiating, negotiation, securing, drafting or creating this contract on behalf of the City from any other party to the contract, arising as a result of this contract.

ARTICLE VI - AMBIGUITY: This Agreement is the result of negotiations by and between the parties. Although it has been drafted by the Prescott City Attorney, it is the result of the negotiations between the parties. Therefore, any ambiguity in this Agreement is not to be construed against either party.

ARTICLE VII - NONDISCRIMINATION: The Contractor, with regard to the work performed by it after award and during its performance of this contract, will not discriminate on the grounds of race, color, national origin, religion, sex, disability or familial status in the selection and retention of subcontractors, including procurement of materials and leases of equipment. The Contractor will not participate either directly or indirectly in the discrimination prohibited by or pursuant to Title VI of the Civil Rights Act of 1964, Section 504 of the Rehabilitation Act of 1973, Section 109 of the Housing and Community Development Act of 1974, the Age Discrimination Act of 1975, the Americans With Disability Act (Public Law 101-336, 42 U.S.C. 12101-12213) and all applicable federal regulations under the Act, and Arizona Governor Executive Orders 99-4, 2000-4 and 2009-09 as amended.

ARTICLE VIII - INDEPENDENT CONTRACTOR STATUS: It is expressly agreed and understood by and between the parties that the Contractor is being retained by the City as an independent contractor, and as such the Contractor shall not become a City employee, and is not entitled to payment or compensation from the City or to any fringe benefits to which other City employees are entitled other than that compensation as set forth in Article IV - Compensation above. As an independent contractor, the Contractor further acknowledges that he is solely responsible for payment of any and all income taxes, FICA, withholding, unemployment insurance, or other taxes due and owing any governmental entity whatsoever as a result of this Agreement. As an independent contractor, the Contractor further agrees that he will conduct himself in a manner consistent with such status, and that he will neither hold himself out nor claim to be an officer or employee of the City by reason thereof, and that he will not make any claim, demand or application to or for any right or privilege applicable to any officer or employee of the City, including but not limited to workmen's compensation coverage, unemployment insurance benefits, social security coverage, or retirement membership or credit.

ARTICLE IX - CITY FEES: Prior to final payment to the Contractor, the City shall deduct therefrom any and all unpaid privilege, license and other taxes, fees and any and all other unpaid moneys due the City from the Contractor, and shall apply to those moneys to the appropriate account. Contractor shall provide to the City any information necessary to determine the total amount(s) due.

ARTICLE X - LIQUIDATED DAMAGES: All time limits stated in the contract documents are of the essence and should the Contractor fail to complete the work required to be done on or before the time of completion as set forth in these contract documents, including any authorized extension of time, it is mutually agreed and understood by and between the parties that the public will suffer great damages; that such damages, from the nature of the project, will be extremely difficult and impractical to fix; that the parties hereto wish to fix the amount of said damages in advance; and that the sum of $250.00 per day for each and every day's delay in completion and acceptance of the work required to be done by the Contractor subsequent to the time of completion, including any authorized extensions of time, is the nearest and most exact measure of damages for such breach that can be fixed now or could be fixed at or after such breach and that, therefore, the Owner and Contractor

agree to fix said sum of $250.00 per day for each and every said day's delay as liquidated damages, and not as a penalty or forfeiture for the breach of the agreement to complete the work required to be done by the Contractor on or before the time of completion and acceptance and, in the case of such breach, the Owner shall deduct said amount from the amount due the Contractor under the contract. In the event the remaining balance due the Contractor is insufficient to cover the full amount of assessed liquidated damages, then the Contractor or the surety on the bonds shall pay the difference due the Owner.

ARTICLE XI - OTHER WORK IN PROJECT AREA: The City, any other contractors, whether under contract with the City, a third party, and/or utilities, may be working within the project area while this Contract is in progress. The Contractor herein acknowledges that delays and disruptions may, and in all likelihood, will occur due to other work. The Contractor's bid shall be deemed to have recognized and included costs arising from and associated with other work in the project area disclosed by the Contract Documents or which would be apparent to an experienced contractor exercising due diligence during inspection of the project documents, the question and answer session in the pre-bid process or during site inspection. No payment will be made for any delays or disruptions in the work schedule that are wholly the fault of the contractor, its agents, employees or any of the contractor's subcontractors. In the event that the contractor encounters delay or disruption in the project schedule due to factors not wholly the fault of the contractor or within the contractors control then the Contract may be adjusted pursuant to the Delay's and Extension of Time provisions of this Contract and a timely request submitted for Contract Amendment. Failure to submit a timely request for Contract Amendment shall be deemed a waiver of any entitlement to additional compensation.

ARTICLE XII - BONDS:

A. On or before the execution of the contract, the Contractor shall obtain in an amount equal to the full contract price a performance bond pursuant to A.R.S. § 34-222, conditioned upon the faithful performance of this contract in accordance with the plans, specifications and conditions herein. Such bond shall be solely for the protection of the City. A copy of this bond shall be filed with the Prescott City Clerk.

B. Contractor shall also obtain a payment bond, pursuant to the provisions of A.R.S. § 34-222, in an amount equal to this full contract price herein, said bond to be solely for the protection of claimants supplying labor or materials to the Contractor or his subcontractors in the prosecution of the work provided for in this contract. A copy of this bond shall be filed with the Prescott City Clerk.

C. All bonds must be written by an insurance company authorized to do business in the State of Arizona, to be evidenced by a Certificate of Authority as defined in A.R.S. § 20-217, a copy of which certificate is to be attached to the applicable bid bond, payment bond and performance bond. In addition, depending upon the nature of the contract and amount thereof, the City Manager may also require insurance companies and/or bonding companies to have an "A" rating or better with Moody's or A.M. Best Company, and/or to be included on the current list of "Companies Holding Certificates of Authority as Acceptable Sureties on Federal Bonds and as Acceptable Reinsuring Companies" as published in Circular 570 (as amended) by the audit staff, Bureau of Accounts, US Treasury Department.

ARTICLE XIII - MISCELLANEOUS:

A. The parties hereto expressly covenant and agree that in the event of a dispute arising from this Agreement, each of the parties hereto waives any right to a trial by jury. In the event of

litigation, the parties hereby agree to submit to a trial before the Court. The Contractor further agrees that this provision shall be contained in all subcontracts related to the project, which is the subject of this Agreement.

B. The parties hereto expressly covenant and agree that in the event of litigation arising from this Agreement, neither party shall be entitled to an award of attorney fees, either pursuant to the Contract, pursuant to A.R.S. § 12-341.01 (A) and (B), or pursuant to any other state or federal statute, court rule, case law or common law. The Contractor further agrees that this provision shall be contained in all subcontracts related to the project that is the subject of this Agreement.

C. Any notices to be given by either party to the other must be in writing, and personally delivered or mailed by prepaid postage, at the following addresses:

Public Works Director	**
City of Prescott	**
433 N. Virginia Street	**
Prescott, AZ 86301	

D. This Agreement shall be construed under the laws of the State of Arizona.

E. This Agreement represents the entire and integrated Agreement between the City and the Contractor and supersedes all prior negotiations, representations or agreements, either written or oral. This Agreement may be amended only by written instrument signed by both the City and the Contractor. Written and signed amendments shall automatically become part of the Agreement, and shall supersede any inconsistent provision therein; provided, however, that any apparent inconsistency shall be resolved, if possible, by construing the provisions as mutually complementary and supplementary.

F. In the event any provision of this Agreement shall be held to be invalid and unenforceable, the remaining provisions shall be valid and binding upon the parties. One or more waivers by either party of any provision, term, condition or covenant shall not be construed by the other party as a waiver of a subsequent breach of the same by the other party.

G. No oral order, objection, claim or notice by any party to the other shall affect or modify any of the terms or obligations contained in this Agreement, and none of the provisions of this Agreement shall be held to be waived or modified by reason of any act whatsoever, other than by a definitely agreed waiver or modification thereof in writing. No evidence of modification or waiver other than evidence of any such written notice, waiver or modification shall be introduced in any proceeding.

H. In the event of a discrepancy between this Agreement and other documents incorporated into this Agreement, this Agreement shall control over Exhibit "A".

I. Non-Availability of Funds: Fulfillment of the obligation of the City under this Agreement is conditioned upon the availability of funds appropriated or allocated for the performance of such obligations. If funds are not allocated and available for the continuance of this Agreement, this Agreement may be terminated by the City at the end of the period for which the funds are available. No liability shall accrue to the City in the event this provision is exercised, and the City shall not be obligated or liable for any future payments as a result of termination under this paragraph.

IN WITNESS WHEREOF, three (3) identical counterparts of this Contract, each of which shall for all purposes be deemed an original thereof, have been duly executed by the parties herein above named, on the date and year first above written.

ATTEST:

_____

Witness, if Contractor is an Individual

_____

**

By: _____

Title: _____

City of Prescott, a municipal corporation:

_____

Harry B. Oberg, Mayor

Attest:

_____

Dana R. DeLong, City Clerk

Approved as to Form:

_____

Jon M. Paladini, City Attorney

CONTRACTOR'S AFFIDAVIT REGARDING SETTLEMENT OF CLAIMS AND CERTIFICATION OF COMPLETION OF WARRANTIES

PROJECT: Autumn Breeze Street Improvement Project

To the City of Prescott, Arizona

Gentlemen:

1. This is to certify that all lawful claims for materials, rental of equipment and labor used in connection with the construction of the above project, whether by subcontractor or claimant in person, have been duly discharged.
2. The undersigned, for the consideration of $_____ (total project price) as set out in the final pay estimate, as full and complete payment under the terms of the Contract, hereby waives and relinquishes any and all further claims or right of lien under, in connection with, or as a result of the above-described project. The undersigned further agrees to indemnify and save harmless the City of Prescott against any and all liens, claims of liens, suits, actions, damages, charges and expenses whatsoever, which said City may suffer arising out of the failure of the undersigned to pay for all labor performance and materials furnished for the performance of said project.
3. This is to further certify that the project is completed to acceptable standards as defined in the plans and specifications for said Project Contract Agreement. Any changes to the plans have been noted on the Construction As-built Mylar Drawings certified by the Engineer of Record, which As-built Drawings have been delivered to the Public Works Director. All materials used and workmanship performed are expressly warranted to be free of defects for a period of twenty-four (24) months from the date of final acceptance by the City of Prescott.

Signed and dated this _____ day of _____, 2016.

_____

Contractor

By: _____

Title: _____

State of _____)
) ss.
County of _____)

SUBSCRIBED AND SWORN to before me by _____

this _____ day of _____, 2016.

_____ _____

Notary Public Commission Expires

GENERAL CONDITIONS

COMMENCEMENT, PROSECUTION AND PROGRESS

PRECONSTRUCTION CONFERENCE

Within 15 days of the date of the Notice of Award, the Contractor is required to attend a Pre-construction Conference. The City will contact the Contractor to schedule a specific date, time and location for the Pre-construction Conference. The purpose of the meeting is to outline specific construction items and procedures and to address items, which require special attention on the part of the Contractor. The Contractor may also present proposed variations in procedures, which the Contractor believes may be of benefit to the project, reduce cost, or will reduce inconvenience to the public. Communication and coordination issues will be also addressed during the Pre-construction Conference. The Contractor will be required to provide five sets of the following information at the Pre-construction Conference:

A. Names and emergency telephone number of key personnel involved in the project.

B. A copy of each subcontractor's contract or purchase order agreement for each and every item of work under subcontract on the project.

C. The Construction Schedule as defined elsewhere in the General Conditions.

D. A payment schedule showing the estimated dollar volume of work for each calendar month during the life of the project.

E. The Traffic Control and access management plan providing for continuous access to residents and businesses affected by the project.

F. The Contractor's Company Safety Plan.

G. The Contractor's Quality Control Plan.

H. An itemized list of shop drawings, materials, mix designs, equipment submittals and a schedule indicating the dates each of these items will be transmitted to the Public Works Director for review.

Each of the above items is subject to review and approval by the Public Works Director.

COMMENCEMENT

The Contractor shall commence work on or before the tenth (10th) calendar day after receiving the Notice to Proceed, and shall complete all work under the Contract within the period of time specified in the Special Conditions. The City reserves the right to issue Notice to Proceed at any time between zero (0) and sixty (60) days after contract award. Notice to Proceed will be issued not later than sixty (60) calendar days after the Contract has been awarded unless otherwise agreed upon in writing, or as may be specified in the Special Conditions. In addition, Contractor shall not commence work until all required documents, bonds, plans and schedules have been received and approved by the City. These submittals will not affect the issuance of Notice to Proceed by the City.

PUBLIC NOTICE

A. Contractor shall issue written notification to those residents affected by the Autumn Breeze Street Improvement Project. This notification shall contain at a minimum: (1) Type of Work; (2) Contractor; (3) Contractor's Phone Number and Point of Contact; (4) Duration of Project; (5) Date Project Commences; (6) Description of Project Site; (7) Contractor's After-hours Point of Contact and Phone Number.

B. The Contractor is required to post public notification signs at all entrances to the project specifying the following information: (1) Project Name/Description (2) Construction Calendar (3) Contractor Name/Phone Number Day and Night (4) City Public Works (928) 777-1130.

C. The sign size and legend shall be appropriate for the intended purpose and be easily read. Sign background shall be blue with white letters. The sign size and legend content shall be approved by the Public Works Department prior to sign manufacture. All signs shall be posted prior to commencement of any work on the project. Signs will be removed by the contractor upon final acceptance of the project. No direct payment shall be made for said signs, cost of such shall be considered incidental to the contract.

SUBCONTRACTORS

MAG Specifications, Section 108.2, including the following:

A. All subcontractors and purchase orders for equipment shall state and establish guaranteed delivery dates, at such times as determined by the Contractor, which will allow the Contractor to complete the project within the Contract time.

B. The Contractor shall perform more than forty percent (40%) of the work (by total contract amount) involved in this project with his own forces. Total subcontracted amounts shall be limited to less than sixty percent (60%) of the total contract amount. For purposes of this requirement, materials purchased directly from suppliers and installed by the Contractor's own forces shall be included in the Contractor's total and materials installed by subcontractors, regardless of who originally purchased them, will be included in the Subcontractors totals.

C. The Contractor shall furnish the form list of subcontractors with his bid including the estimated amount of each subcontract. Additionally, a duplicate copy of each subcontract, including lower tier subcontracts, shall be delivered to the Public Works Director upon award of the project and prior to the issuance of the Notice to Proceed.

CONTRACTOR'S REPRESENTATIVE AND EMERGENCIES

MAG Specifications, Section 105.5, including: Plans and specifications to successful bidder clause in the "Information for Bidders" in this set of specifications.

CONTRACTOR AND SUBCONTRACTOR RECORDS

A. The Contractor shall keep at the work site a copy of the Contract Documents and shall at all times give the Public Works Director access thereto.

B. The Notice Inviting Bids, Information for Bidders, Special Conditions, Specifications, Plans, and all supplementary documents are intended to be complete and complementary and to prescribe a complete work. If any omissions are made of information necessary to carry out the full intent and meaning of the contract documents, the Contractor shall immediately call the matter to the attention of the Public Works Director for furnishing of detailed instructions. In case of discrepancies, the Specifications shall govern over the plans. Figured dimensions shall govern over scaled dimensions.

C. Any drawings or plans listed anywhere in the Specifications or Addenda thereto shall be regarded as a part thereof and of the Contract. Anything mentioned in these Specifications and not indicated on the plans, or anything indicated on the plans and not mentioned in these Specifications, shall be in the same force and effect as if indicated or mentioned in both.

D. The Contractor, subcontractors and all suppliers shall keep and maintain all books, papers, records, files, accounts, reports, bid documents with back-up data, including electronic data, and all other material relating to the contract and project for three years following completion and acceptance of the work. All records shall be accurately maintained in accordance with generally accepted accounting principles and practices uniformly and consistently applied in a format that will permit audit. The Public Works Director or his authorized representative(s) shall have access at all reasonable times to all applicable records of the Contractor and the records of the Contractor's subcontractors.

The Contractor and Subcontractors shall preserve all such materials for a period of three years after all payments to the Contractor or subcontractors, or until the final resolution of all claims made by the Contractor or subcontractor on this contract, whichever is later. The Contractor and subcontractors shall make all of the above materials available to the Public Works Director for auditing, inspection and copying and shall produce such materials upon written request at the office of the Public Works Director located at 433 N. Virginia St., Prescott Arizona.

The Contractor shall insert the above requirement in each subcontract, purchase order, lease agreement, or other document under which goods or services are provided for the performance of this contract and shall also include in all subcontracts a clause requiring subcontractors to include the above requirement in any lower-tier subcontract, purchase order, lease agreement or document under which goods or services are provided for the performance of this contract.

ADDENDA, REVISIONS AND SUPPLEMENTARY DRAWINGS

A. The work shall conform to such other drawings relating thereto as may be furnished by the City prior to the opening of proposals, and to such drawings in the explanation of details or minor modifications as may be furnished from time to time during construction, including such minor modifications as the Public Works Director may consider necessary during the prosecution of the work.

B. Scaled dimensions shall not be used in the construction of the work.

ERROR AND OMISSIONS

The written dimensions, calculations and quantities on the plans are presumed to be correct, but the Contractor shall be required to check carefully all dimensions, calculations and quantities before beginning work. If any errors or omissions are discovered, the Public Works Director shall be so advised in writing and will make the proper corrections. If the Contractor claims that any such errors or omissions should change the cost of any Pay Item or the construction as identified in the plans, the Contractor shall also submit to the Public Works Director a written proposed Contract Amendment. Any such adjustments made by the Contractor that are claimed to change the cost of any Pay Item or the construction as identified in the plans, without prior review and acceptance of a proposed Contract Amendment, shall be at the Contractor's own risk. The settlement of any complications or disputed expenses arising from a Contractor's adjustment shall be borne by the Contractor at his own expense.

CHARACTER OF WORKMEN

MAG Specifications, Section 108.6.

SUSPENSION OF WORK

A. The Public Works Director shall have the authority to suspend the work wholly or in part, for such period as he may deem necessary, due to unsuitable weather, or to such other conditions as

are considered unfavorable for the suitable prosecution of the work, or for such time as he may deem necessary due to the failure on the part of the Contractor to carry out orders given, or to perform any provisions of the Contract. The Contractor shall immediately comply with the written order of the Public Works Director to suspend work wholly or in part. The suspended work shall be resumed when conditions are favorable and methods are corrected, as reviewed and accepted in writing by the Public Works Director.

B. In case of suspension of work for any cause whatsoever, the Contractor shall be responsible for all materials and shall properly store them if necessary and shall provide suitable drainage and erect temporary structures where necessary.

C. If the performance of all or any portion of the work is suspended or delayed by the Public Works Director in writing for an unreasonable period of time (not originally anticipated, customary, or inherent to the construction industry) and the contractor believes that additional compensation and/or contract time is due as a result of such suspension or delay, the contractor shall submit to the Public Works Director, in writing, a request for an adjustment within seven (7) calendar days of receipt of the notice to resume work. The request shall set forth the reasons and support for such adjustment.

D. Upon receipt, the Public Works Director will evaluate the contractor's request. If the Public Works Director agrees that the cost and/or time required for the performance of the contract has increased as a result of such suspension and the suspension was caused by conditions beyond the control of and not the fault of the contractor, its suppliers, or subcontractors at any approved tier, and not caused by weather, the Public Works Director will make an adjustment (excluding profit) and modify the contract in writing accordingly. The contractor will be notified of the Public Works Director's determination whether or not an adjustment of the contract is warranted. In the event an adjustment of the contract is warranted a contract amendment shall be executed by both parties evidencing mutual agreement to same.

E. No contract adjustment will be allowed unless the contractor has submitted the request for adjustment within the time limits prescribed.

F. No contract adjustment will be allowed under this clause to the extent that performance would have been suspended or delayed by any other cause, or for which an adjustment is provided or excluded under any other term or condition of this contract.

DELAYS AND EXTENSION OF TIME

MAG Specifications, Section 108.7, including:

A. It is the Contractors responsibility to establish construction methods and a construction schedule, which will facilitate the completion of work required by this Contract within the contract period and with full consideration for the season during which the work is scheduled. Judgment as to hazardous conditions shall be made by the Public Works Director.

B. To receive consideration for an extension of time, a request must be made in writing to the Public Works Director stating the reason for said request, and such request must be received by the Public Works Director as soon as reasonably practicable when the contractor has knowledge or should have known of the delay causing event, condition or circumstances, but in no event later than immediately following the end of the delay-causing condition. The extension of time allowed shall be as determined by the Public Works Director and approved by the City. In setting the Contract time, it has been assumed that up to five (5) working days may be lost as a result of weather conditions which will slow down the normal progress of work; therefore no extensions

in contract time will be allowed for the first five (5) working days lost due to bad weather conditions. An extension of time may be granted by the City after the expiration of the time originally fixed in the Contract or as previously extended, and the extension so granted shall be deemed to commence and be effective from the date of such expiration.

C. Any extension of time shall not release the sureties upon any bond required under the Contract. Extensions of time in and of themselves will not be a basis for a request of additional compensation by the Contractor.

D. Any delays in this project, or extensions of time which may be granted, shall not entitle the Contractor to any additional compensation or monies whatsoever, including but not limited to compensation for loss of anticipated profits, extended overhead, unabsorbed home office overhead, or any other payments, unless expressly agreed to by the City in a duly executed and approved contract amendment.

PAYMENT FOR DELAY

MAG 109.8 except as modified hereafter:

109.8.2, (B) Any compensation paid to the Contractor shall be in accordance with the General Conditions, Payment to Contractors, section of this Contract.

109.8.3 Extension of Contract Time: For any such delays, the contract time will be adjusted in accordance with the General Conditions, Delays and Extension of Time, section of this Contract.

TERMINATION FOR BREACH OF CONTRACT

MAG Specifications, Sections 108.10 and 108.11, including: The foregoing provisions are in addition to and not in limitation of any other rights or remedies available to the City.

METHODS AND EQUIPMENT

MAG Specifications, Section 108.6, including: The methods and equipment adopted by the Contractor shall be such as will secure a satisfactory quality of work and will enable the Contractor to complete the work in the time agreed upon. The selection and use of these methods and equipment is the responsibility of the Contractor.

DATE OF ACTUAL COMPLETION

The date upon which the project will be considered as complete shall be that date upon which the work is accepted by the City.

FINAL ACCEPTANCE

MAG Specifications, Section 105.15 (B), including:

A. After all work under the Contract has been completed, as determined by the Public Works Director, the Public Works Director will recommend in writing to the City that final acceptance of the entire work under this Contract be made as of the date of the Public Works Director final inspection. The City will make final acceptance promptly after receiving the Public Works Director's recommendation.

B. Partial Acceptance may be given upon substantial completion of the work at the sole discretion of the Public Works Director in accordance MAG 105.15 and the paragraph entitled PARTIAL ACCEPTANCE OF WORK in these General Conditions.

C. For the purpose of this section, Substantial Completion shall mean that stage in the progress of the Work where the Work or designated portion is sufficiently complete in accordance with the

Contract Documents so that the Owner can occupy or utilize the Work for its intended use with only minor work items or cleanup items remaining to be accomplished. Partial Acceptance shall not be given for incomplete major work items nor minor work items affecting public health and safety.

D. Contract Time accounting and/or Assessment of Liquidated Damages shall be suspended on the date of Partial Acceptance and the Contractor shall complete all remaining work items necessary for Final Acceptance within 30 calendar days of the date of Partial Acceptance. The City shall withhold release of retention until all items under the contract have been completed and Final Acceptance has been issued.

SAFETY, HEALTH AND SANITATION PROVISIONS

MAG Specifications, Section 107.5, including:

A. The Contractor shall provide suitable and adequate sanitary conveniences for the use of all persons employed on the project. All sanitary conveniences shall conform to the regulations of the public authority having jurisdiction over such matters. At the completion of the project, all such sanitary conveniences shall be removed and the premises left in a sanitary condition.

B. On all projects, with respect to sanitation facilities, for which Federal funds are allocated, the Contractor shall cooperate with and follow directions of representatives of the Public Health Service and the State. State and County public health service representatives shall have access to the work wherever it is in preparation or progress, and the Contractor shall provide proper facilities for such access and inspection.

TRAFFIC CONTROL

Traffic control is the responsibility of the Contractor and shall be in accordance with MAG Specifications, Section 401. The Contractor shall submit to the City, for approval, a traffic control plan for all activities connected with the proposed work.

WATER

A. The Contractor shall supply adequate, pure cool drinking water with individual drinking cups for the use of employees on this construction. The quality of drinking water shall meet the "Standards for Public Water Supplies" specified in the State Health Department Code.

B. It shall be the responsibility of the Contractor to provide and maintain, at his own expense, an adequate supply of water for his use for construction and to install and maintain necessary supply connections and piping for same. Before final acceptance of the completed project, all temporary connections and piping installed by the Contractor shall be removed.

C. The Contractor shall apply for a fire hydrant meter for all construction water used if the Contractor desires to obtain water from the City distribution system at any point. All contractors requesting construction water from the City must submit a Construction Water Meter Application to the Water Distribution Department. A $1,000 deposit will be required for hydrant meters. If construction water use occurs during the months of May through September the Contractor shall also include a dust abatement program. Potable water may not be allowed for dust abatement during these months. Potable water can be used to process embankment fill and base materials year round. However, contractors are encouraged to use treated effluent for construction activities. The City has two outlets for effluent, the Sundog Wastewater Treatment Plant and the Airport Wastewater Treatment Plant. The City will provide metered standpipes for effluent at both plants. The Contractor will be required to estimate daily and total potable/effluent water

usage for the project as identified on the Construction Water Meter application. The Contractor will be responsible for all costs associated with obtaining and delivering construction water.

PROTECTION OF WORK

MAG Specifications, Section 107.10.

CLEANUP AND DUST CONTROL

MAG Specifications, Sections 104.1.3 and 104.1.4, including: Salvage material shall be stored at areas designated by the Public Works Director.

GUARANTEE OF WORK

MAG Specifications, Section 108.8, shall apply, but modify: Guarantee period is two (2) years. During the two year guarantee period, should the Contractor fail to remedy defective material and/or workmanship, or to make replacements within five (5) calendar days after written notice by the City, it is agreed that the City may make such repairs and replacements and the actual cost of the required labor and materials shall be chargeable to and payable by the Contractor.

CONTINGENCIES

All loss or damage arising from obstruction or difficulties which may be encountered in the prosecution of the work, from the action of the elements, or from any act or omission on the part of the Contractor or any person or agent employed by him shall be borne by the Contractor.

NOTICE AND SERVICE THEREOF

Any notice to the Contractor from the City relative to any part of this Contract shall be in writing and considered delivered and the service thereof completed when said Notice is posted, by first class mail, to the said Contractor at his last given address, or delivered in person to said Contractor or his authorized representative on the work.

PROJECT MEETINGS

A. It shall be the responsibility of the Contractor to conduct weekly meetings to be attended by representatives of Subcontractors, utilities, the Public Works Director and other interested parties for the purpose of keeping the project on schedule and to provide for necessary coordination of the work of the various parties. The Contractor shall take minutes at each meeting for distribution to all attendees the following week. The minutes shall be of sufficient detail to accurately recount the meeting discussion, including but not limited to progress, work schedule, submittals and certifications, utilities, construction issues, contract changes, safety and traffic control, action items, resolved and unresolved issues.

B. Additionally the Contractor shall furnish the Public Works Director with written weekly project status reports at the beginning of each weekly project meeting. The report shall cover the work of the preceding work week and shall include the following for each week.

   1. A comprehensive daily list of the Contractor's men and equipment performing the work on the jobsite.

   2. A comprehensive daily list of Contractor's subcontractors' men and equipment, if any, performing the work on the jobsite.

   3. A brief description of the work performed by the Contractor and Contractor's subcontractors, if any.

4. The estimated percentage of each portion of the work performed for the period together with the total percentage of each portion of the work performed to the date of the report.
5. A detailed summary of each work stoppage, if any, occasioned by the City, other contractors, or other designated reasons, which were beyond the contractor's control.
6. Comments or exceptions to prior weekly meeting minutes shall be addressed at each subsequent construction meeting.

CONSTRUCTION SCHEDULE

Per MAG Specifications, Section 108.4 and Section 108.5, including:

A. The Construction schedule shall indicate the time of starting and completing each major phase of the project and such intermediate phases as will serve for well-defined control points. The schedule shall be of sufficient detail to define the Critical Path for project completion. It shall also indicate the scheduled receipt of major items of equipment and the items of equipment installation dates of which is critical to the scheduled progress of the project. Two week look-ahead schedules will be provided by the contractor at each weekly construction meeting. The comprehensive project schedule shall be updated and submitted monthly. Such updates shall include and accurately reflect additional work, changes in the work, delays to individual items of work and reasons therefore along with the extent of delay and any other items affecting the progress of the project.

B. Failure by the contractor to provide the weekly/monthly updates will result in the City withholding an amount equal to 5% of the monthly pay estimate relative to the billing period in which the schedule updates are to be provided. Said 5% withholding will be retained by the City until the required schedule updates are submitted by the Contractor, reviewed by the City and found to be current. When the schedule updates are determined to be in conformance with the provisions herein the 5% retainer will be released with the next monthly payment.

C. The construction schedule shall serve as an index of progress prosecution as contemplated by the Contractor. In the event the actual construction progress varies substantially from the scheduled progress, the Public Works Director will require and the Contractor shall be required, within ten (10) calendar days written notice, to provide a revised construction schedule, giving in detail the particular changes in production as estimated by the Contractor to complete the work within the specified Contract Time. Time is of the essence in this regard.

ACCIDENT PREVENTION

MAG Specifications, Section 107.5 and 107.6 including:

A. Machinery, equipment and other hazards shall be guarded or eliminated in accordance with the safety provisions of the Manual of Accident Prevention in Construction published by the Associated General Contractors of America, and the requirements of the Occupational Safety and Health Administration.

B. First aid facilities and information posters conforming at least to the minimum requirements of the Occupational Safety and Health Administration shall be provided in a readily accessible location or locations.

C. The Contractor shall make all reports as are, or may be, required by the Engineer or any authority having jurisdiction, and permit all safety inspections of the work being performed under this Contract. Before proceeding with any construction work, the Contractor shall take all the necessary action to comply with all provisions for safety and accident prevention. In the event the

Contractor fails to comply with said safety provisions or directions of the Public Works Director, the Public Works Director without prejudice to any other rights of the City, may issue an order stopping all or any part of the work.

D. Thereafter, a start order for resumption of the work may be issued at the discretion of the Public Works Director when in his opinion the defection from safety requirements has been corrected. The Contractor shall make no claim for an extension of time or for compensation or damages by reason of or in connection with such work stoppage.

CONSTRUCTION FACILITIES

All construction hoists, elevators, scaffolds, stages, shoring, and similar temporary facilities shall be of ample size and capacity to adequately support and/or move the loads to which they will be subjected. All railings, enclosures, safety devices, and controls required by law or for adequate protection of life and property shall be provided.

TEMPORARY FACILITIES

The Contractor shall provide all temporary facilities and utilities required for prosecution of the work; protection of employees and the public; protection of the work from damage by fire, weather or vandalism; and such other facilities as may be specified or required by any legally applicable law, ordinance, rule, or regulation.

WARNING DEVICES AND BARRICADES

Per MAG Specifications, Section 107.7.

HAZARDS IN PUBLIC RIGHT-OF-WAY

Per MAG Specifications, Section 107.7.

HAZARDS IN PROTECTED AREAS

Excavations on project sites from which the public is to be excluded shall be marked or guarded in a manner appropriate for the hazard.

PROTECTION OF EXISTING ITEMS

The Contractor shall protect all existing structures, trees, shrubs, and other items on the project site that are to be preserved, by substantial barricades or other devices commensurate with the hazard, from injury or destruction by vehicles, equipment, workmen, or other agents.

PROJECT SECURITY

The Contractor shall make adequate provision, subject to the approval of the Public Works Director, to protect the project and Contractor's facilities from fire, theft, and vandalism, and the public from unnecessary exposure to injury.

FIRE EXTINGUISHER

At least one (1) fire extinguisher, rated at least 2A, shall be provided on the job site.

OFF-SITE ROADS

Except as otherwise shown or specified, off-site access roads shall be adequately maintained, graded-earth roads. Such roads shall be built only in the public right-of-way or easements obtained by the City. If the Contractor elects to build along some other alignment, he shall obtain, without additional cost to the City, necessary rights-of-way or easements.

NOISE ABATEMENT

In inhabited areas, particularly residential, operations shall be performed in a manner to minimize unnecessary noise generation. Particular consideration shall be given to noise generated by repair and service activities during the night hours in residential areas. No repair or service activities shall be conducted between the hours of 6:00 p.m. and 7:00 a.m.

DRAINAGE CONTROL

In excavation, fill, and grading operations, care shall be taken to disturb the pre-existing drainage pattern as little as possible. Particular care shall be taken not to direct drainage water onto private property or into streets or drainage ways inadequate for the increased flow.

PROJECT CLOSE-OUT

It is the intent of these Specifications and Contract Documents that the Contractor shall deliver a complete and operable facility capable of performing its intended functions and ready for use. The City shall withhold Final Payment and release of retention until ALL of the following items have been completed:

A. Completion of all work, including punch-list items and Final Acceptance of the work by the City.

B. Submittal by Contractor of final pay estimate, which shall show the amount of work performed according to the Contract and approved by the City.

C. Submittal by the Contractor of all Project Record Documents, including As-Built drawings, operation and maintenance manuals, and other records as referenced herein.

D. Submittal by Contractor of CONTRACTOR'S AFFIDAVIT REGARDING SETTLEMENT OF CLAIMS AND CERTIFICATION OF COMPLETION AND WARRANTIES.

E. Closeout of any and all permits issued to the Contractor by the City or any other agency for the work included in the project.

F. Submittal by Contractor of EPA SWPPP Notice of Termination (if applicable).

WASTE DISPOSAL, GRADING AND MATERIAL STORAGE

A. The Contractor shall provide for the disposal of all surplus materials, waste products, debris, etc., and shall make necessary arrangements for such disposal. The Contractor shall obtain written permission from property owners(s) prior to disposing of any surplus materials, waste products, debris, etc., on private property, and shall also obtain the approval of the Public Works Director prior to such disposal.

B. The Public Works Director will not approve the filling of ditches, washes, drainage ways, etc., which may in his opinion create water control problems.

C. The Public Works Director will not approve disposal operations, which will, in his opinion, create unsightly and/or unsanitary nuisances.

D. The Contractor shall maintain the disposal site(s) in a reasonable condition of appearance and safety during the construction period as required by the Public Works Director. Prior to final acceptance of the project, the Contractor shall have completed the leveling and cleanup of the disposal site(s) to the satisfaction of the Public Works Director.

E. The Contractor shall obtain a grading permit or any other permit required by the City, Yavapai County or any other county, or State or federal rules, regulations, laws, ordinances, or any other

regulatory authority for all construction operations of the Project, including but not limited to the following:

1. Areas disturbed by the Contractor, including staging areas, borrow areas, waste areas, or material storage areas, located within the City limits that are subject to any requirements of the City Code or City Land Development Code, including but not limited to Section 6.7 – Site Disturbance, Grading and Restoration Standards, of the City Land Development Code; Section 9.6 – Site Disturbance and Grading Permit, or Chapter 16-2: DRAINAGE REGULATIONS;
2. Areas outside of the City limits that are subject to the requirements of Yavapai County for any activities described in this section, "WASTE DISPOSAL";
3. The disposal of waste material on private property dependent upon site specific conditions at the waste area(s) and characteristics of the fill in accordance with Paragraph 1. The fees for a permit for this activity shall not be waived; said fees are incidental to the appropriate bid item(s);
4. The staging or material storage area(s) that:
   a. Are not City owned property on the project, or
   b. Require clearing or grubbing in excess of 10,000 sf.

   Fees for a permit(s) for this activity shall not be waived; said costs are incidental to the appropriate bid item(s).
5. Site disturbances for infrastructure improvements on City owned property not within the right-of-way for which the disturbance is greater than 50 cubic yards of material or in excess of 10,000 square feet. The associated fees for grading permits for this activity on City owned property shall be waived.

PROJECT RECORD DOCUMENTS

A. The Contractor shall maintain at the site, available to the City and Engineer, one (1) copy of all Drawings, Specifications, Addenda, approved Shop Drawings, Change of Orders, and other modifications in good order and marked to record all changes made during construction. These shall be delivered to the City upon completion of the Project or the earlier termination of the parties' contract.

B. The contractor shall maintain any and all documentation to substantiate all costs on the project, including but not limited to those items included in "Force Account" computations, computations reflecting the actual cost of work on the project and computations substantiating any claimed increases or additional costs incurred in the project by the contractor, and shall make those records available to the City (or provide copies thereof to the City) within 24 hours of request by the City. The failure of the Contractor to maintain and produce the foregoing documentation will preclude the Contractor from being entitled to any additional payments for any additional work in question.

CONTROL OF WORK

ABBREVIATIONS

MAG Specifications, Section 101.1, including abbreviations as shown on the Plans.

AUTHORITY AND DUTIES OF INSPECTOR

Per MAG Specifications, Section 105.9, including:

A. An inspector is to be assigned to the project by the City to monitor the project and to keep the Public Works Director informed as to the progress of the work and the manner in which it is being done. Additionally, the inspector will call the Contractor's attention to any non-conformance with the Plans and Specifications. He will not be authorized to approve or accept any portion of the work or to act as foreman for the Contractor. Inspection will be done on an as needed or on-call basis.

B. The inspector will exercise such additional authority only as may from time to time be delegated to him by the Public Works Director.

INSPECTION

MAG Specifications, Section 105.10, including:

Inspection is to be done by the City Public Works Department. The Contractor shall furnish the Public Works Director with every reasonable facility for ascertaining whether or not the work as performed is in accordance with the requirements and intent of the Specifications and Contract. If the Public Works Director requests it, the Contractor at any time before acceptance of the work shall remove or uncover such portions of the finished work as may be directed. After examination, the Contractor shall restore said portions of the work to the standards required by the Specifications. Should the work thus exposed or examined prove acceptable, the uncovering or removing and the replacing of the covering or making good of the part removed will be paid for as provided under CHANGES IN THE WORK, but should the work so exposed or examined prove unacceptable, the uncovering or removing and the replacing of the covering or making good of the parts removed shall be at the Contractor's expense. Inspection or supervision by the Public Works Director shall not be considered as direct control of the individual workman and his work. The direct control shall be solely the responsibility of the Contractor's foreman and superintendent.

AUTHORITY OF THE ENGINEER

MAG Specifications, Section 105.1 with the following exception: References to "the Engineer" shall mean Public Works Director.

PLANS

A. The Contract Plans consist of general drawings. These indicate such details as are necessary to give a comprehensive idea of the construction contemplated. All authorized alterations affecting the requirements and information given on the Contract Plans shall be in writing. The Contract Plans shall be supplemented by such working or shop drawings prepared by the Contractor as are necessary to adequately control the work. No change shall be made by the Contractor in any working or shop drawing after it has been accepted by the Public Works Director.

B. The Contractor shall keep a copy of the Plans and Specifications at the job site, and shall at all times give the Public Works Director access thereto. Any drawings or plans listed in the Detailed Specifications shall be regarded as a part thereof and the Public Works Director will furnish from time to time such additional drawings, plans, profiles, and information as he may consider necessary for the Contractor's guidance.

C. All authorized alterations affecting the requirements and information given on the accepted plans shall be in writing. No changes shall be made of any plan or drawing after the same has been

accepted by the Public Works Director except by consent of the Public Works Director in writing.

CONFORMITY WITH PLANS AND ALLOWABLE DEVIATIONS

MAG Specifications, Section 105.3.

COORDINATION AND INTERPRETATION OF PLANS AND SPECIFICATIONS

MAG Specifications, Section 105.4, including:

A. In the event of any doubt or question arising regarding the true meaning of these Specifications, Special Provisions, or the Plans, reference shall be made to the Public Works Director, whose decision thereon shall be final. In the event of any discrepancy between any drawing and the figures written thereon, the figures shall be taken as correct.

B. In the event of there being a conflict between one contract document and any of the other contract documents the document highest in precedence shall control and supersede the document which is contrary to it. The order of precedence of the contract documents is as follows:

1. Supplemental Agreements, the last in time being the first in precedence.
2. The formal Contract.
3. Notice Inviting Bids.
4. Information for Bidders.
5. Special Provisions.
6. Technical Specifications.
7. Plans.
8. General Conditions.
9. Contractor Proposal.

ORDER OF WORK

A. When required by the Contract Documents, the Contractor shall follow the sequence of operations as set forth therein.

B. Full compensation for conforming to such requirements will be considered as included in the prices paid for contract items of work and no additional compensation will be allowed therefore.

CONSTRUCTION STAKES, LINES AND GRADES

MAG Specifications, Section 105.8.

REMOVAL OF UNACCEPTABLE AND/OR UNAUTHORIZED WORK

MAG Specification, Section 105.11.

MAINTENANCE DURING CONSTRUCTION

MAG Specifications, Section 105.12.

COOPERATION BETWEEN CONTRACTORS

The City reserves the right at any time to contract for and perform other additional work on or near the work covered by the contract.

When separate contracts are let within the limits of any one project, each contractor shall conduct his work so as not to interfere with or hinder the progress or completion of the work being performed by other Contractors. Contractors working on the same project shall cooperate with each other as directed.

The Contractor shall arrange his work and shall place and dispose of the materials being used so as not to interfere with the operations of the other Contractors within the limits of the same project. He shall join his work with that of others in an acceptable manner and shall perform it in proper sequence to that of others.

The City will not honor any claim for extra compensation due to delays, extra work, or extension of time caused by any other Contractors working within the limits of the same project.

COORDINATION OF WORK

A. Prior to starting construction, the Contractor shall submit their construction schedule to the Public Works Director for approval.

B. It shall be the responsibility of the Contractor to maintain overall coordination of the project. Based on the general contract construction schedule prepared in accordance with these Specifications, the Contractor shall obtain from each of his Subcontractors a similar schedule and shall be responsible for all parties maintaining these schedules or for coordinating changes necessitated by unforeseen difficulties.

LINES AND GRADES

All work under this Contract shall be built in accordance with the detailed scope of work.

MATERIALS AND WORKMANSHIP

GENERAL

MAG Specifications, Section 106.1, including:

A. Where equipment, materials, or articles are referred to in the Specifications as "or equal", or "equal to" any particular standard, the Public Works Director shall decide the question of equality.

B. Wherever any standard published specification is referred to, the latest edition or revision, including all contract amendments, shall be used unless otherwise specified. Materials of a general description shall be the best of their several kinds, free from defects, and adapted to the use for which provided. The physical characteristics of all materials not particularly specified shall conform to the latest standards published by the American Society for Testing and Materials, where applicable. All material shall be new and of the specified quality and equal to the accepted samples, if samples have been submitted.

C. All work shall be done and completed in a thorough, workmanlike manner notwithstanding any omission from these Specifications or from the Plans; and it shall be the duty of the Contractor to call the Public Works Director's attention to apparent errors or omissions and request instructions before proceeding with the work. The Public Works Director may, by appropriate instructions, correct errors and supply omissions, which instructions shall be binding upon the Contractor as though contained in the original Specifications or Plans.

SUBSTITUTION OF MATERIAL OR EQUIPMENT

MAG Specifications, Section 106.4, including: Requests relative to substitutions for materials or equipment specifically designated on the Plans or in the Specifications shall be made in writing, and such requests shall be accompanied by complete data on which the Public Works Director can make determination on the merits of the proposed substitution. The written request shall state how the product proposed for a substitution compares with or differs from the designated product in composition, size, arrangement, performance, etc., and in addition, the request shall be accompanied by documentary evidence of equality in price and delivery or evidence of difference in price and delivery. Data on price shall be in the form of certified quotations from suppliers of both the designated and proposed items. All items accepted for substitution shall be subject to all applicable provisions of the Specifications. Should substitution be allowed under the foregoing provisions, and should the item subsequently prove to be defective or otherwise unsatisfactory for the service for which it was intended, the Contractor, shall without cost to the City, and without obligation on the part of the Public Works Director, replace the item with the material originally specified.

FABRICATED MATERIALS AND SHOP DRAWINGS

Fabricated materials and shop drawings shall be handled as set forth in the Special Conditions.

MATERIALS FURNISHED BY THE CITY

MAG Specifications, Section 106.8.

STORAGE AND HANDLING OF MATERIALS

MAG Specifications, Section 106.5 and 106.6, including: Protection of materials and equipment stored on the site shall be the responsibility of the Contractor. The City reserves the right to direct the Contractor to provide proper means of protection for materials if such is deemed advisable by the Public Works Director; however, the exercise of or failure to exercise this right shall not be deemed to relieve the Contractor of his primary responsibility for protecting the material and equipment. The Contractor shall provide suitable warehouses or other adequate means of protection for such if the materials and equipment require storage and protection. The Contractor shall store and care for the materials and equipment in the most suitable manner to protect them from distortion, rain, dust, or other damage. The cost of replacing any material or equipment damaged in storage shall be borne by the Contractor, and the fact that material or equipment has been damaged after partial payment has been made shall not relieve the Contractor of his primary responsibility. No motor shall be left uncovered or unprotected.

REJECTED MATERIALS

MAG Specifications, Section 106.7.

UTILITIES

MAG Specifications, Section 107.11.

DRIVEWAYS AND WALKS

Inconvenience caused by digging across driveways and sidewalks shall be kept to a minimum by restoring the serviceability of the drive or sidewalk as soon as possible. Before blocking driveways, the Contractor shall notify the property owner. The Contractor shall replace or repair any damage done to driveways and walks to not less than the condition existing prior to the Contractor's work. If it is necessary to leave an excavation open across driveways or sidewalks, the Contractor shall provide temporary relief in the form of steel plates over the excavation. Direct access shall be

provided at all times to fire engine houses, fire hydrants, hospitals, police stations, and at all other agencies or services where emergencies may require immediate access to same.

ROADS AND FENCES

Streets and roads subjected to interference by the prosecution of this work shall be kept open and maintained by the Contractor until the work is completed.

TREES AND SHRUBBERY

A. All trees and shrubbery within the right-of-way or easements shall be protected by the Contractor insofar as practicable.

B. In the event shrubbery or trees must be trimmed, or removed, the Contractor shall notify the property owner to do so within a reasonable time prior to construction. All shrubbery or trees not removed by the property owner shall be trimmed or removed by the Contractor and hauled from the job at the Contractor's expense.

C. All trees, shrubs, hedges, brush, etc. designated on the Plans, or by the Public Works Director for removal, shall be completely removed and disposed of as indicated on the Plans or as specified by the Public Works Director.

IRRIGATION DITCHES AND STRUCTURES

The Contractor shall contact the owners of any ditches, irrigation lines, and appurtenances, which interfere with the work and shall make arrangements for dry- up or scheduling of water deliveries. The Contractor shall be liable for any damage due to irrigation facilities damaged by his operations and shall repair such damaged facilities to an "equal or better than" original condition.

SUBMITTALS

Per MAG Specifications, Section 105.2, including:

A. In ample time for each to serve its proper purpose and function, the Contractor shall submit to the Public Works Director such schedules, reports, drawings, lists, literature samples, instructions, directions, and guarantees as are specified or reasonably required for construction, operation, and maintenance of the facilities to be built and/or furnished under this Contract.

B. Shop drawings and data shall be submitted to the Public Works Director in such number of copies as will allow him to retain four (4) copies of each submittal. The submittal shall clearly indicate the specific area of the Specifications or Plans for which the submittal is made. The additional copies received by him will be returned to the Contractor's representative at the job site. The Public Works Director's notations of the action, which he has taken, will be noted on one (1) of these returned copies.

C. The above drawings, lists, prints, samples, and other data shall become a part of the Contract and a copy of the same shall be kept with the job site plans and the fabrications furnished shall be in conformance with the same.

MATERIALS AND EQUIPMENT SCHEDULES

Drawings of minor or incidental fabricated materials and/or equipment may not be required by the Public Works Director. The Contractor shall furnish the Public Works Director tabulated lists of such fabrications, showing the names of the manufacturers and catalog numbers, together with samples of general data as may be required to permit determination by the Public Works Director as to their acceptability for incorporation in the work.

QUALITY CONTROL

A. All material shall be of the specified quality and equal to the approved samples, if samples have been submitted. All work shall be done and completed in a thorough, workmanlike manner, notwithstanding any omission from these Specifications or from the Plans; and it shall be the duty of the Contractor to call the Public Works Director's attention to apparent errors or omissions and request instructions before proceeding with the work. The Public Works Director may, by appropriate instructions, correct errors and supply omissions, which instructions shall be as binding upon the Contractor as though contained in the original Specifications or Plans.

B. Materials which will require testing and inspection at the place of origin shall not be shipped prior to such testing and inspection.

SAMPLES AND TESTS

Per MAG Specifications, Sections 106.2 and 106.3, including:

A. At the option of the Public Works Director, the source of supply of each of the materials shall be approved by him before the delivery is started and before such material is used in the work. Representative preliminary samples of the character and quality prescribed shall be submitted by the Contractor or producer of all materials to be used in the work for testing or examination as desired by the Public Works Director.

B. Sieves used in determining the grading of samples of aggregates, select material, and other graded materials, shall conform to ASTM Designation E 11-81.

LEGAL RELATIONS AND RESPONSIBILITY

LAWS TO BE OBSERVED

MAG Specifications, Section 107.1.

ALIEN LABOR

The Contractor shall comply with the Immigration Reform and Control Act of 1996.

COMPLIANCE WITH FEDERAL AND STATE LAWS

The Contractor understands and acknowledges the applicability to it of the Americans with Disabilities Act, the Immigration Reform and Control Act of 1986 and the Drug Free Workplace Act of 1989. The following is only applicable to construction contracts: The Contractor must also comply with A.R.S. §34-301, "Employment of Aliens on Public Works Prohibited", and A.R.S. §34-302, as amended, "Residence Requirements for Employees".

Under the provisions of A.R.S. §41-4401, Contractor hereby warrants to the City that the Contractor and each of its subcontractors ("Subcontractors") will comply with, and are contractually obligated to comply with, all Federal Immigration Laws and regulations that relate to their employees and A.R.S. §23-214(A) (hereinafter "Contractor Immigration Warranty").

A breach of the Contractor Immigration Warranty Shall constitute a material breach of this Contract and shall subject the Contractor to penalties up to and including termination of this Contract at the sole discretion of the City.

The City retains the legal right to inspect the papers of any Contractor or Subcontractors employee who works on this Contract to ensure that the Contractor or Subcontractor is complying with the

Contractor Immigration Warranty. Contractor agrees to assist the City in regard to any such inspections.

The City may, at its sole discretion, conduct random verification of the employment records of the Contractor and any of the subcontractors to ensure compliance with Contractor Immigration Warranty. Contractor agrees to assist the City in regard to any random verification performed.

Neither the Contractor nor any of the Subcontractors shall be deemed to have materially breached the Contractor Immigration Warranty if the Contractor or Subcontractor establishes that it has complied with the employment verification provisions prescribed by Sections 274A and 274B of the Federal Immigration and Nationality Act and the E-Verify requirements prescribed by A.R.S. §23-214, Subsection A.

The provisions of this Article must be included in any contract the Contractor enters into with any and all of its subcontractors who provide services under this Contract or any subcontract. "Services" are defined as furnishing labor, time or effort in the State of Arizona by building or transportation facility or improvement to real property.

EMPLOYMENT PROVISIONS

Subject to existing law, and regulations, illegal or undocumented aliens will not be employed by the Contractor for any work or services to be performed pursuant to this contract. The Contractor will ensure that this provision is expressly incorporated into any and all Subcontracts or subordinate agreements issued in support of this contract. Contractor agrees to comply with the provisions of Section 274A(a)(1)(A) and 274A(a)(2) of the Immigration and Nationality Act (8 U.S.C. 1324a(a)(1)(A), 1324a(a)(2)) (the "INA employment provisions"), and any amendments thereto, prohibiting the unlawful employment of illegal or undocumented aliens. Under the terms of this agreement, the contractor shall not knowingly hire or employ for any work performed pursuant to this contract any workers or employees not lawfully authorized to work under the provisions of the Immigration and Nationality Act or any other applicable federal or state laws. Violation of the provisions of this section shall be deemed a material breach of this contract.

INDEPENDENT CONTRACTOR STATUS

It is expressly agreed and understood by and between the parties that the Contractor is being retained by the City as an independent contractor, and as such the Contractor shall not become a City employee, and is not entitled to payment or compensation from the City or to any fringe benefits to which other City employees are entitled. As an independent contractor, the Contractor further acknowledges that he is solely responsible for payment of any and all income taxes, FICA, withholding, unemployment insurance, or other taxes due and owing any governmental entity whatsoever as a result of this Agreement. As an independent contractor, the Contractor further agrees that he will conduct himself in a manner consistent with such status, and that he will neither hold himself out nor claim to be an officer or employee of the City by reason thereof, and that he will not make any claim, demand or application to or for any right or privilege applicable to any officer or employee of the City, including but not limited to workmen's compensation coverage, unemployment insurance benefits, social security coverage, or retirement membership or credit.

NONDISCRIMINATION

The Contractor, with regard to the work performed by it after award and during its performance of this contract, will not discriminate on the grounds of race, color, national origin, religion, sex, disability or familial status in the selection and retention of subcontractors, including procurement of materials and leases of equipment. The Contractor will not participate either directly or indirectly in

the discrimination prohibited by or pursuant to Title VI of the Civil Rights Act of 1964, Section 504 of the Rehabilitation Act of 1973, Section 109 of the Housing and Community Development Act of 1974, the Age Discrimination Act of 1975, the Americans with Disabilities Act (Public Law 101-336, 42 U.S.C. 12101-12213) and all applicable federal regulations under the Act, and Arizona Governor Executive Orders 99-4, 2000-4 and 2009-09 as amended.

AMERICANS WITH DISABILITIES ACT

Contractor shall comply with all federal, state and local nondiscrimination statues in the operation, implementation and delivery of, including state and federal civil rights and disabilities laws. In particular the contractor shall ensure that the City 's obligations for program, facility and service accessibility in Title II of the Americans with Disabilities Act are complied with in all activities arising under this contract, and shall hold harmless the City for any and all loss, including but not limited to damages, costs or expenses, incurred or arising from any alleged violations of the Americans with Disabilities Act under the auspices of this contract unless resulting from an intentional or actual negligent act of the City and its employees. Failure to comply with the nondiscrimination or accessibility requirements herein shall be construed as nonperformance and may result in termination of funding, civil action or both.

PERMITS, TAXES AND LICENSES

MAG Specifications, Section 107.2, including: Except as otherwise provided in the Specifications, it is the duty of the Contractor to procure all permits and licenses, pay all charges and fees, and give all notices necessary and incident to the due and lawful prosecution of the work. All applicable permits, licenses and taxes are the responsibility of the Contractor.

PATENTED DEVICES, MATERIALS AND PROCESSES

MAG Specifications, Section 107.3.

SURVEY LAND MONUMENTS

Survey land monuments and property marks shall not be moved or otherwise disturbed by the Contractor until an authorized agent of the agency having jurisdiction over the land monuments or property marks setting, has witnessed or otherwise referenced their location, and only then in accordance with the requirements of the agency having jurisdiction. Any monuments displaced by the Contractor shall be replaced at the Contractors expense.

PROTECTION OF PERSON AND PROPERTY

MAG Specifications, Sections 107.5 through 107.10, including:

The Contractor shall confine all aspects of his operations within the construction limits as identified in the project plans. Should the Contractor contemplate the use of any private property adjacent to the project, beyond the project limits, for materials and equipment storage or to perform any work, he shall first obtain the written permission of the property owner. The Contractor shall provide a copy of the owner's permission to enter the property and for what purpose to the Public Works Director prior to entering the property. The Contractor will be fully and solely responsible for any and all adverse impacts and / or damages caused by his operations on private property and the settlement of all claims pertaining thereto. Upon completion of his operations the Contractor shall obtain a signed release from the property owner pertaining to his activities on the owner's property and provide a copy of that document to the Public Works Director. The failure of the Contractor to comply with these provisions will result in the retention of some portion of Contractor funds, payable under the contract, until such claims are resolved.

PROTECTION OF ANTIQUITIES

MAG Specifications, Section 107.4.

PERSONAL LIABILITY OF PUBLIC OFFICIALS

MAG Specifications, Section 107.13.

NON-RESPONSIBILITY OF THE CITY

Indebtedness incurred for any cause in connection with this work must be paid by the Contractor, and the City is hereby relieved at all times from any indebtedness or claim other than payments under terms of the Contract.

NO WAIVER OF LEGAL RIGHTS

MAG Specifications, Section 107.14.

PROPERTY RIGHTS IN MATERIAL

Nothing in the Contract shall be construed as vesting in the Contractor any right of property in materials used after they have been attached or affixed to the work or the soil and accepted. All such materials shall become the property of the City upon being so attached or affixed and accepted.

PAYMENT TO CONTRACTORS

GENERAL

A. The basis of payment for construction of this project shall be unit prices for all work actually performed in accordance with the Specifications and Scope of work, and shall include all labor and materials incorporated in the completed work.

B. Upon final inspection and acceptance of the work, the City will pay the Contractor the amount earned under the Contract, as provided herein.

PARTIAL PAYMENT

A. Once each month, the City Project Inspector and the Contractor's Superintendent shall meet or as necessary to jointly measure all work items under the contract to determine pay quantities for each pay period. Quantities of work items shall be documented on the respective plan sheets and separately in tabular fashion with Station to Station measurements noted to assure there is no duplication of payment for work performed. Measurements will be for work actually completed. No projections for expected completion of work will be allowed.

B. Contractor shall submit partial payment requests in a format approved by Public Works together with the City of Prescott Pay Request Application and Certification for Payment (form provided by Public Works) or equal, subject to approval by the Public Works Director.

C. The City will retain ten percent (10%) of the amount of each such estimate to insure full and faithful compliance with the terms of these contract documents. After fifty percent (50%) of the work on this project has been completed, one half (½) of the amount retained shall be paid to the Contractor provided the Contractor is making satisfactory progress on the contract and there is no specific clause or claim requiring a greater amount to be retained. After the contract is fifty percent (50%) completed, only five percent (5%) of the amount of any subsequent progress payments made under the contract shall be retained provided the Contractor is making satisfactory progress on the project, except that if at any time the City determines satisfactory

progress is not being made, ten percent (10%) retention shall be reinstated for all progress payments made under the contract subsequent to the determination.

D. The Contractor shall furnish a detailed breakdown showing unit prices and quantities for use in preparing the monthly estimate. No partial payment will be made until this breakdown is presented by the Contractor and has been reviewed and accepted by the Public Works Director. Green-lined plan sheets shall be submitted with each monthly pay request illustrating the line item quantities constructed for the period. The green-lined plan sheets and pay estimate spreadsheets must reconcile with one another.

E. No partial payment for job site delivered material will be made.

PAYMENT

For and in consideration of the faithful performance of the work, the City will pay to the Contractor the amount earned less retention as computed from the actual quantities of work performed under the Contract and to make such payment in the manner and at the time(s) specified, as follows:

A. After final completion under the Contract, the Contractor shall render to the City a final estimate, which shall show the amount of work performed according to the Contract.

B. Before the final payment will be made, the Contractor shall satisfy the City by affidavit that all bills for labor and materials incorporated in the work have been paid. See CONTRACTOR'S AFFIDAVIT REGARDING SETTLEMENT OF CLAIMS AND CERTIFICATION OF COMPLETION OF WARRANTIES, page 27. Additionally, the Contractor shall furnish lien waivers for all completed labor and materials consumed during the project.

C. Final payment constituting the entire unpaid balance of the Contract sum (including all retained moneys) shall be paid by the City to the Contractor within sixty (60) days after completion of the work or filing the Notice of Completion of the Contract unless a specific written finding by the City of the reasons justifying the delay in payment is provided to the Contractor, and further provided that all work has been completed, the Contract fully performed, and any final certificate has been issued by the City's architect, if any. Prior to the final payment to the Contractor, the City shall deduct therefrom any and all unpaid privilege, license and other taxes, fees and any and all other unpaid moneys due the City from the Contractor, and shall apply to those moneys to the appropriate account. Contractor shall provide to the City any information necessary to determine the total amount(s) due. The quantities appearing in the Bidding Schedule are approximate only, and are prepared for the comparison of bids. Payment to the Contractor will be made only by actual quantities of work performed and accepted in accordance with the requirements of the Contract. Only the items listed in the Bidding Schedule are pay items. The scheduled quantities of work to be done and materials to be furnished may each be increased, decreased or omitted.

D. **Final project As-built plans shall verify line item quantities constructed for the project by individual plan sheet.** Contractor shall submit final payment request in a format approved by Public Works together with the City of Prescott Pay Request Application and Certification for Payment (form provided by Public Works).

PAYMENT OF ITEMS IN PROPOSAL

A. Only those items listed in the Proposal under Bidding Schedule are pay items.

B. Compensation for all work necessary for the completion of the project or improvement shall be included by the bidder in the price bid for the items shown in the Proposal.

CHANGES IN THE WORK

A. The City, without invalidating the Contract, may order extra work, make changes by altering, or delete any portion of the work as specified herein, or as deemed necessary or desirable by the Public Works Director. All such work shall be executed under the conditions of the original Contract except that any claim for extension of time and additional cost caused thereby shall be adjusted at the time of ordering such change or extra work.

B. Extra work shall be that work not indicated or detailed on the Plans and not specified. Such work shall be governed by all applicable provisions on the Contract Document.

C. In giving instructions, the Public Works Director shall have authority to make minor changes in the work, not involving extra cost, and not inconsistent with the purposes of the work, but otherwise, except in an emergency endangering life or property, no extra work or change shall be made unless in pursuance of a written order by the Public Works Director, and no claim for an addition to the total amount of the Contract shall be valid unless so ordered. It is mutually understood that it is inherent in the nature of municipal construction that some changes in the Plans and Specifications may be necessary during the course of construction to adjust them to field conditions, and that it is of the essence of the Contract to recognize a normal and expected margin of change. The Public Works Director shall have the right to make such changes, from time to time, in the Plans, in the character of the work, and in the termination of the completion of the work in the most satisfactory manner without invalidating the Contract.

D. Any change ordered by the Public Works Director which involves installation of work essential to complete the Contract, but for which no basis of payment is provided for herein, said payment therefore shall be subject to agreement prior to said work being performed.

E. The prices agreed upon and any agreed upon adjustment in Contract time shall be incorporated in the written order issued by the Public Works Director, which shall be written so as to indicate acceptance on the part of the Contractor as evidenced by his signature. In the event prices cannot be agreed upon, the City reserves the right to terminate the Contract as it applies to the items in questions and make such arrangements as it may deem necessary to complete the work, or it may direct the Contractor to proceed with the items in question to be reimbursed pursuant to the unit prices in the Contractor's bid or on a force account basis as provided hereinafter, at the City's option.

FORCE ACCOUNT

The compensation for force account work performed by the Contractor shall be approved by the Public Works Director in the following manner:

A. LABOR: The Contractor shall provide monthly certified payroll reports for all labor and for foremen in direct charge of the specific operations. The Contractor will be compensated as follows:

   1. The actual cost of wages paid by him but at rates not to exceed those for comparable labor currently employed on the project as determined by Public Works Director.

   2. The actual cost of social security taxes and unemployment compensation insurance. There will be no payment for Fringe Benefits unless mandated by Federal Law on Federally funded projects.

   3. An amount equal to fifteen percent (15%) of the actual cost of wages and other costs listed above to cover the Contractor's profit and overhead.

4. In case work is performed by a subcontractor, the said fifteen percent (15%) will be added only once to the actual cost of the work, however, the Contractor may add five percent (5%) to the Subcontractor's price to cover his own overhead and supervision.

B. TOOLS AND EQUIPMENT: For any special or heavy equipment, the use of which has been authorized by the Public Works Director, except for small tools and manual equipment, the Contractor shall be reimbursed his actual cost of rental, not to exceed the latest Schedule of Equipment Rental Rates published by the Arizona Department of Transportation. In the event that any of the equipment to be used is not shown in said schedule, the rental rate for such equipment shall be as agreed upon in writing before the work is started. No percentage shall be added to equipment rental rates. In the event said special or heavy equipment is owned by the Contractor, he shall be compensated only for the actual hours said equipment is required for the work under Force Account on the job site, at a rate not to exceed the latest ADOT. Schedule of Equipment Rental Rates.

C. MATERIALS: For all materials accepted by the Public Works Director and used in the work the Contractor shall be paid the actual cost of such material, including transportation charges, to which cost shall be added a sum equal to fifteen percent (15%) thereof.

D. SUPERVISION OVERHEAD AND HOME OFFICE OVERHEAD: No allowance shall be made for general superintendence. The cost of supervision and all overhead is presumed to be included in the fifteen percent (15%) added in accordance with the above.

E. RECORDS: The Contractor's representative and the Public Works Director shall compare the records of the work performed as ordered on a force account basis at the end of each day on which such work is performed. Copies of these records shall be made on suitable forms provide for this purpose and signed by both the Public Works Director and the Contractor's representative. All claims for work done on a force account basis shall be certified and submitted to the Public Works Director by the Contractor, and such statements shall be filed with the Public Works Director not later than the fifth (5th) day of the month following that in which the work was actually performed.

F. BONDS AND INSURANCE: The Contractor shall be paid the actual cost for additional bonding and insurance pertaining to Force Account work when the Contractor can provide evidence of additional payment for premiums on required payment and performance bonds. No duplication of payment for Contractors costs associated with labor costs above will be allowed.

G. The Public Works Director authorized representative is in charge of Force Account Work and has the authority to direct which labor and equipment will be used, to suspend operations, and to refuse to pay for any labor or equipment, which he feels is not doing productive work.

EXTRA WORK

New or additional work will be classed as extra work when determined by the Public Works Director that such work is not covered by the Contract.

CONTRACT AMENDMENT

The value of such work or change shall be determined and paid for with a Contract Amendment in one of the following ways according to the Contract Amendment Procedure set down by the Public Works Department, City of Prescott, and at the option of the City:

A. As may be mutually agreed upon by the City and the Contractor.

B. By unit prices in accordance with the Contractor's bid.

C. By lump sum based upon the Contractor's estimate and the Public Works Director's review and acceptance of the estimate.

D. By Force Account in accordance with the requirements of that section.

E. The Contractor shall do such extra work and furnish material and equipment therefore upon receipt of an accepted Contract Amendment or other written order of the Public Works Director. In no case shall work be undertaken without written notice from the Public Works Director to proceed with the work. In absence of such Contract Amendment or other written order of the Public Works Director, the Contractor shall not be entitled to payment for any extra work. All contract amendments must be approved by the Public Works Director. Contract Amendments over $10,000.00 must be approved by City Council.

F. In the event that the Contractor and the City cannot agree on the compensation to be paid to the Contractor prior to the issuance of a Contract Amendment, then and in that event the City has the option of terminating the Contract with the Contractor or directing the Contractor to proceed and to receive compensation pursuant to the Force Account provisions herein. In the event that this Contract is terminated by the City pursuant to this subsection, the Contractor shall only be paid for those services performed to date of the City's Notice of Termination, said payment to be based upon the unit prices as set forth in the Contractor's bid. In no event shall the Contractor be entitled to additional compensation for lost profits, mobilization or de-mobilization costs, loss of anticipated profits, extended overhead, unabsorbed home office overhead, or any other payments other than for work actually performed as based upon unit prices. In the event that there are no unit prices pertaining to work in question, then and in that event the Contractor's compensation for early termination pursuant to this subsection shall be based upon Force Account as here-in-before described.

G. It is expressly agreed that in the event of a Contract Amendment, any compensation due the Contractor shall be set forth in the Contract Amendment, and shall be considered full and complete payment (if any) for any and all work related costs, including but not limited to labor, materials, equipment, supervision, field office overhead, extended home office overhead, unabsorbed home office overhead, taxes, bonds, insurance and profits. Additionally, the Contractor shall not be entitled to any additional compensation based upon a Contract Amendment (or the accumulation of contract amendments) unless specifically set forth in that Contract Amendment.

H. In the event that the contractor submits a proposed Contract Amendment, the Public Works Director shall have ten (10) days after receipt of the Contractor's written proposed Contract Amendment to either accept or agree to the Contract Amendment under the above provisions or deny such proposed Contract Amendment. If necessary to assess the proper purpose and function of a Contractor's proposed Contract Amendment, because of the proposed Contract Amendment's complexity or scope, the Public Works Director may either accept and agree to the Contract Amendment of deny such proposed Contract Amendment under the above provisions beyond such ten (10) day period and for an additional reasonable period commensurate with the nature of the proposed Contract Amendment. The failure of any party to take any action within the time periods or in the manner specified in the subparagraph shall be deemed a waiver of that party's right to recover for such delay in acting.

CLAIMS FOR EXTRA WORK

If the Contractor claims that any instructions involve extra cost under this Contract, he shall give the Public Works Director written notice thereof within forty-eight (48) hours after the receipt of such

instructions, and in any event before proceeding to execute the work, except in emergency endangering life or property, and the procedure shall then be as provided for under CHANGES IN THE WORK. No such claim shall be valid unless so made.

PARTIAL ACCEPTANCE OF WORK

A. After completion of certain units of work under this Contract, including all testing and other preparation necessary for operation of the unit by the City as herein specified, but prior to final project completion, provisions may be made for partial acceptance in writing by the City for these certain units only. The units to be included for partial acceptance prior to final project completion will be noted at the time of the pre-construction conference in accordance with Contractor's schedule, or by written notice to the Contractor at the earliest possible time.

B. The guarantee period for these units shall commence with the date of final acceptance of the entire project by the City. Full payment for these units will not be made until final acceptance of the total work is made.

C. Acceptance of any portion of the project prior to acceptance of the whole shall not be construed as absolving the Contractor of responsibility for any item of construction or incidental work included in the original Contract.

NOTIFICATION OF CHANGED CONDITIONS, FORMAL PROTEST AND DISPUTE RESOLUTION

MAG 110 as modified herein:

110.2.2(A) and 110.3.2, add the following: "In providing the information required by this section, the Contractor shall provide specific factual detail as to each item and show the methods of calculating each item."

110.3.1 shall be amended as follows:

Level I shall mean the Public Works Project Manager as appointed by the Public Works Director

Level II shall mean the Public Works Division Manager as appointed by the Public Works Director

Level III shall mean the Public Works Director

In the event of litigation, the parties hereby agree to submit to a trial before the Court. The Contractor further agrees that this provision shall be contained in all subcontracts related to the project, which is the subject of this Agreement.

The parties hereto expressly covenant and agree that in the event of litigation arising from this Agreement, neither party shall be entitled to an award of attorney fees, either pursuant to the Contract, pursuant to A.R.S. § 12-341.01 (A) and (B), or pursuant to any other state or federal statute. The Contractor further agrees that this provision shall be contained in all subcontracts related to the project that is the subject of this Agreement.

110.4 The last sentence of the first paragraph shall read: "The arbitration of claims shall be conducted either in Prescott or Phoenix, Arizona as agreed to by the parties, or if the parties cannot agree, to be determined by the arbitrator, taking into consideration the convenience and costs to the parties and their witnesses."

Delete the last two sentences of the section and replace with: "The decision or award of the arbitrator shall be nonbinding."

Any resolution of a dispute in accordance with the applicable sections of MAG110 and this Contract which causes the Contract amount to be exceeded by $10,000.00 or more shall not be final until approved by the City Council.

PUBLICITY RELEASES

The Contractor and their subcontractors and their suppliers, if any, shall not reveal to others through literature, brochures, or other types of publicity releases any information regarding the work or the Contractors activities or participation on the project without prior written approval from the City Public Works Director. Any and all jobsite photographs taken by the Contractor, subcontractor or others must be processed in duplicate form with copies provided to the Public Works Director. No project photographs shall be released to others without prior written approval of the Public Works Director.

SCOPE OF WORK

INTENT OF PLANS AND SPECIFICATIONS

A. The intent of the Specifications and Scope of Work is to prescribe a complete work for the CITY OF PRESCOTT: Autumn Breeze Street Improvement Project which the Contractor shall perform in a manner acceptable to the City Public Works Director and in full compliance with the terms of the Contract.

B. Unless otherwise specified in the Special Conditions, the Contractor shall furnish all materials, labor, tools, equipment, water, light, power, transportation, superintendence, temporary construction of every nature, and incidentals, including, but not limited to, dust and traffic control measures, and to perform all work involved in executing the contract in a satisfactory and workmanlike manner within the specified time.

PROJECT DESCRIPTION AND LOCATION

This project generally consists of installing a valley gutter, curbcut, grading and drainage ditch and adding inlet wings to the existing catch basin.

TIME OF COMPLETION

A. The Contractor shall commence the work under this contract on or before the tenth (10th) calendar day after receiving written Notice to Proceed from the Owner. The Contractor shall fully complete all work under this contract within thirty (30) calendar days beginning with the calendar day of receipt of the Notice to Proceed. The Contractor shall at all times during the continuance of the Contract prosecute the work with such work force and equipment as is sufficient to complete the project within the time specified.

B. Project Milestones are estimated to be as follows:

Award of Contract	Week of June 7, 2016
Pre-Construction Meeting	Week of June 9, 2016
Notice to Proceed	Week of June 13, 2016
Expected Completion Date	Week of July 13, 2016

All milestones are "earliest" dates for planning purposes only, and shall not represent any contractual commitment whatsoever on the part of the City.

SUPPLEMENT TO THE MARICOPA ASSOCIATION OF GOVERNMENTS (MAG) UNIFORM STANDARD SPECIFICATIONS AND DETAILS FOR PUBLIC WORKS CONSTRUCTION

Technical Specifications

March 22, 2016

City of Prescott Public Works
433 N. Virginia Street, Prescott, Arizona 86301
Ph: 928.777.1130 | TDD: 928.777.1100 | Fax: 928.771.5929

TABLE OF CONTENTS

100.1 SCOPE OF WORK 4
100.2 STANDARD SPECIFICATIONS & DRAWINGS 4
100.3 GENERAL NOTES 4
100.4 PUBLIC RELATIONS 6
101.1 DEFINITIONS AND TERMS 8
104.1.4 CLEANUP AND DUST CONTROL 8
105.6 COOPERATION WITH UTILITIES 8
105.8 CONSTRUCTION STAKING 9
105.16 AS-BUILT PREPARATION AND COORDINATION 11
106 CONTROL OF MATERIALS 13
106.2 SAMPLES AND TESTS OF MATERIALS 13
106.9 QUALITY ACCEPTANCE TESTING 16
107.6 PUBLIC CONVENIENCE AND SAFETY 17
107.9 PROTECTION AND RESTORATION OF PROPERTY AND LANDSCAPE 18
107.15 STORM WATER POLLUTION PREVENTION PLAN (SWPPP) 18
108.4 CONSTRUCTION SCHEDULE 19
109.10 PAYMENT FOR MOBILIZATION/DEMOBILIZATION 20
109.11 CONTRACT ALLOWANCE 20
200.1 DEWATERING 21
200.2 BY-PASS PUMPING 21
201 CLEARING AND GRUBBING 23
205 ROADWAY EXCAVATION 24
205.2 UNSUITABLE MATERIAL 25
206 STRUCTURE EXCAVATION AND BACKFILL 25
211 FILL CONSTRUCTION 26
306 MECHANICALLY STABILIZED SUBGRADE – GEOGRID REINFORCEMENT 28
310 PLACEMENT AND CONSTRUCTION OF AGGREGATE BASE COURSE 28
317 ASPHALT MILLING 29
321 ASPHALT CONCRETE PAVEMENT 32
329 TACK COAT 38
336 PAVEMENT MATCHING AND SURFACING REPLACEMENT 39
340 CONCRETE CURB, GUTTER, SIDEWALK, SIDEWALK RAMPS, DRIVEWAY, & ALLEY ENTRANCE 40
345 ADJUSTING FRAMES, COVERS, VALVE BOXES, WATER METER BOXES AND PULL BOXES 42
350 REMOVAL OF EXISTING IMPROVEMENTS 44
350.6.1 REMOVAL AND DISPOSAL OF ASBESTOS CEMENT PIPE 46
401 TRAFFIC CONTROL 49
402.2 THERMOPLASTIC PAVEMENT MARKINGS 51
402.3 TEMPORARY STRIPING 51
402.4 PERMANENT PAVEMENT MARKINGS 51

403.1 PERMANENT SIGNING, SIGN POSTS AND DELINEATORS 51
404 LOOP DETECTORS 53
405 MONUMENTS: 53
430 LANDSCAPING AND PLANTING 54
431 REMOVE AND REPLACE LANDSCAPE ROCK 57
505 CONCRETE STRUCTURES 57
505.1.1A CONCRETE DRAINAGE OUTLET/STRUCTURE 58
505.1.1B CONCRETE HEADWALL 58
505.1.1C CONCRETE CATCH BASIN 58
505.1.1D SCUPPER 58
505.1.1E CONCRETE RETAINING WALL 58
601 TRENCH EXCAVATION, BACKFILLING AND COMPACTION 58
601.2.11 ROCK EXCAVATION FOR UTILITY AND/OR DRAINAGE CONSTRUCTION 59
610 WATER MAIN CONSTRUCTION 61
610.9 FIRE HYDRANTS 63
610.11 METER SERVICE CONNECTIONS 63
610.15 TESTING 66
615.1 SEWER LINE CONSTRUCTION 66
615.7 SANITARY SEWER SERVICE 67
618 STORM DRAIN CONSTRUCTION 71
625 MANHOLE CONSTRUCTION AND DROP SEWER CONNECTIONS 71
626.1 MANHOLE COATINGS 74
630.3 GATE VALVES 78
630.4 TAPPING SLEEVES AND VALVES 79
630.6 AIR RELEASE, COMBINATION VALVES, AND BLOW OFF ASSEMBLY 80
650 ABANDONMENT AND REMOVAL OF WATER MAIN 82
651 ABANDONMENT AND REMOVAL OF SANITARY SEWER 83
710 ASPHALT CONCRETE 85
725 PORTLAND CEMENT CONCRETE 86

TECHNICAL SPECIFICATIONS

ADD the following Sections:

100.1 SCOPE OF WORK

A. **Intent of Plans and Specifications:**

1. The intent of the Specifications and Scope of Work is to prescribe a complete work for the Project which the Contractor shall perform in a manner acceptable to the City of Prescott and in full compliance with the terms of the Contract.

2. Unless otherwise specified in the Special Conditions, the Contractor shall furnish all materials, labor, tools, equipment, water, light, power, transportation, superintendence, temporary construction of every nature, and incidentals, including, but not limited to, dust and traffic control measures, and to perform all work involved in executing the contract in a satisfactory and workmanlike manner within the specified time.

3. The Engineer shall be that person or his designees employed by or contracted by the City Of Prescott responsible for all aspects of the project and with the authority to make revisions to and approve changes to the plans or specifications.

B. **Project Description and Location:**

1. The Project description and location are as noted in the contract documents and plans.

C. **Time of Completion:**

1. The Contractor shall commence the work under this contract on or before the tenth (10th) calendar day after receiving written Notice to Proceed from the Owner. The Contractor shall fully complete all work within the calendar days allowed for in the contract, in accordance with the date set forth in the Notice to Proceed. The Contractor shall at all times during the continuance of the Contract prosecute the work with such work force and equipment as is sufficient to complete the project within the time specified.

100.2 STANDARD SPECIFICATIONS & DRAWINGS

A. Standard details and specifications for this project shall be the Maricopa Association of Governments Standard Specifications and Details (MAG Standards), latest revision, and the City of Prescott Supplement to the Maricopa Association of Governments Uniform Standard Specifications for Public Works, latest revisions, in conjunction with the City of Prescott Standard Details, latest revisions, except as modified in the plans.

B. Other standard specifications and details will be incorporated within the plans, project documents and technical specifications by reference, as necessary. These may include references to Maricopa Association of Governments Uniform Standard Details for Public Works Construction (MAG Standard Details, Arizona Department of Transportation Standard Specifications and Standard Drawings for Road and Bridge Construction (ADOT Specifications or ADOT Standard Details), and others.

100.3 GENERAL NOTES

A. All construction shall conform to the Maricopa Association of Governments Standard Specifications and Details (MAG Standards), latest revisions, and City of Prescott Supplement to MAG Specifications (COP Specifications) and City of Prescott (COP) Standard Details, latest revisions, unless specifically modified on the plans.

B. It shall be the Contractor's responsibility to obtain copies of MAG, and COP Standards and

Specifications as well as all other standards and specifications necessary to completely and accurately interpret the plans.

C. All plans signed by the Public Works Director are null and void one year from date of signature if construction has not started.

D. All quantities shown on plans are not verified by the Engineer. The Contractor shall verify all quantities shown and make his bid based upon those verifications. If any discrepancy in quantities is found, Contractor shall notify the Engineer of such no later than 24 hours prior to bid opening.

E. A City of Prescott Public Works Department permit will be required for all off-site construction and construction within the public right of way.

F. It is the sole responsibility of the Contractor to obtain, at his own expense, such permits as are required from the appropriate agencies.

G. The Public Works Department shall be notified a minimum of 24 hours prior to beginning any construction in the public right of way at (928) 777-1640.

H. Inspection is to be done by the City of Prescott Public Works Department.

I. Any work performed without the knowledge of the City of Prescott inspector or his representative is subject to removal and replacement of same, to be done at the Contractor's expense.

J. All work and materials, which do not conform to the specifications, are subject to removal and replacement at the Contractor's expense.

K. Approval of a portion of the work in progress does not guarantee its final acceptance. Testing and evaluation may continue until the written final acceptance of a complete and workable unit.

L. The City of Prescott may suspend the work by written notice when, in its judgment, progress is unsatisfactory, work being done is unauthorized or defective, weather conditions are unsuitable, or there is a danger to the public health and safety.

M. The Contractor shall provide sufficient men and equipment on the job at all times during construction to comply with specifications and to complete work.

N. Contractor shall be responsible for construction surveying and layout.

O. The Contractor shall notify "Blue Stake" at 811 or 1-800-782-5348 at least 48 hours prior to construction.

P. It is the Contractor's responsibility to locate all underground pipelines, telephone and electric conduits and structures in advance of any construction and will observe all possible precautions to avoid any damage to such. The Engineer and/or City will not guarantee any locations as shown on these plans, or those omitted from it.

Q. The Contractor is to uncover all existing lines being tied into and verify grades, pipe material, and pipe diameter before material submittals and planned construction activities.

R. Arizona Department of Environmental Quality Requirements shall be complied with.

S. All water lines shall be provided with 14 AWG HS-CCS wire. Trace wire shall be subject to traceability test.

T. Water/sewer separation shall be pursuant to AAC R-18-5-502C and COP specifications.

U. Water mains shall be subject to a pressure and leakage test in accordance with AWWA C-600 Standard.

V. Water mains shall be disinfected in accordance with ADEQ Engineering Bulletin No. 8 "Disinfection of Water Systems".

W. Operation of valves to be done by City personnel only.

X. All pipeline materials shall be installed per manufacturer's requirements unless superseded by COP specifications.

Y. All materials for water line construction shall meet AAC R-18-4-119.

Z. Arizona Department of Environmental Quality requirements will apply when more stringent than MAG Standard Specifications; more specifically where they pertain to maximum allowable sewer line/pressure sewer line exfiltration-infiltration rates.

AA. Sewer line low-pressure air tests shall be done on 100% of all lines.

BB. Sewer manholes exfiltration tests shall be done on 100% of all manholes. Vacuum testing in accordance with City of Prescott Standards may be used in lieu of exfiltration test.

CC. Sewer line deflection tests shall be done on 100% of all pipes.

DD. Prior to project acceptance, the Contractor shall be responsible for providing the City of Prescott with video (DVD) of the entire sewer main installed including service laterals. The video will be previewed and deemed acceptable by the City prior to project release.

EE. Acceptance of the completed water/sewer system will not be given until 3 ml photo Mylar or Xerox graphic "as-built" reproducible plans and all required digital files have been submitted by a Registered Professional Engineer and approved by the Engineer.

FF. Contractor shall warrant all work for a minimum of two years after formal acceptance of the work.

100.4 PUBLIC RELATIONS

Description:

The Contractor shall be required to furnish a private telephone line to be used solely for receiving incoming calls from local citizens with questions or complaints concerning construction operations or procedures. The Contractor shall be required to publish this telephone number and maintain a 24-hour answering service. The answering service shall be manned by Contractor personnel during all hours during the course of construction that there is work being performed on this project. The Contractor shall maintain a log of incoming calls, responses, and action taken, which shall be submitted to the Engineer weekly and on request.

The Contractor shall retain the services of a community relations organization for this project. The Contractor shall submit for approval, to the Engineer, the resume of the proposed community relations organization. Included in the resume shall be the names and credentials of the staff. The community relations organization shall be proactive and knowledgeable in the means and effectiveness of various notification techniques. The Engineer will rely on the organization's experience and suggestions in the presentation of information to the public. The Engineer will review the resume and possibly interview the organization. The Engineer will notify the Contractor within ten calendar days of the acceptability of the community relations organization. Upon notification by the Engineer of an acceptable community relations organization, the Contractor shall hire the organization.

The community relation organization's activities shall include, but not necessarily be limited to:

1. Printing and distribution of public notices.
2. Providing media news releases after review by the Engineer.
3. Planning and attending other public meetings as required by the Engineer.
4. Planning or otherwise participating in the Dedication Ceremonies as requested by the Engineer.
5. Possess the means for the development and fabrication of newsletters, notices, posters and demonstration boards.
6. Providing telephone "Hot Line" 24-hour service.

A pre-construction meeting will be scheduled between the Engineer and the Contractor to specifically address the hiring of a community relations organization. This meeting will be scheduled as soon as possible after the Award. The intent is to have a community relations organization on board prior to the

pre-construction meeting, a meeting in which the community relations organization will have an important participatory role.

The community relations organization shall develop a community relations program. The program shall include but not necessarily be limited to:

A. Distributing a pre-construction information letter to all residents, businesses, schools and churches within an area determined by the Engineer, which shall contain, as a minimum, the following information:

    1. Name of contractor.
    2. A 24-hour informational telephone number.
    3. Brief description of project.
    4. Names of project manager and superintendent (contractor).
    5. Name of project engineer (Public Works Department).
    6. Construction schedule including anticipated work hours.
    7. Traffic regulations including lane restrictions.
    8. Time and place for the pre-construction meeting. This notification shall be delivered a minimum of five working days prior to the meeting.

B. Holding a pre-construction community meeting with affected neighbors, businesses, schools, churches, etc., as directed by the Engineer.

C. Scheduling and conducting progress meetings, as required, with the affected business tenants and property owners.

D. Printing and mailing of public notices and/or newsletters, including a list of the names, addresses and receipt of postage or delivery for recipients of these newsletters and/or notifications.

E. Holding other public meetings as required by the Engineer.

F. The community relations organization shall use the means (Items A through E) or others to inform the local citizens of operations which may create changes to the norm such as high noise levels, road closures, limited access, haul routes, changes to material delivery routes, unusual hours of construction, disruption of bus routes or changes to other passenger delivery/pick-up routes.

G. Newsletters shall be distributed each month. A final draft shall be submitted to the Engineer for review and approved at least two days before the planned distribution. Each distribution area shall be approved by the Engineer. Each distribution shall include twelve copies for the Engineer.

H. The community relations organization shall keep daily personnel time logs which shall include the name of the employee, date of work, amount of time worked, description of work performed and project number.

Measurement and Payment:

The bid schedule includes an allowance for Public Relations for the purpose of encumbering funds to cover the cost of Public Relations. The amount of the allowance is determined by the Engineer and is not subject to individual bid pricing. All bidders shall incorporate the amount pre-entered in the bid proposal and shall reflect the same in the total bid for this project.

It shall be understood that this allowance item is an estimate only. The allowance shall not be used

without approval of the Engineer, and in no case exceed the allowance.

Reimbursement for Public Relations shall be based on the community relations organization invoice cost, plus an allowable markup to the prime contractor of 15%, for those services approved by the Engineer.

Pay Item: 100.4 Public Relations Allowance

101.1 DEFINITIONS AND TERMS

REPLACE the definition of Engineer with the following:

The Engineer shall be that person or his designees, subordinate to the Public Works Director, employed by or contracted by the City Of Prescott responsible for all aspects of the project and with the authority to make revisions to and approve changes to the plans or specifications.

104.1.4 CLEANUP AND DUST CONTROL

ADD the following:

A. The work under this item shall consist of applying water required for dust control per MAG Specifications and as modified herein.

B. If in the opinion of the Engineer the Contractor fails to keep dust for his operation under control, the Engineer may order by written order suspension of operations until the situation is remedied. No time extension or additional costs will be allowed for this suspension.

C. All contractors requesting construction water from the City must submit a Construction Water Meter Application to the Public Works Department. A $1,000 deposit will be required for hydrant meters. If construction water use occurs during the months of May through September the Contractor shall also include a dust abatement program. Potable water may not be allowed for dust abatement during these months. Potable water can be used to process embankment fill and base materials year round. However, contractors are encouraged to use treated effluent for construction activities. The City of Prescott has two outlets for effluent, the Sundog Wastewater Treatment Plant and the Airport Wastewater Treatment Plant. The City will provide metered standpipes for effluent at both plants. The Contractor will be required to estimate daily and total potable/effluent water usage for the project as identified on the Construction Water Meter application. The Contractor will be responsible for all costs associated with obtaining and delivering construction water.

Measurement and Payment:

No separate measurement or payment shall be made for dust control. This work shall be considered incidental and included in the unit price bid for construction of the appropriate contract pay items.

104.1.5 Final Cleaning Up:

ADD the following:

Upon completion of construction and before Final Acceptance can be made by the Engineer, the Contractor shall clean up each individual construction area to the satisfaction of the Engineer. Small trees, weeds, and brush, which were removed as part of construction work, shall be removed from the project site and properly disposed of. All debris, broken pipe, concrete and other construction debris shall be removed from the project site and properly disposed.

Mailboxes and traffic signs removed during construction shall be reinstalled in “like kind” and shall be considered incidental to the unit prices for utility work included in the bidding schedule.

105.6 COOPERATION WITH UTILITIES

ADD the following:

A. Location of Underground Utilities

1. Contractor shall contact Blue Stake within the time frame specified under Blue Stake law and request field location of underground utilities. At the time these locations have been marked and prior to the commencement of excavation within the affected area, the Contractor shall at his expense manually determine the exact location of all buried facilities.

2. Contractor shall notify all affected utilities prior to the start of construction and shall ascertain the location of the various underground utilities either shown on the plans and/or as may be brought to his attention.

3. Contractor shall perform all operations in accordance with Arizona Blue Stake law.

4. Utility locations shown on the plans are approximate and based on drawings furnished by the respective utility. It shall be the Contractor's responsibility to protect all existing utilities. Should a utility conflict occur, the Contractor shall cooperate with the said utility to resolve the conflict. No claim for extra costs shall be made against the Owner for delays due to any utility conflict.

5. If performance of the Contractor's work is delayed because the utility owners fail to relocate or adjust their facilities in a timely manner, the Contractor may file for an extension of time. To receive consideration, this request shall contain specific information as to the nature of the delay and the actual loss of time involved.

6. Contractor shall assume full responsibility for damage to all marked utilities due to his operations and shall repair the damaged utilities in accordance with regulatory authority requirements at his own expense.

Measurement and Payment:

No separate measurement and payment shall be made for Location of Underground Utilities. This work shall be considered incidental and included in the unit price bid for construction or installation of the appropriate contract pay items.

105.8 CONSTRUCTION STAKING

Replace Section 105.8 in its entirety with the following:

A. Construction staking shall be the responsibility of the CONTRACTOR. The control for the project is provided in the CONTRACT DOCUMENTS. The CONTRACTOR shall be held responsible for preservation of control monumentation. If any of the control monumentation have been carelessly or willfully destroyed or disturbed by the CONTRACTOR, the cost of replacing them will be charged against him and will be deducted from the payment of work.

B. The CONTRACTOR shall not retain the ENGINEER of Record for construction staking due to conflict of interest.

C. Staking shall be performed and certified by a Registered Land Surveyor in good standing with the Arizona State Board of Technical Registration.

D. Field notes and record drawings shall be provided to the ENGINEER.

E. The staking shall be performed in such a manner and frequency that the CONTRACTOR is able to construct the project in accordance with the plans and specifications. At a minimum, staking shall include

1. Slope or limit stakes (TCE).

2. Alignment of Pipeline.

3. Valves, bends, blow offs, air release valves, tracer wire stations, water meters and hydrant locations.

4. Horizontal and vertical bend locations.

5. Tank and appurtenances.

6. Electrical, instrumentation and control facilities, including, but not limited to, antennae pole.

7. Site improvements including, but not limited to, retaining walls, curbs, fencing, drainage, chain link fence enclosures, protection posts, gates, etc. The original grade of all retaining walls shall be surveyed and established prior to beginning any earthwork.

8. Cross-sections will be required, at no additional expense to the City, should quantity disputes arise pertaining to the following: Earthwork, Sub-grade, ABC or Asphaltic Concrete.

9. Curb stakes at all PC's, PT's, Vertical PI's (grade breaks), Transitions to and from Super Elevated sections and at 50 foot intervals.

10. Blue top of Sub-grade and ABC at intervals specified for curb. Quarter crown blue tops shall be required when the typical section is four lanes or more without median curb.

11. Other staking as needed to complete the work in conformance with the plans and specifications.

F. The ENGINEER and the CONTRACTOR's Superintendent shall meet monthly or as necessary to jointly measure all work items under the contract to determine pay quantities for each pay period. Quantities of work items shall be documented on the respective plan sheets and separately in tabular fashion with Station to Station measurements noted to assure there is no duplication of payment for work performed. Measurements will be for work actually completed. No projections for expected completion of work will be allowed.

G. All survey data will be as noted below.

SURVEY DATUM REQUIREMENTS

CITY OF PRESCOTT SURVEY DATUM REQUIREMENTS	
COORDINATE UNITS:	International Feet
DISTANCE UNITS:	International Feet
HEIGHT UNITS:	International Feet
DATUM	
GEODETIC (HORIZONTAL) DATUM:	North American Datum of 1983 (1992), (NAD83 (1992))
COODINATE SYSTEM:	Arizona Coordinate System (State Plane)
ZONE:	Central (0202)
VERTICAL DATUM:	North American Vertical Datum of 1988, (NAVD88)
GEOID MODEL:	GEOID99 (Conus)
CITY OF PRESCOTT COORDINATE SYSTEM (COPCS) – CONVERSION FROM STATE PLANE	
COPCS NORTHING=	(State Plane Northing x 1.000329975) – 701,456.0090

COPCS EASTING=	(State Plane Easting x 1.000329975) + 69,457.2499
Note: Distances computed between COPCS coordinates approximate "ground" distances	
STATE PLANE – CONVERSION FROM CITY OF PRESCOTT COORDINATE SYSTEM	
STATE PLANE NORTHING=	(COPCS Northing + 701,456.0090) x 0.999670134
STATE PLANE EASTING=	(COPCS Easting – 69,457.2499) x 0.999670134

EXAMPLE - CITY OF PRESCOTT MINGO BASE		
LATITUDE	34°34'29.27969" N	
LONGITUDE	112°28'48.72638" W	
HEIGHT	5582.412'	
STATE PLANE COORDINATES		**CITY OF PRESCOTT COORDINATES**
NORTHING	1,301,026.703	600,000.0000
EASTING	530,367.742	600,000.0000
ELEVATION	5,673.955'	5,673.955'

Measurement and Payment

The quantity of "Construction Staking" measured for payment shall be the lump sum bid by the CONTRACTOR. The contract unit price per lump sum paid for "Construction Staking" shall be full compensation for all labor, materials, and equipment to perform the construction staking as described in this section.

Pay Item: 105.8 Construction Staking

ADD the following Section:

105.16 AS-BUILT PREPARATION AND COORDINATION

A. As-built data and preparation will be performed by the ENGINEER. The CONTRACTOR shall notify the ENGINEER as required in this Section, provide access to the work, and cooperate with the ENGINEER to accurately depict the as-built conditions. During the construction phase and prior to any backfilling or covering, the ENGINEER will survey the work for the purpose of as-built preparation. Surveying shall be performed and certified by a Registered Land Surveyor in good standing with the Arizona State Board of Technical Registration. The ENGINEER shall supply all horizontal and vertical as-built data in ASCII format, including a northing, easting, elevation and description of all work completed under this contract. The CONTRACTOR shall aid the ENGINEER in determining and providing this information. As-built data shall include, but not be limited to all items noted below.

1. Roadway

   a) Horizontal centerline alignment(s) including all PC's, PT's, and PI's.

   b) Cross sections at 50-foot intervals consisting of back of sidewalk, front of sidewalk, top back of curb, flow line, front face of gutter (edge of pavement).

   c) Valley gutters including flow lines, spandrels, approaches, ADA ramps, installed or relocated signs, traffic signals, and street lights.

2. Storm System

   a) All drainage structures including manholes, catch basins, junction structures, scuppers, and inlet/outlet structures. Rim and invert elevations shall be included for all structures. Headwall data shall include top of wall/wingwall, footing elevations, inverts, and apron

boundaries weather concrete or rip-rap.

b) Drainage ditches, swales, and channels; the flow line and sufficient cross sections (minimum of 50-foot intervals) including grade changes, shall be provided to prove conformance to the plans.

3. Water System (Potable and Re-Use)

a) The alignment of the water main(s) including all horizontal and vertical curves. If the water main continues in a straight horizontal ***and*** vertical alignment for more than 100 feet, the water main will be surveyed every 100 feet. Sufficient survey shots shall be taken on horizontal and vertical curves to establish an accurate alignment.

b) All fittings and appurtenances shall be surveyed, including but not limited to the following: valves, bends, tees, reducers blow offs, air release valves, tracer wire stations, water meters, and hydrant locations.

i) Valves shall be shot on the nut and center of the cover. If extensions are used, the length of the extension shall be noted.

ii) All fittings shall be shot at the middle of the fitting.

iii) Air release valves shall be shot at the main connection, the air release box, and any major alignment changes between the two.

c) All mainline water and sewer crossings shall be surveyed for specific elevation separations and be entered on the as-builts.

4. Sewer System (Gravity and Force Mains)

a) The alignment of the main(s) including all horizontal and vertical curves. If the sewer main continues in a straight horizontal ***and*** vertical alignment for more than 100 feet, the sewer main shall be surveyed every 100 feet. Sufficient survey shots shall be taken on horizontal and vertical curves to establish an accurate alignment.

b) All manholes, cleanouts, backwater valves, lift stations, and force main valves shall be shot. Structures shall have rim and invert elevations included.

c) All valves at lift stations and line or isolation valves on force mains shall be shot on the nut and the center of the cover or vault lid.

5. Water tank and appurtenances

a) Required information for water tanks include, but are not limited to finished floor elevation, footing elevations, inlet, outlet, drain, and overflow locations.

b) Site piping and appurtenances shall follow the requirements of 105.16.A.3.

6. Electrical, instrumentation, and control facilities, including, but not limited to, antennae pole.

a) All exterior poles, antennae, transformers, junction boxes, and pull boxes.

b) All exterior power, communication, fiber optic, cable lines, including all conduit and duct

banks.

7. Site improvements

   a) Shall include, but not limited to, retaining walls including footing elevations, curbs, fencing, drainage, chain link fence enclosures, protection posts, gates, finished ground topography, etc.

B. Prior to backfilling or covering any work, the CONTRACTOR shall notify the ENGINEER 48-hours in advance in writing for the item of work. The minimum 48-hours notice time shall not include weekends or holidays. The notification shall be via e-mail to both the CITY and ENGINEER.

C. The CONTRACTOR must provide access for the ENGINEER to verify all as-built information prior to backfilling or covering. The CONTRACTOR shall not backfill or cover an item of work until verification has been completed by the ENGINEER. If an item of work is determined by the ENGINEER to be backfilled or covered prior to being recorded by the ENGINEER, the CONTRACTOR at the direction of the ENGINEER shall uncover the item of work at no additional cost to the OWNER.

D. The CONTRACTOR shall maintain a redlined copy of the project plans including changes made in construction of the project. The redline copy shall be updated on a weekly basis in preparation for the weekly as-built field meeting. The CONTRACTOR shall provide the ENGINEER with a copy of the redline plans upon completion of the project.

E. Weekly field meetings with the CONTRACTOR, ENGINEER and CITY shall occur to review As-Built information for conformance with the specifications. The CONTRACTOR shall provide the ENGINEER with a schedule of work items to be constructed in the upcoming 30 day period, including approximate dates of installation prior to backfilling or covering. The CONTRACTOR field redlines will be reviewed for notation of changes in the work. Missing, erroneous or deficient data must be corrected by the CONTRACTOR at no additional cost to the OWNER.

Measurement and Payment:

No separate measurement and payment shall be made for As-Built Preparation and Coordination. This work shall be considered incidental and included in the unit price bid for construction or installation of the appropriate contract pay items.

106 CONTROL OF MATERIALS

ADD the following:

Contractor shall submit in writing all materials to be used in the project in accordance with ADOT Specification Section 106 and Subsection 730-4.

106.2 SAMPLES AND TESTS OF MATERIALS

REPLACE Section 106.2 in its entirety with the following:

A. Quality control measures sufficient to produce materials and workmanship of acceptable quality are the responsibility of Contractor. Upon request Contractor shall provide factory certificates of compliance or analysis or both to the Engineer. The Contractor shall provide full-time asphaltic concrete laydown compaction testing and adequate plant control for each paving day. The Contractor shall provide an independent geotechnical firm to perform all soils and concrete testing, as required, per these specifications.

B. The weekly reports shall state the type of work performed during the report period and other process

control measures taken to assure quality. Type of work must be identified by activity, location, station, and offset, purpose of test, and any other relevant information that the Engineer needs to identify or replicate the quality control testing. Results of all tests, corrective actions, re-tests, and control charts shall be attached to the weekly reports. Although hand written documentation can be included, the quality control report narrative and test results must be typed to insure that clear reproductions of the documents can be made. The report period shall end at midnight each Friday and the report shall be submitted to the Engineer no later than 5:00 pm of the following Wednesday. Payment in the amount of $500.00 per report will be withheld for each individual report that is not delivered to the Engineer by the time and day specified above. Only one half of the withheld payments will be returned on the next regular project progress payment when the delinquent reports have been turned in and all of the above requirements have been met. Any report turned in more than 10 business days beyond the Wednesday due date will not be eligible for withheld payments to be returned.

Table 1 – Quality Control Minimum Sampling Standard for ABC and Asphalt

Standard MAG Spec Section	Material	Type of Test(s) Required	Sampling Point	Minimum Sampling Frequency
701, 702	Aggregate Base*	Proctor Density	Roadway and Pipe Bedding	At start of production, then as material changes
	(ABC)	Compaction	Roadway and Pipe Bedding	One per 500ft, per lift, per lane pass
		Gradation, PI	Roadway and Pipe Bedding	One per project, or one per 1,000 tons of fraction thereof
321, 322, 323, 710	Hot In-Place Asphaltic Concrete	Oil Content and Gradation**	If no City Inspector is at plant, sample in-place	One per day or one per 500 tons or fraction thereof
321, 322	Hot In-Place Asphaltic Concrete	Mix Design Properties	If not City Inspector is at plant, sample in-place	One per day or one per 500 tons or fraction thereof
		Density/Nuke	Roadway	One per 500ft per lift, per lane pass
		Density/Core	Roadway	5 to 7 cores per mix/project** (additional cores to be taken if source or mix changes) per Engineer

Remarks:

*If Asphalt Millings are used for bedding, they shall meet the requirements of virgin aggregate base course, Asphalt Millings are not accepted as ABC for pavement cross-section.

**Asphalt deficient in oil content, at the direction of the City Inspector/Lab, will be cored 50ft on both sides of failed section. The results of these 2 cores will be averaged with the original test result. Also the cores for gauge calibration.

The City Inspector, on an as needed basis, may require additional tests.

Table 2- Quality Control Minimum Sampling Standard for Concrete				
Standard MAG Spec Section	**Material**	**Type of Test(s) Required**	**Sampling Point**	**Minimum Sampling Frequency**
505, 701, 702, 725	Concrete Flat Work, CIP, Structural	Compressive Strength	At Discharge	One set of three cylinders per 50 C.Y. or one per shift
		Slump, Air, Time and Temperature*	At Discharge	One per set of cylinders
		Thickness	Roadway	See Spec
	Structural Pre-cast** and Re-bar	Certification	Project	One per 100 LF of item. Re-bar size and heat number
701, 702, 725, 728	Lean Mix Concrete (Slurry)	Compressive Strength	At Discharge	One set of three cylinders per shift (per Engineer)

Remarks:

*Concrete spec for time is 90 minutes and temperature is 90 degrees.

**Manhole Shafts and Concrete Pipe need to have acceptance stamp on them and VCP need D-load test results from Certified Lab.

The City Inspector, on an as needed basis, may require additional tests.

Verification Packet should include the following:

All laboratories must submit a Verification Packet at the end of the project stating that the testing for the said project was in accordance to ASTM and/or AASHTO test procedures, including P.E.'s stamp.

Sampling and testing was in accordance to the City of Prescott Acceptance Sampling Guide.

Testing was in accordance to MAG/YAG and the City of Prescott Supplements to MAG for Soils Subgrade and Trench Compaction, Aggregate Base Course and Asphalt sampling and compaction and concrete sampling and cylinder breaks.

Table 3- Quality Control Minimum Sampling Standard for Soil				
Standard MAG Spec Section	**Material**	**Type of Test(s) Required**	**Sampling Point**	**Minimum Sampling Frequency**
206, 601, 603, 205, 301	Soil Backfill or Trench Backfill	Proctor Density	In-Place	One per soil type
		Compaction	In-Place	One per 500ft, per lift
		Proctor Density	Roadway	One per soil type
	Subgrade	Compaction	Roadway	One per 500ft, per lift
		Gradation, PI	Roadway In-Place	One per soil type
	Manholes and Laterals	Compaction	In-Place	One per structure, pipe and lateral trench at various lifts
205, 601	Roadway, Excavation, Embankments	Proctor Density	In-Place	One per soil types
		Compaction	In-Place	One per 1,000 C.Y.
		Gradation, PI	In-Place or Source	One per soil type
211	Fill Construction	Compaction	In-Place	One per 500ft, per lift (MAG 211.3)

Remarks:

*All Compaction failures will be re-tested using a Sandcone. Any resulting failure will be re-worked before any re-tests are performed.

**The Nuclear Gauge shall be calibrated against the Sandcone at least every ten tests or per Engineer. Rock correction shall be used for any + #4 material to obtain Max Proctor Density.

The City Inspector, on an as needed basis, may require additional tests.

ADD the following Section:

106.9 QUALITY ACCEPTANCE TESTING

A. The Engineer may provide quality acceptance sampling and testing. The number of tests and location of each shall be determined by the Engineer. The expense of the initial sampling and testing shall be paid for by the City. Additional sampling and testing required due to failure of the initial test(s) shall be accomplished as provided by the City and these additional expenses shall be deducted from moneys due Contractor.

B. Contractor and the Engineer's representative shall coordinate on a daily basis the following day's work schedule and any testing that may be necessary. The Engineer' quality acceptance testing will generally consist of (1) daily sampling and testing for asphalt extraction/gradation and Marshall density for each paving day; and (2) asphaltic concrete core drilling after placement to verify thickness and density. A minimum of one core per each 1,000 square yards of paving shall be randomly sampled by the Contractor's quality control lab after marking by the City inspector.

C. Construction quality acceptance testing performed by the City of Prescott does not relieve the Contractor or the manufacturer of materials produced for the Contractor, of the obligation to perform and document quality control testing of materials and workmanship.

Measurement and Payment:

No separate payment shall be made for Contractor Quality Control. This work shall be considered incidental and included in the unit price bid for construction or installation of the appropriate contract pay items. An independent geotechnical firm shall perform all quality control testing. The Contractor shall furnish copies of all test results to the City on a weekly basis.

No separate payment shall be made for Quality Acceptance Testing or any related work performed by

Contractor.

107.6 PUBLIC CONVENIENCE AND SAFETY

ADD the following:

A. Maintenance of Traffic

1. Contractor shall at all times conduct his/her work as to ensure the least possible obstruction to traffic.
2. Unless otherwise provided, the road, while being improved shall be kept open to all traffic by Contractor. When so requested by Contractor and approved by the Engineer, Contractor may by-pass traffic over an approved detour route. Regardless of whether it is through or local traffic, Contractor shall keep the portion of the project being used by traffic in such condition that traffic will be adequately accommodated.
3. Contractor shall also provide and maintain in a safe condition temporary approaches or crossings and intersections with trails, roads, streets, businesses, parking lots, driveways residences, garages and farms; however, Contractor will not be required to remove snow.
4. Before any detour is opened to traffic, the Engineer shall have been satisfied that traffic is able to proceed in a safe manner.
5. Contractor shall bear all expense of maintaining traffic over the road being improved as well as constructing, maintaining and subsequently removing Contractor requested detours, approaches, crossings, intersections and other features as may be necessary without any direct compensation.

B. Access to Businesses/Residences

Contractor shall provide to all residents and businesses affected by the project, access to one of their driveways at all times except as modified by the following: If Contractor finds it unavoidable to temporarily close off access for any time, the residents/businesses affected shall be contacted a minimum of 48 hours in advance and an alternate procedure for access mutually agreed to. Contractor shall provide the Engineer with signed evidence of a mutually accepted agreement between the property owner/business manager/residential manager and Contractor prior to said closure.

C. Safety

1. The safety and convenience of the general public and the residents along the project and the protection of persons and property shall be provided for by the Contractor in accordance with the requirements of this contract.
2. Contractor shall submit a Safety Plan to the Engineer at the preconstruction conference. The plan shall detail the procedures The Contractor will implement to satisfy OSHA and the State Occupational Safety Guidelines related to the worker as well as public safety in construction of excavations, structures and confined air spaces as identified by the Engineer. Contractor's Safety Plan shall include the requirement that all workers and visitors must wear hard hats while within the project limits.
3. The Safety Plan submitted by Contractor shall include proposed methods to prevent unauthorized persons from gaining access to the work areas.
4. In conjunction with the Safety Plan, Contractor shall furnish and install 72" temporary chain link fencing, or approved equal satisfactory to the Engineer, around any unattended excavation deeper than four feet with slopes steeper than 2:1. Temporary fencing shall completely enclose the referenced construction activity and shall be secured after normal working hours to prevent unauthorized access.
5. Unless otherwise approved in writing by the Engineer, open utility trenches shall be limited to 50 ft.

in length except for cast-in-place pipe installations and during non-working hours shall be covered with steel plate in a manner satisfactory to the Engineer.

107.9 PROTECTION AND RESTORATION OF PROPERTY AND LANDSCAPE

ADD the following:

Mailboxes and traffic signs removed during construction shall be installed in "like kind" and shall be considered incidental to the unit prices for utility work included in the bid schedule, provided they are not in the bid schedule.

Existing landscape improvements, drainage ditches, etc., shall be restored in "like kind" so that the improvement is put back in as close to its prior state as possible

The Contractor shall restore each individual work site to grades existing before construction work, including wheel ruts and other scarring.

Measurement and Payment:

No separate payment will be made for restoration of items impacted by the Contractor's construction operation and the cost of these items shall be included in the unit bid prices in the bid schedule.

ADD the following Section:

107.15 STORM WATER POLLUTION PREVENTION PLAN (SWPPP)

This project is subject to the Arizona Pollutant Discharge Elimination System (AZPDES) stormwater requirements for construction sites under the Environmental Protection Agency (EPA) delegation to the Arizona Department of Environmental Quality (ADEQ) for the Construction General Permit for Arizona. The following specifications shall apply:

A. **General Requirements:**

The Contractor shall comply with the Arizona Pollutant Discharge Elimination System (AZPDES) Stormwater requirements for construction sites under the Arizona Department of Environmental Quality (ADEQ) Construction General Permit for Arizona. Under provisions of that permit, the Contractor shall be designated as permittee and shall be responsible for providing the necessary labor and materials, and for taking the appropriate measures to assure compliance with the AZPDES Construction General Permit for Arizona as well as other Federal, State and local requirements pertaining to stormwater discharges. As the permittee, the Contractor is responsible for completing, in a manner acceptable to the ADEQ, all documents required by this regulation including the following:

(1) Stormwater Pollution Prevention Plan shall be sealed by a professional engineer licensed in the State of Arizona.

(2) Stormwater Pollution Prevention Plan (SWPPP) for the project including certification form. The Contractor will be required to update and revise the SWPPP as necessary throughout the construction of the project in order to assure compliance with ADEQ permit requirements. The completed SWPPP shall be kept on the project site at all times during construction of the project.

(3) Notice of Intent (NOI) to be covered by AZPDES Construction General Permit for Arizona including certification of signature.

(4) Notice of Termination (NOT) of coverage under AZPDES Construction General Permit for Arizona (upon project completion).

Copies of necessary forms and guidance for preparing the SWPPP are available at ADEQ's website www.adeq.state.az.us/environ/water/permits/azpdes.html

B. **Submittals:**

(1) Preliminary Copies of the NOI and SWPPP shall be submitted to the Engineer at the time of the preconstruction meeting. Any necessary revisions to the SWPPP shall be subject to review by the Engineer, prior to implementation.

(2) The Contractor shall submit completed, signed NOI forms at least 48 hours prior to the initial start of construction on the project to ADEQ. One copy of the completed, signed NOI form shall be submitted to Arizona Department of Environmental Quality at the following address: Stormwater Program - Water Permits Section/NOI, ADEQ (5415B-3), 1110 West Washington, Phoenix, AZ 850071.

(3) Failure by the Contractor (or any of its appropriate subcontractors) to submit the NOI forms within the required time frame shall result in delay of the start of construction. The Contractor shall submit a completed copy of the NOI prior to Notice to Proceed. A copy of the completed NOI shall be posted on the construction site and a copy of the SWPPP shall be kept on the construction site.

C. **Contractor's Responsibilities:**

(1) It is the Contractor's responsibility to perform inspection of all stormwater pollution control devices on the project on a monthly basis and following each rainfall of 0.50 inches or more at the project site and as required under the AZPDES Construction General Permit for Arizona. The Contractor shall prepare reports on these inspections and retain these reports for a period of three years following project completion as required under the AZPDES Construction General Permit for Arizona. Inspection reports shall be submitted monthly to the contracting agency along with payment requests. The Contractor shall maintain all stormwater pollution control devices on the project in proper working order, including cleaning and/or repair during the duration of the project.

(2) No condition of either the AZPDES Construction General Permit for Arizona or the SWPPP shall release the Contractor from any responsibilities or requirements under other environmental statutes and regulations.

D. Upon total project completion, acceptance, and de-mobilization, the Contractor shall submit its completed, signed NOT form to the ADEQ with Copies to the same agencies who received Copies of the NOI, thereby terminating all AZPDES permit coverage for the project.

Measurement and Payment:

Payment shall be at the lump sum unit price bid in the Contract Documents for all material, labor, and other incidental costs relating to the provision, installation, and maintenance of items relating to this permit during project construction. Such incidental costs shall include Contractor costs in order to assure proper operation of the pollution-control devices installed including all maintenance, cleaning, and disposal costs associated with clean-up and repair following storm events or other runoff or releases on the project.

Pay Item: 107.15 Stormwater Pollution Prevention Plan (SWPPP)

108.4 CONSTRUCTION SCHEDULE

ADD the following:

A. At the pre-construction meeting the Contractor shall submit for review by the Engineer a complete construction schedule as stated in the General Conditions of these contract documents.

B. Once this schedule has been accepted by the Engineer, Contractor shall not deviate from it until a

revised schedule has been submitted and accepted by the Engineer.

C. The Engineer reserves the right to reject construction schedule submittals when in his opinion the schedule lacks the proper detail.

109.10 PAYMENT FOR MOBILIZATION/DEMOBILIZATION

REPLACE Section 109.10 in its entirety with the following:

The Agency will compensate Contractor for a single round trip mobilization/demobilization of Contractor's personnel, equipment, supplies and incidentals, including establishment of offices, buildings and other facilities required for the performance of the work on the project, as well as preparatory work and operations prior to the commencement of the work on the project site.

Measurement and Payment:

Mobilization will be measured for payment by the lump sum bid as a single complete unit of work. Payment for mobilization will be made as provided herein which shall be full compensation for supplying and furnishing all materials, facilities, and services and performing all the work involved as specified above. The total amount allowed for mobilization during the life of the contract shall not exceed nine percent (9%) of the original contract amount. If the bid price exceeds this percentage the excess amount will be paid to the Contractor upon completion of the contract and nine percent of the contract amount shall be used to determine partial payments. Partial payments under this item will be made in accordance with the following provisions:

1. The first payment of one third of the lump sum price for mobilization may be made provided that all submissions required under this Section and the General Conditions of the Contract are submitted by the Contractor at the pre-construction conference to the satisfaction of the Engineer and when the Engineer has determined that a significant amount of equipment has been mobilized to the project site which will be used to perform portions of the project work.

2. The second payment of one third of the lump sum price for mobilization shall be made on the first estimate following completion of thirteen percent (13%) of the contract.

3. The third payment of one third of the lump sum price for mobilization will be made on the first estimate following completion of twenty-six percent (26%) of the contract.

Pay Item: 109.10 Mobilization

ADD the following Section:

109.11 CONTRACT ALLOWANCE

A. Contract allowance items are provided for the purpose of encumbering funds to cover the costs of possible contract amendment work. The amount of the allowance item is determined by the Engineer and is not subject to individual bid pricing. All bidders shall incorporate the amount pre-entered in the bid proposal and shall reflect the same in the total amount bid for this project.

B. This allowance item provides an estimated funding to cover unforeseen changes that may be encountered and corresponding extra work needed to complete the contract per plan. Unforeseen extra work, if any, shall be in accordance with the Contract Amendment section of the General Conditions.

It shall be understood that this allowance item is an estimate only and is based on contract amendment history of similar projects. It shall not be utilized without an approved contract amendment. It is further understood that authorized extra work, if any, may be less than the allowance item. The Contractor, by submittal of his bid, acknowledges that the total bid and individual bid items were prepared without anticipation of use of the contract allowance.

Pay Item: 109.11 Contract Allowance

ADD the following Sections:

200.1 DEWATERING

A. All water encountered during the work shall be disposed of by the Contractor in a manner such that it will not damage public or private property or create a public nuisance or health problem. Contractor shall submit drawings and complete design data showing methods and equipment he proposes to utilize in dewatering prior to completing any dewatering work. This work shall consist of obtaining permits, furnishing equipment, materials, and labor necessary for the control and removal of water, the construction or installation of all facilities necessary to accomplish the work, and the subsequent removal of such facilities except when designated on the project plans or in the special provisions to remain in place.

B The Contractor shall keep, where appropriate, the rehabilitated pipe section free from water during rehabilitation. If groundwater is present in any excavation, the static groundwater level shall be drawn down a minimum of one (1) foot below the bottom of excavations to maintain the undisturbed state of natural soils and allow the placement of any fill to the specified density. Disposal of water shall not damage property or create a public nuisance. The Contractor shall have on hand pumping equipment and machinery in good working condition for emergencies and shall have workmen available for its operation. Dewatering systems shall operate continuously until backfill has been completed to one (1) foot above the normal static groundwater level.

Groundwater shall be controlled to prevent softening of the bottom of excavations, or formation of "quick" conditions. Dewatering systems shall not remove natural soils. The Contractor shall control surface runoff to prevent entry or collection of water in excavations.

Release of groundwater to its static level shall be controlled to prevent disturbance of the natural foundation soils or compacted fill and to prevent flotation or movement of structures or pipelines.

Measurement and Payment:

No separate measurement or payment shall be made for dewatering. This work shall be considered incidental and included in the unit price bid for construction or installation of the appropriate contract pay items.

200.2 BY-PASS PUMPING

A. **Description:**

1. Scope: This section specifies the requirements for temporary bypass pumping of sewers
2. Requirements:
   a. Contractor shall provide labor, materials, and supervision to temporarily bypass flow around the Contractor's work.
   b. The Contractor shall have the entire bypassing system in place and tested before bypassing any sewage.
3. At the Pre-construction Conference, the Contractor shall submit drawings and complete design data showing methods and equipment he proposes to utilize in sewer bypassing for approval by the Engineer. The submittal shall include the following information:
   a. Drawings indicating the location of temporary sewer plugs and bypass discharge lines.
   b. Capacities of pumps, prime movers, and standby equipment.

c. Design calculations providing adequacy of the system and selected equipment.

d. Standby power source.

e. Staffing plan.

f. Traffic Control Plan.

4. FLOW DATA: It is the responsibility of the Contractor for design, construction, and operation of an adequate and properly functioning bypass. It is also the responsibility of the Contractor to coordinate with the city to gather flow data.

5. PROTECTION: In areas where flows are bypassed, all bypass flow shall be discharged as approved by the Engineer. No bypassing to the ground surface, receiving waters, storm drains or bypassing which results in groundwater contamination or potential health hazards shall be permitted.

6. SCHEDULING: The bypass system shall not be shut down between shifts, on holidays or weekends, or during work stoppages without written permission from the Engineer. Public advisory services will be required to notify all parties whose service laterals will be out of service and to advise against water usage until the main line is back in service.

B. **Materials:**

1. The Contractor shall provide temporary pumps, conduits and other equipment to bypass the sewer flow. Contractor shall furnish the necessary labor and supervision to set up and operate the pumping and bypass system. Engines shall be equipped with mufflers and/or enclosed to keep the noise level less than 50dB or 10dB above ambient noise levels when measured at the property line closest to the noise source. Pumps and bypass lines shall be of adequate capacity and size to handle the flows.

2. The Contractor shall maintain on site sufficient equipment and materials to ensure continuous and successful operation of the bypass systems. Standby pumps shall be fueled and operational at all times. The Contractor shall maintain on site a sufficient number of valves, tees, elbows, connections, tools, sewer plugs, piping and other parts or system hardware to ensure immediate repair or modification to any part of the system as necessary.

3. All piping, joints and accessories shall be designed to withstand at least twice the maximum system pressure, or 50psi, whichever is greater. All hoses/pipes used for bypass pumping shall be ramped to allow for the ease of vehicular and pedestrian traffic. All hoses/pipes shall be color-coded for identification to prevent cross contamination of water and wastewater lines. Hose/pipes used for wastewater conveyance are not used for water conveyance.

C. **General:**

1. During bypass pumping, sewage shall not be leaked, dumped or spilled outside the sewer system. When bypass pumping operations are complete, all piping shall be drained into the sanitary sewer prior to disassembly. In the event that sewage accidentally drains into the storm drainage system or the street, the Contractor shall immediately stop the overflow, notify the Owner and take the necessary action to clean up and disinfect the spillage to the satisfaction of the Owner. The Contractor shall submit their emergency spillage and cleanup action plan for all sewage spills to the Engineer for approval prior to beginning construction. It shall include but not be limited to a remediation plan that indicates what labor, equipment and resources will be used to restore the site to the condition prior to the spillage.

2. The Contractor shall repair without cost to the Owner any damage that may result from this negligence, inadequate or improper installation, maintenance and operation of bypassing system including mechanical or electrical failures, regulatory infractions and penalties resulting from sewer

spillage.

D. **Flow Control:**

1. Complete stoppage or bypassing of flow is required during sewer line and manhole rehabilitation work.

2. When the depth of flow at the upstream manhole of the sewer line section being worked is above the maximum allowable for television inspection, the flow shall be reduced to the level shown below by plugging or blocking of the flow, or by pumping and bypassing of the flow as specified.

3. PLUGGING OR BLOCKING: A sewer line plug shall be inserted into the line upstream of the section being worked. The plug shall be so designed that all or any portion of the sewage can be released. During TV inspection, flow shall be reduced to within the limits specified above. After the work has been completed, flow shall be restored to normal. Precautions shall be taken to prevent flooding damage. See flow precautions below.

4. PUMPING AND BYPASSING: When pumping and bypassing is required the Contractor shall supply the pumps, conduits and other equipment to divert the flow of sewage around the manhole section in which work is to be performed. The bypass system shall be of sufficient capacity to handle existing flow plus additional flow that may occur during peak flow periods or from precipitation and shall be constructed of such material that will prevent leakage during the pumping operation. The Contractor will be responsible for furnishing the necessary labor and supervision to set up and operate the pumping and bypassing systems. All pump drivers shall have noise suppressor exhaust systems to reduce noise levels to less than 50dB, or 10dB above ambient noise levels, when measured at the closest property line.

5. FLOW CONTROL PRECAUTIONS: When flow in a sewer line is plugged, blocked or bypassed; sufficient precautions must be taken to protect the sewer lines from damage that might result from sewer surcharging. Further, precautions must be taken to insure that sewer flow control operations do not cause flooding or damage to public or private property being served by the sewer involved. All piping(s), joints and accessories shall be designed to withstand at least twice the maximum system pressure or a minimum of 50psi whichever is greater. During by-pass pumping sewage shall not be leaked, dumped or spilled onto any area outside the sewer system. When by-pass pumping operations are complete all piping shall be drained into the sanitary sewer prior to disassembly. In the event sewage accidentally drains into the drainage system or street, the Contractor shall immediately stop the overflow, notify the Engineer and take the necessary action to clean up and disinfect the spillage to the satisfaction of the Engineer. If sewage is spilled onto public or private property, the Contractor shall wash down, clean up and disinfect the spillage to the satisfaction of the City. The Contractor shall report any and all overflows to the City.

E. **Measurement And Payment:**

Payment for By-pass Pumping shall be made at the lump sum bid by the Contractor

Pay Item: 200.2 By-pass Pumping

201 CLEARING AND GRUBBING

201.1 Description:

Replace in its entirety with the following:

This work shall consist of removing objectionable material from the right-of-way, easements, all areas to be graded, and such other areas as may be specified in the special provisions. Clearing and grubbing shall be performed in advance of grading operations.

201.3 Construction Methods:

REPLACE the second paragraph with the following:

All trees and shrubs found suitable for improvement and beautification, which will not interfere with excavation or embankment or cause disintegration of the improvements shall not be disturbed. In any event, the Contractor shall avoid injury to shrubbery, vines, plants, grasses and other vegetation growing outside of the clearing limits. The dragging and the piling of materials of various kinds and the performing of other work which may be injurious to vegetation shall be confined to areas which have no vegetation or which will be covered by embankment or disturbed by excavation during grading operations.

REPLACE the fourth paragraph with the following:

From excavated areas, all stumps, roots and other obstructions 3 inches or over in diameter shall be grubbed to a depth of not less than 24 inches below finish grade.

REPLACE Table 201-1 in its entirety with the following:

TABLE 201-1	
EMBANKMENT CLEARING AND GRUBBING	
Height of Embankment Over Stump	**Height of Clearing and Grubbing**
0 Feet to 2 Feet	All stumps or roots 6 inches or over in diameter shall be grubbed to 24 inches below original grade. All others shall be cut flush with the ground.
2 Feet to 3 Feet	All stumps 1 foot and over in diameter shall be grubbed to 24 inches below original grade. All others shall be cut flush with the ground.
Over 3 Feet	All stumps shall be cut flush with the ground.

REPLACE the eighth paragraph with the following:

All tree trunks, stumps, brush, limbs, roots, vegetation and other debris removed in clearing and grubbing shall be completely removed from the project and properly disposed of.

201.5 ,Measurement and Payment, Clearing and Grubbing:

REPLACE with the following:

No separate payment shall be made for clearing and grubbing.

205 ROADWAY EXCAVATION

ADD the following Section:

205.1.1 General:

The bidding schedule quantities for this item of work will be considered to be the final quantities for payment. Adjustments in the bidding schedule quantities for Roadway Excavation as contained in these specifications may be initiated by Contractor or the Engineer if evidence indicates that the required quantity varies by an amount greater than 5% of the bidding schedule quantity. Contractor shall advise the Engineer, in writing, submitting evidence in the form of a construction survey or photogrammetric survey with measurement for the proposed adjustment and requesting an adjustment in quantities. The Engineer will determine the amount of adjustment, if any. The quantity upon which payment will be based will be the bidding schedule quantity plus or minus only that portion of the adjustment that exceeds 5% of the bidding schedule quantity.

Variations caused by shrink/swell of materials shall not be considered for quantity adjustments.

Adjustments in Roadway Excavation quantities due to revisions ordered by the Engineer will be isolated by measurement or calculations. The bidding schedule quantities will be adjusted by the amount either measured or calculated, regardless of the 5% variation requirement above.

205.2 UNSUITABLE MATERIAL

REPLACE the third paragraph with the following:

If material is encountered during excavation that the Engineer determines to be unsuitable, the following shall apply:

1. Material which is located in a cut section at an elevation above finished sub-grade shall not be utilized in construction but shall be removed and disposed of at a site secured by Contractor.
2. Material which is located below the finished sub-grade elevation in excavation areas shall be removed to the limits as determined by the Engineer and the resultant cavity backfilled with aggregate base course in accordance with Section 310.

205.6 Surplus Material

REPLACE the first paragraph with the following:

Unless otherwise shown on the plans, addressed in the special provisions, or approved by the Engineer, no surplus excavated material shall be disposed of within the right-of-way. The Contractor shall make all arrangements for disposal of the material at off-site locations as may be approved by the Engineer. The Contractor shall provide to the Engineer copies of the written consent of the owner of the property upon which he intends to dispose of such material, and any permits that may be required by a governing agency for said disposal.

205.7 Measurement:

REPLACE the first two paragraphs with the following:

The following earthwork operations will be measured as roadway excavation for the quantities of material involved.

Excavating the roadway prism including public and private roadway approaches; excavating slides and slip-outs not resulting from overshooting; excavating excess material; excavating selected material and topsoil from within the limits of the project and removing such materials from stockpiles when stockpiling is ordered; and excavating ditches.

ADD the following:

Measurement for unsuitable material shall be to the nearest cubic yard as calculated in the field.

205.8 Payment: ADD the following:

Payment for unsuitable material shall be at the contract unit price and shall include all excavation, hauling and disposal at a site secured by Contractor, and backfilling with aggregate base course.

Pay Item: 205.1 Roadway Excavation

Pay Item: 205.2 Removal of Unsuitable Material and Backfill With ABC

206 STRUCTURE EXCAVATION AND BACKFILL

206.4.2 Structure Backfill For Earth Retaining Structures:

REPLACE (A) with the following:

(A) Shall conform to the material and the graduation requirements for Select Material, Type B in Table 702-1 unless otherwise approved by the Engineer.

206.4.4 Structure Backfill For Structures Within Paved Areas:

REPLACE in its entirety with the following:

Where a structure is located within an existing street, proposed street, or paved area:

All backfill material with the exception of controlled low strength material shall be compacted to 95% maximum dry density per ASTM D-698. Controlled low strength material shall be 1 sack material as specified in Sections 604 and 728.

211 FILL CONSTRUCTION

211.1 Description:

Replace in its entirety with the following:

Fill construction shall consist of constructing embankments except as may otherwise be specified, including the preparation of the areas upon which they are to be placed; including the construction of dikes.

The bidding schedule quantities for this item of work will be considered to be the final quantities for payment. Adjustments in the bidding schedule quantities for Fill Construction as contained in these specifications may be initiated by Contractor or the Engineer if evidence indicates that the required quantity varies by an amount greater than 5% of the bidding schedule quantity. Contractor shall advise the Engineer, in writing, submitting evidence in the form of a construction survey or photogrammetric survey with measurement for the proposed adjustment and requesting an adjustment in quantities. The Engineer will determine the amount of adjustment, if any. The quantity upon which payment will be based will be the bidding schedule quantity plus or minus only that portion of the adjustment that exceeds 5% of the bidding schedule quantity.

Variations caused by shrink/swell of materials shall not be considered for quantity adjustments.

Adjustments in Fill Construction quantities due to revisions ordered by the Engineer will be isolated by measurement or calculations. The bidding schedule quantities will be adjusted by the amount either measured or calculated, regardless of the 5% variation requirement above.

Measurement and payment shall be in accordance with Sections 211.5 and 211.6

211.2 Placing:

REPLACE the first paragraph with the following:

Rocks or other solid material which are larger than 4 inches in greatest dimension shall not be placed in fill areas. Broken concrete or asphalt shall not be placed in the fill.

211.3 Compacting:

REPLACE the seventh paragraph in its entirety with the following:

The interstices around the rock in each layer shall be filled with earth or other fine material and compacted. Broken portland cement concrete and bituminous pavement shall not be permitted in the fill.

211.4 Tests:

ADD the following:

Quality control testing frequency shall be one per soil type for proctor density testing and one per 500 feet

per 8-inch lift for compaction testing.

211.5 Measurement:

Replace the first paragraph with the following:

The quantities of fill construction used to construct embankments or dikes will be those of the complete bid item within the limits of dimensions shown on the plans.

211.6 Payment:

ADD the following:

Pay Item: 211.6 Fill Construction

300 STREETS AND RELATED WORK

300.1 Saw Cut

A. The work under this item shall consist of saw cutting the existing pavement where new asphalt concrete is to match existing bituminous surfaces with no provisions for overlaying the entire section. This item shall also include saw cutting of existing Portland cement concrete pavement, sidewalks, driveways and parking lots where new construction shall match the grade of existing surfaces that are to remain where called for on the project plans or where designated by the Engineer.

B. Saw cuts shall be made to a full depth of the material to insure a neat vertical joint. Portland cement concrete designated to remain that is damaged by the saw cutting shall be replaced in kind at The Contractor's expense.

C. No separate measurement or payment will be made for saw cutting, being considered incidental to the cost for work for which saw cutting is required.

301 SUB-GRADE PREPARATION

301.1 Description

ADD the following:

The work under this item shall consist of furnishing all materials, equipment, and labor necessary for preparation of natural or excavated areas prior to the placement of any sub-base material, pavement, curbs and gutters, driveways, sidewalks or other structures. Unless provided for in another bid item, this work shall include the removal and disposal of all unsuitable material including existing pavement and other obstructions in accordance with MAG Specification Section 301. The Contractor shall be required to provide and pay for all quality control geotechnical testing in accordance with the MAG Specifications and the City's MAG Supplement.

301.2.1 REPLACE in its entirety with the following:

The contractor shall not use asphalt concrete or other bituminous roadway surfacing materials as embankment fill.

Project earthwork quantities, when included as separate contract pay items, will include removed asphalt/bituminous material volumes, unless there is a pay item for asphalt removal or asphalt milling in the bid schedule or otherwise specified in the Special Provisions.

All unsuitable material and all excess material shall be disposed of in accordance with the requirements of Sections 205.2 and 205.6, respectively. When additional material is required for fill, it shall conform to

Section 210.

301.3 Relative Compaction:

The subgrade shall be scarified and loosened to a depth of eight (8) inches.

(B) Below detached sidewalk not subject to vehicular traffic 95 percent

Sub-grade quality control testing shall be one per 500 lf per lane for compaction testing.

301.7 Measurement:

REPLACE in its entirety with the following:

Measurement for Subgrade Preparation will be by the square yard, measured by the total accepted area of new pavements, including paved shoulders, tapers, turnouts and driveways that are paved or surfaced with an aggregate base material. The areas under concrete curb and gutter, sidewalk and concrete driveway entrances will not be included. Unless provided for in other separate bid items or unless otherwise specified; Clearing and Grubbing, Roadway Excavation, Rock Excavation, Borrow Excavation, and Fill Construction shall not be measured, in which case payment for these earthwork items, if required, shall be included in the unit price for Subgrade Preparation.

301.8 Payment:

REPLACE in its entirety with the following:

Payment for Subgrade Preparation will be made only when it is performed for street or roadway paving projects. Payment shall be compensation in full for stripping, scarifying, grading, excavating, hauling, filling, compacting, and disposing of excess or unsuitable materials, together with all costs incidental thereto.

Pay Item: 301 Sub Grade Preparation

306 MECHANICALLY STABILIZED SUBGRADE – GEOGRID REINFORCEMENT

306.2 Materials:

ADD the following

Reinforcement Geogrid shall be Tensar BX1200 or approved equal.

306.8 Payment: REPLACE 306.8 in its entirety with the following:

Measurement of geogrid reinforcement shall be the surface area of accepted geogrid to the nearest square yard. No additional measurement or payment shall be made for geogrid overlap as required by the manufacturer.

Payment for geogrid reinforcement shall be per square yard installed complete and in place.

Pay Item: 306 Geogrid, Tensar BX-1200

310 PLACEMENT AND CONSTRUCTION OF AGGREGATE BASE COURSE

310.1 Description

The work under this item shall consist of furnishing all materials, equipment, and labor necessary for the placement of an approved, imported aggregate base course material on top of a prepared subgrade per the required design thickness, grade, cross-section and compaction as specified on the project plan documents and in accordance with MAG Specification Sections 310, 701 and 702. Aggregate base course shall not be placed on a prepared subgrade until the City Engineer or authorized representative has inspected and accepted the underlying subgrade. The Contractor shall be required to provide and pay for all quality control

geotechnical testing in accordance with the MAG Specifications and the City's MAG Supplement. Use of Reclaimed Concrete Material (RCM) is not allowed.

ADDITION of the following to MAG Section 310.1:

310.1.1 Reclaimed Asphalt Pavement (RAP)

Use of Reclaimed Asphalt Pavement (RAP) aggregates or "millings" produced on-site for the intended use in the underlying base or subgrade material ***must be approved by the City Engineer or authorized representative***. Imported or stockpiled RAP milling material allowed to be used in lieu of or blended with virgin aggregate base course material shall be screened and meet MAG Specification Sections 310, 701 and 702. RAP millings must be uniformly mixed with an imported virgin aggregate base course material.

310.2 Placement and Construction:

ADD the following: Aggregate base course shall not be placed on excessively wet or frozen sub-grade materials as determined by the Engineer.

310.2.1 Aggregate base course quality control testing frequency shall be as follows:

Resistance to Degradation and Abrasion One at the start of production and again if source changes Fractured Faces, One Face, PI, and Gradation One per shift

310.3 Compaction:

The fifth paragraph shall be REPLACED as follows: For roadway construction, a minimum of one field density test shall be performed per 6-inch lift per 500 feet per lane. For other aggregate base course applications, a minimum of one field density test shall be performed for each 800 square yards.

Delete (A), (B), and (C) in their entirety, and ADD the following: Aggregate base course shall be compacted to 98% in all instances.

310.5 Measurement and Payment:

REPLACE in its entirety with the following:

> Measurement for aggregate base course material will be per ton furnished and placed. Copies of material delivery tickets will be required for quantity verification purposes. Payment shall be made at the unit price bid and shall be considered full compensation for this work item.
>
> **Pay Item: 310 Aggregate Base Course**

317 ASPHALT MILLING

MAG Section 317 shall be replaced in its entirety as follows:

317.1 Description:
The work under this section shall consist of milling existing asphalt concrete pavement where shown on the plans or requested by the Engineer.

317.2 Construction Requirements:

When milling is specified, the existing asphaltic concrete shall be removed in accordance with the details shown on the project plans with equipment specifically designed to remove such material by means of grinding or chipping to a controlled line and grade. The equipment used shall be capable of removing the existing asphaltic concrete within 0.01 feet of the specified removal depth. The removal shall be accomplished in a manner which does not destroy the integrity of any asphaltic concrete pavement that remains and which does not result in a contamination of the milled asphaltic concrete with the underlying

base material.

Pavement to be removed by milling, adjacent to manholes, valve boxes, small radius curbs and other fixed objects that produce confined areas shall be removed with milling equipment specifically designed to operate in restricted areas and capable of removing asphaltic concrete of the specified thickness without damage or displacement of the adjacent object. The removal of asphalt concrete pavement at the approaches to structures shall be accomplished in a manner approved by the City.

On projects with existing curb and gutter, any asphaltic concrete buildup in the gutter designated to be removed, shall be removed prior to the pavement removal operation by equipment and methods approved by the Engineer. The equipment and methods used shall be capable of removing the asphaltic concrete buildup without causing damage to the curb and gutter

Upon removal, the excess existing asphalt concrete material shall be delivered and off-loaded and stock-piled by the Contractor to the City Waste Transfer Station on Sundog Ranch Road at a location on site determined by the City. The millings will then become the property of the City.

Prior to milling and roadway excavation, all existing manholes, valve boxes, etc. shall be lowered and protected. All City facilities shall be protected from debris that may result from any adjustments and the Contractor shall be responsible for any maintenance activity resulting from debris related to the construction. No separate payment shall be made for lowering and protecting existing manholes, valve boxes, etc.

Under no circumstance shall the removal of existing asphaltic concrete begin until the mix design for replacement asphaltic concrete has been approved by the Engineer.

The extent of removal of existing asphaltic concrete must be in keeping with the contractor's ability to produce, haul, place and compact replacement asphaltic concrete so that at all times the length of open " trench" is at a minimum. If the contractor's product ion of replacement asphaltic concrete is stopped for any reason, the removal of asphaltic concrete shall either cease or shall be reduced. The Engineer will be the sole judge as to whether the removal shall cease or be reduced. The Engineer’s decision will be based on the reason for the stoppage in asphaltic concrete product ion, the expected length of the stoppage, the type and depth of the material being removed, and the time of day.

317.2.1 Quality Control:

All milling shall be inspected and approved prior to paving. High spots in excess of the tolerances noted shall be milled until in conformance.

Low spots in excess of ½” (one-half inch) shall have a leveling course placed prior to paving at no additional cost to the CITY.

317.2.2 Paving:

For mill and overlay areas, replacement asphaltic concrete shall be placed as soon as possible after milling has occurred and been approved. The surface on which the material is to be placed shall be uniform and free of loose material. Any exposed base material shall be compacted to the extent required by the Engineer.

The "trench" in which asphaltic concrete is being placed shall be filled before the end of each day's work and the lane shall be opened to traffic. The length of open "trench" at any one time shall not exceed two miles or half the length of the work, whichever is the lesser.

In the event of circumstances beyond the control of the contractor, such as equipment breakdown, or if the production of the replacement asphaltic concrete has been stopped by the Engineer and the contractor is unable to comply with the requirements in the preceding paragraph, the contractor shall provide and maintain such traffic control devices that the Engineer deems necessary under the circumstances in order to provide safe and efficient passage through the work zone.

If the Engineer deems it to be warranted, the contractor shall provide for the surface drainage of areas where the pavement surface has temporarily been removed.

317.3 Mean Macrotexture Depth:

Macrotexture asphalt milling when included as a separate contract pay item shall be performed in accordance with the following:

Existing asphaltic concrete shall be removed by milling in accordance with the details shown on the project plans and as specified herein. The milling equipment shall be specifically designed to remove material to a controlled line and grade by means of grinding or chipping. The equipment used shall be capable of removing the existing asphaltic concrete uniformly throughout the milled area at the required cross-slope and within 1/8 inch of the specified removal depth. The specified removal depth of the existing bituminous pavement shall be as noted on the plans. The removal shall be accomplished in a manner which does not destroy the integrity of any pavement that remains. During production milling, the contractor shall verify the actual depth of milling required to remove the desired underlying pavement surface. If it is determined by the Engineer that the required milling depth is greater than the specified milling depth, the additional material shall be completely removed to the desired underlying pavement surface, as approved, in accordance with MAG 109.4. The milled material shall be removed and disposed of as specified by the CITY.

The milled surface shall have a maximum mean macrotexture depth of 4.50 millimeters, as determined in accordance with Arizona Test Method 742- Mean Macrotexture Depth of Milled Pavement.

At the start of the milling operation, the contractor shall mill a 500-foot test section. The milled surface of the test section shall be evaluated by the Engineer for compliance with the maximum mean macrotexture depth requirement. If the milled surface is in compliance with the macrotexture requirement, the contractor may begin production milling. If the milled surface is not in compliance with the macrotexture requirement, the contractor shall make adjustments to the milling operation and then mill another test section.

During production milling, the mean macrotexture depth shall be determined at a minimum frequency of one test per one-half mile per lane. If, at any time, during the milling operation the Engineer determines that the macrotexture requirement is not being achieved, the contractor shall stop milling. Milling shall not resume until the Engineer is satisfied that the macrotexture requirement can be met or until successful completion of another test section. The forward speed of the milling machine during production milling shall not exceed the speed used for the test section. The forward speed of the milling machine shall be checked throughout each production day, or at the discretion of the Engineer.

The profile of the milled surface, in both the longitudinal and transverse directions, shall not vary by more than 1/8 inch over a distance of ten feet.

Under no circumstance shall the removal of existing asphaltic concrete begin until the mix design for replacement asphaltic concrete has been approved by the Engineer.

The extent of removal of existing asphaltic concrete must be in keeping with the contractor's ability to produce, haul, place and compact replacement asphaltic concrete so that at all times the length of milled surface is at a minimum. If the contractor's production of replacement asphaltic concrete is stopped for any reason, the removal of asphaltic concrete shall either cease of shall be reduced. The Engineer will be the sole judge as to whether the removal shall cease or be reduced. The Engineer's decision will be based on the reason for the stoppage in asphaltic concrete production, the expected length of the stoppage, the type and depth of the material being removed, and the time of day.

Asphaltic concrete shall be placed as soon as possible after the milling. The surface on which the material is to be placed shall be uniform and free of loose material.

The length of milled surface at any one time shall not exceed two miles, or one-half the length of the work, whichever is less. Asphaltic concrete shall be placed on the milled surface before the end of each day's

work. The lane shall be opened to traffic at the end of each day's work.

In the event of circumstances beyond the control of the contractor, such as equipment breakdown, or if the product ion of the replacement asphaltic concrete has been stopped by the Engineer and the contractor is unable to comply with the requirements in the preceding paragraph, the contractor shall provide and maintain such traffic control devices that the Engineer deems necessary under the circumstances in order to provide safe and efficient passage through the work zone.

If the Engineer deems it to be warranted, the Engineer will require that the contractor provide for the surface drainage of areas where the pavement surface has temporarily been removed.

Pavement, to be removed by milling, adjacent to manholes, valve boxes, small radius curbs and other fixed objects that produce confined areas shall be removed with milling equipment specifically designed to operate in restricted areas and capable of removing asphaltic concrete of the specified thickness without damage or displacement of the adjacent object. Such areas may be excluded from macrotexture testing at the discretion of the Engineer.

On projects with existing curb and gutter, any asphaltic concrete buildup in the gutter designated to be removed, shall be removed prior to the pavement removal operation by equipment and methods approved by the Engineer. The equipment and methods used shall be capable of removing the asphaltic concrete buildup without causing damage to the curb and gutter.

317.4 Measurement and Payment:

Payment for milling shall be based on plan quantities at the unit bid price in the bid schedule to include milling, delivery, and stock-piling millings at the City Waste Transfer Station on Sundog Ranch Road.

Pay Item: 317.2 Asphalt Milling

Pay Item: 317.3 Macrotexture Milling

321 ASPHALT CONCRETE PAVEMENT

Asphalt mix design materials, manufacture, and placement shall be in accordance with Section 321 and Section 710 with the additions, clarifications and changes herein:

Section 321.3 Weather And Moisture Conditions: shall be changed as follows:

Asphalt concrete shall be placed only when the surface on which the material is to be placed is dry, unfrozen, the atmospheric temperature in the shade is at 40 degrees F and rising, and the temperature of the road surface or subsurface is at 50 degrees F and rising as measured in the shade. No asphalt concrete shall be placed when the weather is foggy or rainy, when precipitation is eminent, or when the base or sub base on which the material is to be placed is unstable. Asphalt concrete shall be placed only when the Engineer or his authorized representative determines that weather conditions are suitable and sub base conditions on which the material is to be placed are acceptable.

Section 321.4 Application Of Tack Coat: the first and second paragraphs are modified as follows:

A tack coat shall be applied to all existing and to each new course of asphalt concrete prior to the placing of a succeeding lift of asphalt concrete.

The application of the tack coat shall comply with Section 329. The grade of emulsified asphalt shall be SS-1 h as specified in Section 713.

Section 321.6 Mix Production: is supplemented as follows:

1. STOCKPILING

a. Sufficient virgin mineral aggregate material shall be stockpiled at the site of the hot plant to produce the quantity of asphalt concrete required for a minimum of two successive eight hour shifts; however, this requirement will be modified during the last two days production, or under special conditions with the Engineer's approval.

b. Mineral aggregate shall be stockpiled so that segregation is minimized. An approved divider of sufficient size to prevent intermingling of stockpiles shall be provided.

2. PROPORTIONING

a. No fine material which has been collected in the dust collection system shall be returned to the mixture unless the Engineer, on the basis of tests, determines that all or a portion of the collected fines can be utilized. If the Engineer so determines, he will authorize in writing the utilization of a specific proportion of the fines; however, authorization will not be granted unless the collected fines are accurately and uniformly metered into the mixture.

b. Mineral aggregate and bituminous material shall be proportioned by volume, by weight, or by a combination of volume and weight.

c. When mineral aggregate and bituminous material are proportioned by weight, all boxes, hopper buckets or similar receptacles used for weighing materials, together with scales of any kind used in batching materials, shall be insulated against the vibration or movement of the rest of the plant due to the operation of any equipment so that the error in weighting with the entire plant operating shall not exceed 2% for any setting nor 1½% for any batch. Bituminous material shall be weighed in a heated, insulated bucket suspended from a springless dial scale system.

d. When mineral aggregate and bituminous material are proportioned by volume, the correct portion of each mineral aggregate size introduced into the mixture shall be drawn from the storage bins by an approved type of continuous feeder which will supply bituminous material and so arranged that the proportion of each mineral aggregate size can be separately adjusted. The continuous feeder for the mineral aggregate shall be mechanically or electrically actuated.

3. DRYING AND HEATING

a. A recording pyrometer or other approved recording thermometric instrument sensitive to a rate of temperature change of not less than 10° F per minute shall be so placed at the discharge chute of the drier in order to record mineral aggregate and to facilitate reading the recorded temperature. A copy of the recording shall be given to the Engineer. The moisture content of the asphalt concrete immediately behind the paver shall not exceed 1%.

4. MIXING

a. The production of the plant shall be governed by the rate required to obtain a thorough and uniform mixture of the materials. Mixing shall continue until the uniformity of coating, when tested in accordance with the requirements of AASHTO T-195, is at least 95%.

b. A positive signal system shall be provided to indicate the low level of mineral aggregate in the bins. The plant will not be permitted to operate unless this signal is in good working condition. Each bin shall have an overflow chute or a divider to prevent material from spilling into adjacent bins.

c. The temperature of asphalt concrete upon discharge from the mixer shall not exceed 325° F. If the asphalt concrete is discharged from the mixer into a hopper, the hopper shall be constructed so that segregation of asphalt concrete will be minimized.

Section 321.8 Placement: is supplemented as follows:

a. Contractor shall stringline finish ABC grade in the presence of the Engineer or his representative to

verify compliance to specified tolerances prior to the placement of asphalt concrete. Placement of asphalt concrete shall not begin until adjacent Portland cement concrete items have obtained 75% of design strength.

b. The handling of asphalt concrete shall at all times be such as to minimize segregation. Any asphalt concrete which displays segregation shall be removed and replaced.

c. All wheels and tires of compactors and other equipment shall be wiped when necessary with an approved product in order to prevent the picking up of the asphalt concrete.

d. Before asphalt concrete is placed, the surface to be paved shall be cleaned of objectionable material.

e. The base or sub-grade upon which the asphalt concrete is to be placed shall be prepared in accordance with the applicable requirements for the material involved and maintained in a smooth and firm condition until placement.

f. At any time, the Engineer or his designee may require that the work cease or that the work day be reduced in the event of weather conditions either existing or expected which would have an adverse effect upon the asphalt concrete.

g. The temperature of asphalt concrete just prior to compaction shall be at least 250° F but shall not exceed 300° F, unless permitted by the Engineer.

h. The asphalt concrete shall be placed as a surfacing course. Surfacing courses are defined as courses placed to serve either as a traffic surface or as a surface upon which a finishing course or seal coat is to be placed. The thickness of surfacing courses will be shown on the project plans.

i. In order to achieve, as far as practicable, a continuous operation, the speed of the paving machine shall be coordinated with the production of the plant.

j. Tapered sections exceeding eight feet in width or widened sections not exceeding four feet in width may be placed and finished by other means approved by the Engineer.

Section 321.8.4 Compaction Base and Surface: is supplemented as follows:

a. Compacting and smoothing shall be accomplished by the use of self-propelled equipment. Compactors shall be pneumatic tired and tandem powered (steel wheel) and shall be approved by the Engineer.

b. Compactors shall be operated in accordance with the manufacturer's recommendations. Compactors shall be designed and properly maintained so that they are capable of accomplishing the required compaction.

c. Steel wheel compactors shall weigh not less than eight tons and have the vibratory mode option.

d. Pneumatic tired compactors shall be the oscillating type having a width of not less than four feet with pneumatic tires of equal size, diameter and having treads satisfactory to the Engineer. Wobble-wheel compactors will not be permitted. The tires shall be spaced so that the gaps between adjacent tires will be covered by the following tires. The tires shall be inflated to 90 lb. per square inch, or such lower pressure will not vary more than five lb. per square inch from the designated pressure.

e. Pneumatic tired compactors shall be constructed so that the total weight of the compactor can be varied to produce an operating weight per tire of not less than 2,000 lb.

f. Steel wheel compactors shall not be used in the vibratory mode when the surface temperature of the asphalt concrete falls below 180 ° F.

g. Asphalt concrete shall be compacted to not less than 95.0% of laboratory density.

h. Compaction control shall be defined as the responsibility of Contractor on the basis of his anticipated rate of production to determine the number and types of compactors and the sequence and manner in which they shall be used in order to achieve the specified percent density.

i. The responsibility for developing and controlling the compaction lies with Contractor.

j. The City reserves the right to test Contractor's percent of density at any time.

k. Core samples shall be taken by Contractor on a random location basis with locations determined by the Engineer and consist of one core per every 1,000 square yards of roadway, for each day's production. The asphalt cores shall be taken on the following workday or within 24 hours whichever applies and shall be submitted to the City's Quality Assurance firm for testing.

l. For complete acceptance, all core densities must show a minimum relative density of 95.0% based on a 75 blow Marshall Density, AASHTO T-245. The Marshall Density shall consist of two sets of three specimens averaged for each day's production.

m. If the core densities show inadequate compaction the unit price will be adjusted per the table below:

Percent Compaction	Reduction in Payment
94.0 - 94.9	5%
93.0 - 93.9	10%
92.0 - 92.9	25%

n. When the percent compaction is less than 92.0%, Contractor may be required to remove and replace any portions at the discretion of the Engineer at no extra cost to the City.

Section 321.8.5 Smoothness: the second sentence is changed as follows:

a. Surfacing course surfaces shall not vary more than 1/8 inch from the lower edge of ten-ft. straightedge when the straightedge is placed parallel to the center of the roadway.

Section 321.9 Quality Control: shall be changed as follows:

A. Contractor Quality Control

1. GENERAL REQUIREMENTS

a. It shall be the responsibility of Contractor to administer a Quality Control Plan, hereinafter referred to as "Plan", sufficient to assure a product meeting the requirements of these specifications. The Plan may be operated wholly or in part by a subcontractor or an independent organization; however, the Plan's administration, including compliance with the Plan and its modification, shall remain the responsibility of Contractor.

b. Contractor is required to provide and maintain a Quality Control Plan, along with all the personnel, equipment, supplies and facilities necessary to obtain samples, perform tests, and otherwise assure the quality of the project.

c. Contractor shall submit the Quality Control Plan to the Engineer or his designee at the preconstruction conference.

e. Contractor shall perform process control sampling, testing and inspection during all phases of the work and shall perform the process control sampling, testing, and inspection at a rate sufficient to assure that the work conforms to the contract requirements. Contractor shall provide the Engineer a

certification stating that all of the testing equipment to be used is properly calibrated and will meet the specifications applicable for the specified test procedures.

2. *ELEMENTS OF THE PLAN*

a. The Plan shall address all elements which affect the quality of the asphalt concrete including, but not limited to the following: Mix Design, Aggregate Production, Quality of Components, Stockpile Management, Proportioning, Mixing (including addition of Mineral Admixture, if required), Placing and Finishing, Joints, Compaction.

3. *PLAN IMPLEMENTATION*

a. The Contractor shall provide testing at the frequencies listed in Table 321.9.1 during production of the asphalt concrete. A laboratory accredited in each of the listed tests by the AASHTO Materials Laboratory (AMRL) shall perform the testing.

TABLE 321.9.1		
CONTRACTOR QUALITY CONTROL TESTING REQUIREMENTS		
Test	Sample Point	Frequency
Ignition Binder Calibration, ASTM D 6307	Stockpiles or storage tanks	1 per mix design per project
Ignition Binder Test, ASTM D 6307, C 117 & C116	Plant, truck, or on-grade	1 per 1000 tons, but not less than 1 per day
Gyratory or Marshall Density, ASTM D 4013 or AASHTO T 166	Plant, truck, or on-grade	1 per 1000 tons, but not less than 1 per day
Maximum Theoretical Density, ASTM D 2041	Plant, truck, or on-grade	1 per 1000 tons, but not less than 1 per day
Temperature	On-grade	Continuous Reading
Aggregate Gradation, ASTM C 117 & C 136	Cold Feed	1 per 1000 tons, but not less than 1 per day

b. Results of each test shall be provided to the Engineer or his designee immediately upon completion and in no case later than the end of the day asphalt was produced. Test results shall be used to control the asphalt concrete production. Production of the asphalt concrete on consecutive paving days shall not commence until the prior day's test results have been submitted to the Engineer or his designee and appropriate actions have been taken in accordance with the criteria listed in Table 321.9.1 and Table 321.9.2.

TABLE 321.9.2		
CRITERIA FOR REQUIRED PLANT ADJUSTMENT		
Property	Criteria A (Adjustment)	Criteria S (Stoppage)
Binder Content	±0.4%of Mix Design	±0.5%of Mix Design
Air Voids	4±1.5%	4±2.0%
Gradation	Table 321-3	Table 321-3
Temperature	±10BC of Mix Design	±15BC of Mix Design

c. The guidelines in Table 321.9.2 and Table 321.9.3 shall be used to determine if the plant will require adjustment or stoppage. If the Contractor's test results indicate the mixture does not comply with Criteria A in Table 321.9.2, an adjustment to the plant will be required to bring the production closer to the middle of the specification bands. The Contractor is responsible for determining the extent and the method of adjustment, and shall notify the Engineer or his designee in writing of what adjustments were made.

TABLE 321.9.3	
ALLOWABLE GRADATION VARIATION FROM MIX DESIGN TARGET	
Maximum Aggregate Size	100%
Nominal Maximum Aggregate Size (NMAS)	±5%
#8 (2.36 mm) Sieve to NMAS	±4%
#40 (0.425mm)Sieve	±3%
#200 (0.75 mm) Sieve	±1.5%

d. If the Contractor's test results indicate the mixture is at or beyond the range established by Criteria S in Table 321.9.2, production shall cease immediately, and shall not resume (except as required to produce material for additional samples) until additional test results verify the adjustments will produce test results meeting Criteria A in Table 321.9.2. The Engineer or his designee may enforce the adjustment or stoppage criteria if the acceptance tests and the quality control tests are not in agreement.

e. A representative of the City shall secure two representative samples of the mixture for each day's production.

f. Samples will be tested for conformance with the mineral aggregate gradation in accordance with the requirements of AASHTO T27. The gradation of the mineral aggregate will be considered to be acceptable unless the average of any three consecutive tests or the results of a single test varies from the mix design gradation percentages as follows:

	Number of Tests	
Passing Sieve	Three Consecutive	One
Nominal Maximum Aggregate Size	± 6%	± 8%
No. 8	± 4%	± 6%
No. 40	± 4%	± 6%
No. 200	± 1.5%	± 2.0%

g. Samples will be tested for conformance with the sand equivalent in accordance with AASHTO T176 and will be considered acceptable if the result is 45 or greater and does not vary from the design by more than -10 points. At any time that test results indicate that the gradation of the mineral aggregate or sand equivalent does not fall within all of the limits indicated, the production of asphalt concrete shall cease immediately and shall not begin again until calibration tests indicate that the gradation and sand equivalent is within the limits indicated.

Section 321.12 Measurement: shall be supplemented as follows:

a. Measurement under this item shall be to the nearest square yard.

b. No separate measurement shall be given for the thickened edge, COP Standard Detail 201P and as detailed on project drawings. This work shall be considered incidental and included in the unit price bid in the contract documents. Payment shall be made at the unit price bid in the contract documents for the items complete in place, adjusted for compaction and thickness deficiencies as herein provided.

Section 321.13 Payment: ADD the following:

Pay Item: 321 Asphalt Concrete (AC) Pavements

Pay Item: 321.8.3 Asphalt Leveling Course

Pay Item: 321.8.6 Asphalt Concrete Overlay

Pay Item: 321.8.7 Pavement Fabric Interlayer

329 TACK COAT

329.3 Application: REPLACE with the following:

a. The application rate shall be between 0.04 to 0.06 gallons per square yard of diluted material, 50% water and 50% emulsion, using SS-1H.

b. The tack coat shall be applied only as far in advance of placing the asphalt concrete as ordered by the Engineer; however, in no event shall the tack coat be applied and not covered by the asphalt concrete in the same day.

329.6 Measurement: REPLACE with the following:

Measurement shall be per ton diluted as placed, based on weight tickets.

329.7 Payment: ADD the following:

Pay Item: 329 AC Bituminous Tack Coat, Type SS-1h

336 PAVEMENT MATCHING AND SURFACING REPLACEMENT

336.1 Description: REPLACE the second paragraph with the following:

Asphalt concrete roadway pavement replacement shall be constructed in accordance with COP Standard Detail 2-01P and as indicated on the plans.

REPLACE the fourth paragraph with the following:

All other surface replacement in the right-of-way but not in paved roadways shall be constructed in accordance with COP Standard Detail 2-02P and as indicated on the plans.

336.2.1 Pavement Widening or Extensions: REPLACE the second paragraph with the following:

The existing pavement shall be cut and trimmed after placement of required ABC and just prior to placement of asphalt concrete for pavement widening or extension, and the trimmed edges shall be painted with a light coating of emulsified asphalt immediately prior to constructing the new abutting asphalt concrete pavements. No extra payment shall be provided for these items and all costs incurred in performing this work shall be incidental to the widening or pavement extension.

336.2.3 Temporary Pavement Replacement: REPLACE the first and second paragraphs with the following:

Temporary pavement replacement with UPM in accordance with COP Standard Detail 2-01P shall be required in right-of-way until permanent hot mix trench pavement replacement can be performed. The Contractor shall install temporary asphalt pavement or the first course of permanent pavement replacement in accordance with MAG Section 336 immediately following backfilling and compaction of trenches that have been cut through existing pavement. Except as otherwise provided in MAG Section 336, this preliminary pavement shall be maintained in a safe and reasonably smooth condition until required backfill compaction is obtained and final pavement replacement is completed. Temporary paving removed shall be hauled from the job site and disposed of by the Contractor at no additional cost to the Contracting Agency.

Permanent pavement replacement shall replace temporary repairs within 5 working days after completion of temporary work.

336.2.4.1 Permanent Pavement Replacement: ADD the following:

(G) AC trench pavement replacement shall be a minimum four inch (4") thickness compacted to 95% of laboratory density in accordance with COP Standard Detail 2-01P, MAG Sections 601.6.

(H) Permanent hot mix AC pavement replacement shall be required for all trench cuts. Installation of UPM or other high performance cold mix shall not be permitted for permanent installation. The Contractor shall be required to maintain pavement trench cuts to the satisfaction of the Engineer.

(I) The Contractor shall coordinate with Engineer a minimum of two (2) working days in advance of trench paving.

REPLACE 1/4-inch with 1/8-inch in the ninth paragraph.

DELETE the last paragraph of this section in its entirety.

336.3 Types and Locations of Pavement and Surfacing Replacement: REPLACE paragraphs one through five (inclusive) with the following:

Normally, the type of pavement replacement and backfill required will be noted on the plans or specified in other portions of the contract documents and construction shall be in accordance with COP Standard Detail

2-01P and 2-02P. If a type is not noted on the plans or specified in the special provisions, the following criteria will govern:

T-Top trench repair will be utilized on all streets.

MAG Standard Detail 200-1, Type C trench repair shall be used to repair existing Portland cement concrete pavement.

COP Standard Detail 2-02P trench repair shall be utilized to repair surfaces other than asphalt concrete or Portland cement concrete pavement. It may also be used when the condition of the existing pavement does not justify construction of T-Top trench repair. Prior written approval of the Engineer is required for this condition.

336.4 Measurement: REPLACE the first and second paragraphs with the following:

(A) In computing pay quantities for replacement using COP Standard Detail 2-01P, pay widths shall not exceed the maximum widths as depicted on Table 601-1, plus 24-inches for the T-Top.

(B) In computing pay quantities for replacement using COP Standard Detail 2-02P, pay widths shall not exceed the maximum widths as depicted on Table 601-1.

336.5 Payment: ADD the following:

Pavement Matching and Surfacing Replacement shall include all saw cutting, removal and disposal of existing pavement, plus all labor and material for complete installation of permanent pavement replacement. No extra payment will be made for temporary pavement required for maintenance of utility trench cuts or for trench widths in excess of Section 336.4.

Pay Item: 336 Pavement Matching and Surfacing Replacement

340 CONCRETE CURB, GUTTER, SIDEWALK, SIDEWALK RAMPS, DRIVEWAY, & ALLEY ENTRANCE

340.2 Materials: REPLACE the first sentence with the following:

Concrete shall be Class AA unless otherwise noted.

ADD the following:

340.2.2 Detectable warnings shall be Masco Detectable Warning Panels, or approved equal, color Salem Red.

340.3 Construction Methods: REPLACE the second paragraph with the following:

The subgrade shall be constructed and compacted true to grades and lines shown on the plans and as specified in Section 301. All soft or unsuitable material shall be removed to a depth of not less than 6 inches below subgrade elevation and replaced as directed by the Engineer. Unsuitable material shall be measured and paid in accordance with Section 205.2. The subgrade shall be compacted to not less than 95% of the maximum dry density.

All concrete items in this section shall be constructed on a minimum of 4-inches of aggregate base course unless noted otherwise, whether shown on the standard details or not. Aggregate base course shall be compacted to not less than 98% of maximum dry density.

DELETE Section 304.4 Backfilling, Section 304.5 Measurement, and Section 304.6 Payment in their entirety.

ADD the following Sections:

340.4 Concrete Items;

340.4.1 Concrete Curb, Gutter, and Curb Terminations

The pavement section (base and sub-base) shall extend to the back of curb.

340.4.2 Concrete Sidewalk, Sidewalk Landing, and Ramp

Concrete sidewalk, sidewalk landings, and ramps shall be in accordance with City of Prescott Standard Details or as otherwise modified on the plans.

340.4.3 Concrete Driveway Entrances and 6" Concrete Slabs

Portland cement concrete pavement shall contain 6% ±1% entrained air. Slump shall be a maximum of 3½".

Construction Joints shall be a maximum of 15 feet apart. Contractor shall submit a jointing pattern for review and approval prior to construction.

Driveways shall include the curb returns to the existing grades as shown on MAG Standard Detail 251 and modified by the driveway details in the plans. All concrete used in the driveways and adjacent sidewalk crossings shall be six–inches (6") thick.

Match up construction shall include ten feet (10') of replacement driveway surfacing from the new top of sidewalk to the existing driveway elevations behind the sidewalk unless otherwise shown on the plans.

340.4.4 Concrete Valley Gutter

All concrete valley gutter shall be constructed on a minimum eight-inch (8") thick aggregate base course, whether shown on the standard details or not.

340.5 Backfilling:

Unless otherwise specified the Contractor shall backfill behind the curbs, sidewalk or sidewalk ramps with soil native to the area to the lines and grades shown on the plans.

340.6 Measurement:

Concrete curbs and gutters of the various types shown on the plans and in the proposal will be measured along gutter flow line through inlets, catch basins, driveways, sidewalk ramps, etc., by the lineal foot to the nearest foot for each type, complete in place. Measurement for curb terminations and transitions shall be included with the linear measurement of the various types of curb or curb and gutter as shown on the plans and in the proposal.

Concrete sidewalks, driveways, alley intersections, valley gutters and aprons will be measured to the nearest square foot complete in place. When concrete sidewalk, sidewalk ramps, driveways, alley intersections, valley gutters, and/or aprons are cut during trenching operations, the square foot measurement for payment will be in accordance with Section 336.

Concrete sidewalks, driveways, alley intersections, valley gutters and aprons will be measured to the nearest square foot complete in place.

Detectable warnings shall not be measured for payment. Detectable warnings are considered integral to the walking surface that they form a part of and the cost is included in the related pay item.

Curb ramp installations shall be measured as complete installed units and shall include the ramp curb and the walking surfaces between the ramp curb and back of curb and gutter or single curb. Single curb or curb and gutter located at the edge of roadway shall be measured and paid for separately. The surface area of curb ramps shall not be included in the measured quantity for sidewalk.

Aggregate base course shall be considered incidental to all items in the section.

No separate measurement or payment for the curb returns and transition curbs for driveways shall be made, the cost being considered incidental to Pay Item 340.3, Concrete Driveway Entrance and 6" Concrete Slab

340.7 Payment:

Pay Item: 340.4.1 Concrete Curb and Gutter

Pay Item: 340.4.1.1 Single Curb

Pay Item: 340.4.2 Concrete Sidewalk

Pay Item 340.4.2.1 ADA Ramp

Pay Item: 340.4.3 Concrete Driveway Entrances and 6" Concrete Slabs

Pay Item: 340.4.4 Concrete Valley Gutter

345 ADJUSTING FRAMES, COVERS, VALVE BOXES, WATER METER BOXES AND PULL BOXES

345.1 Description: REPLACE the second paragraph with the following:

All frames, covers, valve boxes, manholes, etc., shall be adjusted to finished grade after placement of asphalt concrete surface course by the Contractor in accordance with the Standard Details.

The Contractor shall remove old frames and covers and install new frames and covers in accordance with standard detail drawings.

345.3 Adjusting Frames: REPLACE the second paragraph with the following:

Frames shall be set to the elevations and slopes established by the Engineer and shall be firmly blocked in place with masonry or metal supports. Spaces between the frame and the old seat shall be sealed on the inside to prevent any concrete from entering the hand hole or manhole. Class AA concrete shall be placed around and under the frames to provide a seal and properly seat the frame at the required elevation and slope.

A single No. 4 rebar hoop will be placed in each concrete collar in accordance with the respective detail. The hoop diameter shall be such that its placement is centered between the edge of the manhole frame or valve box, and the outer edge of the concrete collar, the depth of the hoop shall be centered in the thickness of the collar. Each concrete ring shall be scored radially at quarter-circle points. Score lines shall be ¼ -inch wide by ½ - inch deep. The concrete collar surface shall be rough broom finished. (See COP Standard Detail 270P and 4-05P).

Existing frames and covers shall be salvaged to the City. All salvaged items shall be delivered to the City of Prescott Wastewater collections, 1505 Sundog Ranch Road and placed as directed by the Engineer.

REPLACE the fourth paragraph with the following:

After removal of the temporary asphalt pavement in the area of adjustment, and prior to placement of the final concrete collar ring (as shown on COP Standard Details 270P and 4-05P) the asphalt pavement in proximity of the adjustment shall be rolled with a self-propelled steel wheel roller if requested by the Engineer.

Traffic shall not be allowed on the concrete collars until the concrete had reached a minimum compressive strength of 2500 psi on residential and 3000 psi on collector and major streets. On major streets the contractor shall use "high-early" in the concrete mix, approved by the Engineer, to minimize delay in reopening the street(s) to traffic.

345.4 Adjusting Valve Boxes: REPLACE in its entirety with the following:

Valve boxes shall be adjusted to the new elevations indicated on the plans, or as established by the Engineer.

New valve box top risers and caps shall be furnished by the Contractor at existing water valve locations and placed as directed by the Engineer. New valve box top risers and caps shall be considered incidental to the cost of adjustment.

Existing valve box risers and caps shall be salvaged to the City. All salvaged items shall be delivered to the City of Prescott Water Operations, 1481 Sundog Ranch Road and placed as directed by the Engineer.

A single No. 4 rebar hoop will be placed in each concrete collar in accordance with the respective detail. The hoop diameter shall be such that its placement is centered between the edge of the manhole frame or valve box, and the outer edge of the concrete collar, the depth of the hoop shall be centered in the thickness of the collar. Each concrete ring shall be scored radially at quarter-circle points. Score lines shall be ¼ -inch wide by ½ - inch deep. The concrete collar surface shall be rough broom finished. (See COP Standard Detail 3-15P).

Traffic shall not be allowed on the concrete collars until the concrete had reached a minimum compressive strength of 2500 psi on residential and 3000 psi on collector and major streets. On major streets the contractor shall use "high-early" in the concrete mix, approved by the Engineer, to minimize delay in reopening the street(s) to traffic.

ADD the following Section:

345.4.1 Adjusting Meter Boxes:

Meter boxes shall be adjusted to the new elevations indicated on the plans, or as established by the Engineer.

Additional meter box sections, concrete, and miscellaneous items required to protect the utility in accordance with the respective standard detail shall be considered incidental to adjusting the meter box.

345.5 Adjusting Manhole and Valve Covers with Adjusting Rings:

REPLACE in its entirety with the following:

Existing sanitary sewer manhole and covers shall be salvaged to the City. All salvaged items shall be delivered to the City of Prescott Wastewater collections, 1505 Sundog Ranch Road and placed as directed by the Engineer.

Adjusting rings may be used to raise manhole covers in conformance to the dimensions noted on COP Standard Detail 4-03P. The amount of adjustment, thickness of seal or overlay, and cross slope will be considered when using adjusting rings. Each location where an adjusting ring is used must have a sufficient depth of asphalt to assure the proper installation and operation of the ring. The rings shall be made of concrete and installed per the manufacturer's specifications. The rings shall be approved by the Engineer.

The concrete collar ring around the frame or valve box shall be circular, shall be a minimum of eight (8) inches thick, struck off and finished 1/4" below with the adjacent new pavement surface. Concrete shall be a minimum of Class AA. All concrete shall be obtained from plants approved by the Engineer.

A single No. 4 rebar hoop will be placed in each concrete collar in accordance with the respective detail. The hoop diameter shall be such that its placement is centered between the edge of the manhole frame or valve box, and the outer edge of the concrete collar, the depth of the hoop shall be centered in the thickness of the collar. Each concrete ring shall be scored radially at quarter-circle points. Score lines shall be ¼ -inch wide by ½ - inch deep. The concrete collar surface shall be rough broom finished. (See COP Standard Detail 4-05P).

Traffic shall not be allowed on the concrete collars until the concrete had reached a minimum compressive strength of 2500 psi on residential and 3000 psi on collector and major streets. On major streets the

contractor shall use "high-early" in the concrete mix, approved by the Engineer, to minimize delay in reopening the street(s) to traffic.

345.6 Measurement: ADD the following:

Measurement for adjusting existing frames, covers, valve boxes, and water meter boxes to finished grade shall be the actual number of each type adjusted and accepted.

Measurement for adjusting new frames, covers, valve boxes, and water meter boxes shall not be measured as adjustment to finished grade is considered incidental to installation of the respective item.

345.7 Payment: ADD the following:

Pay Item: 345.3 Adjust Existing Frame and Cover

Pay Item: 345.4 Adjust Existing Valve Box and Cover

Pay Item: 345.4.1 Adjust Existing Meter Box

Pay Item: 345.5 Adjust Existing Manhole

350 REMOVAL OF EXISTING IMPROVEMENTS

REPLACE in its entirety with the following:

350.1 Description:

The work under this section shall consist of the removal, wholly or in part, and satisfactory disposal of all structures and obstructions within the right-of-way which have not been designated on the project plans or specified in the Special Provisions to remain, except for those structures and obstructions which are to be removed and disposed of under other items of work in the contract. The work shall also include salvaging of designated materials and backfilling the resulting cavities.

Existing structures, pavement, sidewalks, curbs, gutters and other existing improvements which are to become an integral part of the planned improvements shall remain even though not specifically noted.

Materials removed and not designated to be salvaged or incorporated into the work shall become the property of the contractor.

All existing utilities not designated for removal shall remain in place and be protected against damage.

The removal of existing improvements shall be conducted in such a manner as not to injure active utilities or any portion of the improvement that is to remain in place.

350.2 Construction Requirements:

Bridges, culverts and other structures in use by traffic shall not be removed unti l satisfactory arrangements have been made to accommodate the traffic. Blasting or other operations necessary for the removal of an existing structure or obstruction, which may damage new construction, shall be completed prior to commencing the new work.

Items designated to be salvaged shall be carefully stockpiled or stored by the contractor at locations designated in the Special Provisions or as directed by the Engineer.

Items which are to be salvaged or reused in the new construction and are damaged or destroyed as a result of the contractor's operations shall be repaired or replaced by the contractor at no additional cost to the City.

Holes, cavities, trenches and depressions resulting from the removal of structures or obstructions, except in areas to be excavated, shall be backfilled with suitable material which shall be compacted to a density of not less than 95 percent of the maximum density as determined in accordance with the requirements

of Section 601 or Section 211. Backfill of all excavated areas below structures shall be in accordance with Section 206.4.

350.3 Removal of Pavement:

A. Portland Cement Concrete Pavement:

Unless otherwise specified in the Special Provisions, concrete pavement designated on the project plans to be removed shall be removed from the job site and disposed of at a site secured by the contractor.

Where new construct ion is to join the existing concrete pavement, the pavement shall be saw cut to a true line perpendicular to the centerline of the pavement with straight vertical edges f ree from irregularities.

B. Bituminous Pavement:

Unless milling is noted on the plans or is a bid item, all bituminous pavement designated on the project plans to be removed, shall be completely removed down to the underlying base course or subgrade. The pavement material shall be removed and disposed of at a site secured by the contractor.

Where new construction is to join existing bituminous pavement, the existing pavement shall be cut to a true line perpendicular to the centerline of the pavement with straight vertical edges free from irregularities. The removal of asphaltic concrete at the approaches to structures shall be accomplished in a manner approved by the Engineer.

350.4 Removal of Storm Pipe and Culverts:

All removed pipe which is to be salvaged or re-laid shall be cleaned of all earth and other material inside and outside prior to being stockpiled or reused. Pipe to be reused shall be stored when necessary to avoid damage or loss before relaying.

Existing pipe to be partially removed shall be cut with straight and smooth edges on a plane perpendicular to the center line of the pipe.

Pipe that is not salvaged shall become property of the Contractor, removed from the project, and disposed of properly.

350.5 Removal of Miscellaneous Concrete:

Miscellaneous concrete shall be defined as all or portions of mortared rubble masonry, curbs, gutters, sidewalks, driveways, aprons, slope paving, island paving, retaining walls, spillways, drainage structures, concrete box culverts, foundations, footings and all other Portland cement concrete or masonry construction, except bridges and pavement. All existing miscellaneous concrete shall be removed to a depth of at least five feet below finished subgrade elevation unless otherwise noted on the project plans or special provisions. Other specification sections that discuss removal of concrete items shall supersede the provisions in this Section.

Where new concrete is to join existing concrete, the existing concrete shall be saw cut to a true line with straight vertical edges free from irregularities.

Concrete removal operations shall be performed without damage to any portion that is to remain in place. All damage to the existing concrete, which is to remain in place, shall be repaired to a condition equal to that existing prior to the beginning of removal operations. The repairing of existing concrete damaged by the contractor's operations shall be at no additional cost to the City.

Existing reinforcement that is to be incorporated in new work shall be protected from damage and shall be

thoroughly cleaned of all adhering material before being embedded in new concrete.

Concrete shall be disposed of as provided in Subsection 350.3.A.

The floors of concrete basements, pits and structures that are located within the right-of-way shall be completely removed.

350.6 Removal of Utilities:

Removal of water mains, sewer mains, and related appurtenances shall be in accordance with Sections 650 and 651, respectively.

All existing utilities not designated for removal shall remain in place and be protected against damage.

A utility may be abandoned in place below a new major structure that is part of the work only if approved by the Agency and solidly filled with grout using methods approved by the Agency. All abandoned utilities to remain and the approved abandonment method shall be noted on the installation record drawings.

Utilities to be removed by the Contractor shall be disconnected and taken out in accordance with the requirements of the utility owner to the limits shown on the plans. Utility removal shall not be performed until a release has been obtained from the utility stating that their respective service connection and appurtenant equipment have been disconnected, removed or sealed and plugged in a safe manner.

The Engineer shall be notified when utilities are encountered that are not shown on the plans.

350.6.1 REMOVAL AND DISPOSAL OF ASBESTOS CEMENT PIPE

A. BACKGROUND:

Asbestos-Cement Pipe (ACP) is a mixture of Portland cement and asbestos fibers. It was introduced into North America in 1931 and, by 1953, the American Water Works Association (AWWA) had established standards for ACP. Along with many other cities, ACP water mains were installed in the City of Prescott and as a consequence, we have a considerable quantity of this material in service. Some of these mains are old and need to be replaced; some are undersized and need to be upsized; and others are in conflict with new utility installations and need to be relocated. These actions require all or part of the existing ACP system to be removed and disposed. Subsequent to ACP's introduction into the United States, the Environmental Protection Agency (EPA) determined that asbestos, in an airborne condition, is a hazardous material and established laws/guidelines for the handling and disposal of the material. The Asbestos National Emission Standard for Hazardous Air Pollutants (NESHAP) establishes requirements for the removal and disposal of regulated asbestos containing materials. This Policy Statement establishes procedures and identifies responsibilities for the proper handling of asbestos-cement pipe in conformance with the Asbestos NESHAP requirements in effect as of November 1990.

NOTE: As used herein, the term "Engineer" shall refer to the City of Prescott Public Works Director or his/her designated representative. The term "Excavator" shall refer to that entity (individual or contractor) which actually excavates and exposes the pipe. The term "Generator" means any owner or operator of a source (covered by the regulation) whose act or process produces asbestos containing waste material. The term "extra cost" shall refer to the cost over and above the removal and disposal of the pipe in a non-friable state.

B. POLICY:

A. It is the intent of the City of Prescott to comply with the requirements of the Asbestos NESHAPS found at 40 CFR Part 61, Subpart M. This Policy Statement will establish procedures to be used by all Excavators in the removal and disposal of ACP in compliance with NESHAPS. Nothing in this Policy Statement shall be construed to void any provision of a contract or other law, ordinance,

regulation or policy whose requirements are more stringent.

B. ACP is defined under NESHPS as a Category II, non-friable, non-regulated material in its intact state but which may become friable upon removal, demolition, and/or disposal. Consequently, if the removal/disposal process renders the ACP friable, it is regulated under the disposal requirements of 40 CFR 61.150. If more than 260 linear feet of ACP is removed which on removal will become friable, a NESHAPS notification must be filed with the Yavapai County Environmental Services Department. The notification must be filed at least ten days prior to removal of the material. If it remains in its non-friable state, as defined by the NESHAPS, it can be disposed as a conventional construction waste. EPA defines friable as material, when dry, which may be crumbled, pulverized or reduced to powder by hand pressures.

C. The Generator of the hazardous material is responsible for the identification and proper handling, transportation, and disposal of the material. Therefore, it is the policy of the City of Prescott that if the actions of the Excavator cause the material to become friable, and therefore subject to the regulations, that Excavator becomes the Generator.

D. The requirements of Arizona Revised Statutes, Chapter 2, Article 6.3, Section 40-360.21 through 40-360.32 (Blue Stake Law) are important with respect to implementation of this Policy Statement. The Blue Stake Law mandates the Owner of the facility (in this case the City of Prescott) to maintain installation records and, upon request, to properly locate the underground facility. The Law also places requirements on the Excavator to:

1. Call the Blue Stake Center at least two (2) working days prior to the start of excavation.
2. Mark the boundaries of the location to be excavated.
3. Excavate in a careful and prudent manner, including hand digging within twenty-four (24) inches of the underground facility.
4. Notify the Owner if the Excavator encounters an underground facility that has not been located and marked or has been marked in the wrong location.

If the Excavator does not comply in full with the Blue Stake requirements and therefore causes non-friable ACP to become friable, any and all extra costs incurred to handle, containerize, transport, and dispose of the asbestos containing waste shall not be paid or reimbursable by the City. If Blue Stake requirements are met and ACP is accidentally or unknowingly disturbed thereby causing it to become friable, the Excavator may seek reimbursement from the City for additional costs to handle, containerize, transport and dispose of the material following the procedures described in Sections E and F below.

E. The Contractor shall retain the services of an independent, qualified, licensed asbestos abatement Consultant. All removal and disposal of ACP shall be under the cognizance of the Consultant. The Excavator is responsible to contact the Consultant a minimum of two (2) working days prior to the initiation of removal/disposal operations.

The Consultant will monitor the Excavator's work. If the ACP was not planned for removal and the Excavator accidentally disturbs the pipe, the Excavator will cease all work and notify the Engineer immediately for further instructions.

F. It is the intent of the City of Prescott that all ACP shall be removed in such careful and prudent manner that it remains intact and non-friable. The Excavator is responsible to deploy the means, methods, techniques, and sequences to ensure this result. When it is a practical impossibility, as determined by the Engineer, to remove the ACP without creating a friable material, the City will pay the Excavator for the removal of friable material in accordance with the measurement and payment section. The Excavator shall take steps to minimize the amount of the friable waste and abide with

all asbestos regulatory requirements. The Consultant shall be available to provide recommendations or suggestions, which the Excavator may or may not choose to deploy. The Consultant shall measure or otherwise assess and recommend to the Engineer the amount or percentage of friable waste for which the City should pay for removal and disposal with the remainder being the responsibility of the Excavator. If the ACP is caused to become friable, the Consultant shall conduct perimeter air monitoring upon request by the City. If the Excavator fails to notify the Consultant, fails to excavate and remove the ACP in a careful and prudent manner creating friable material or fails to abide with all asbestos regulatory requirement, the Excavator shall be deemed to be the Generator responsible to handle, transport and dispose of the ACP in accordance with the NESHAPS requirements and will not be reimbursed for any cost incurred. This will include all penalties and associated legal fees of the Generator as well as any penalties assessed against the City of Prescott, and any associated legal fees incurred by the City of Prescott for violation of any of the asbestos regulatory requirements that are caused by the Excavator.

G. ACP shall NOT be crushed and left in place.

H. Compliance with all aspects of worker safety and health regulations including but not limited to the OSHA Asbestos Standard is the responsibility of the Excavator. The City of Prescott assumes no responsibility for compliance programs which are the responsibility of the Excavator.

I. Payment for removal of non-friable existing asbestos cement pipe shall be at the unit bid price shown in the bidding schedule for complete removal, proper disposal and trench backfill in accordance with the specifications.

J. Payment for removal of friable existing asbestos cement pipe shall be a contingent item at the unit bid price shown in the bidding schedule for complete removal, proper disposal and trench backfill as determined by the Engineer in accordance with Paragraphs E and F and other provisions of the specifications.

350.7 Removal of Signs and Delineators:

Street signs, traffic control signs, traffic signal material and control devices shall be removed as designated on project drawings, salvaged and delivered to the City at the site designated by the Engineer. The contractor shall dismantle the sign panels and delineators and remove the sign posts from the ground in such a manner as to prevent damage to the posts. The contractor shall not remove remove the existing signs prior to the completion of the new sign installation, but shall remove them within five working days after the installation of the new signs or as directed by the Engineer.

350.8 Removal of Fence:

All fence to be removed, shall become the property of the contractor unless designated for salvage on the project plans. If fence is designated to be removed and salvaged, all fence, including gates shall be salvaged in accordance with the requirements of Subsection 202-3.01.

When designated for salvage, fence and gates shall be carefully dismantled and neatly rolled or coiled. Posts shall be cleaned of all concrete and dirt.

In areas where new fence or relocated fence is to be installed, Contractor shall perform the removals in such a manner as to prevent the escape of any livestock and/or domestic pets, including the placement and removal of temporary fence when necessary.

350.9 Removal of Guardrail:

All guardrail to be removed, shall become the property of the contractor unless otherwise specified on the project plans.

If guardrail is designated to be removed and salvaged, the contractor shall carefully dismantle the guardrail

and remove the blocks and posts in such a manner as to prevent any damage to the removed items. The guardrail, including panels, end sections, posts and all hardware shall be salvaged in accordance with the requirements of Subsection 350.2.

350.10 Measurement and Payment:

No separate measurement or payment shall be made for removal of existing improvements unless otherwise noted on the plans or there being removal bid items. This work shall be considered incidental and included in the unit price bid for construction of the appropriate contract pay items.

Measurement for non-friable and friable asbestos cement pipe shall be by the lineal foot of pipe removed.

Payment for removal of non-friable existing asbestos cement pipe shall be at the unit bid price shown in the bidding schedule for complete removal, proper disposal and trench backfill in accordance with the specifications.

Payment for removal of friable existing asbestos cement pipe shall be a contingent item at the unit bid price shown in the bidding schedule for complete removal, proper disposal and trench backfill as determined by the Engineer in accordance with Paragraphs E and F and other provisions of the specifications.

Pay Item: 350.6.1 Removal, Disposal, and Backfill of Non-Friable ACP

Pay Item: 350.6.1a Removal, Disposal, and Backfill of Friable ACP

401 TRAFFIC CONTROL

401.1 Description: REPLACE with the following:

Traffic control during construction shall be performed in accordance with MAG Section 401 and the Manual on Uniform Traffic Control Devices for Streets and Highways, US Department of Transportation Federal Highway Administration, latest edition with the latest revisions, Arizona Department of Transportation Traffic Control Manual, the project plans, and as stated herein.

(A) Prior to beginning the project, Contractor shall submit for approval a Traffic Control Plan for the entire project. He must obtain approval from the Engineer for the Traffic Control Plan and Schedule prior to any construction. Contractor shall submit the Traffic Control Plan to the Director of Public Works at or before the project preconstruction conference.

(B) Written notice shall be given to the Engineer or his representative on the job 48 hours prior to any changes in detours or routes of access. The notice shall give specific details with maps showing the access to all residences and businesses affected by the project.

(C) The Police and Fire Departments shall be continually updated on access routes along and through the site during construction.

401.2 Traffic Control Devices: ADD the following:

(C) All traffic control devices required for the project shall be the responsibility of Contractor.

(D) When required to cross, obstruct, or close a street, traffic way, or sidewalk for a short duration that is approved by the Director of Public Works, the Contractor shall provide and maintain suitable bridges, detours or other approved temporary means for the accommodation of vehicular and pedestrian traffic.

(E) When traffic conditions at the construction site warrant the use of certified police personnel to direct traffic, arrangements shall be made with the City of Prescott Police Department, Yavapai County, or Department of Public Safety for off-duty officers.

401.6 Measurement: DELETE in its entirety

401.7 Payment: DELETE in its entirety

ADD the following:

401.6 Measurement and Payment:

Payment for traffic control shall be at the applicable unit price bid in the Contract Documents.

1. Preparation of traffic control plan shall be inclusive of all submittals, reviews and if needed, re-submittals.

2. Flaggers shall be per hour for actual time directing traffic. It does not include travel time or time spent setting up or taking down devices.

3. In the event off-duty police personnel are required to direct traffic, the Bid Schedule includes an allowance for Certified Police Personnel for the purpose of encumbering funds to cover the cost of Certified Police Personnel. The amount of the allowance is determined by the Engineer and is not subject to individual bid pricing. All bidders shall incorporate the amount in the bid proposal and shall reflect the same in the total bid for this project.

   It shall be understood that this allowance is an estimate only. The allowance shall be not used without approval of the Engineer.

   Reimbursement for Certified Police Personnel shall be based on actual cost, plus an allowable markup to the prime contractor of 15%, for use of Certified Police Personnel approved by the Engineer.

   Flagmen, uniformed off-duty law enforcement officers or pilot cars, with driver, will be measured by the hour for each individual, including vehicle and equipment, required to perform traffic control. When an officer is used less than 3 hours, a minimum of 3 hours will be charged. Anything over 3 hours will be measured by the hour.

   Payment will be made at the contract bid price in the proposal for uniformed, off-duty law enforcement officer. If the officer is utilized in excess of 8 hours in any calendar day or in excess of 40 hours in any calendar work week, payment shall be at the rate of 1 1/2 times the contract bid price for all hours worked in excess in either of the above time periods.

4. Barricades and storage shall be at the lump sum bid and shall be inclusive of all temporary signs and devices in the traffic control plan and as required by the MUTCD and the Engineer.

5. Message boards shall be measured by each per day as determined necessary by the approved traffic control plan and the Engineer.

6. Pilot car and driver shall be per hour for actual time used as required by the approved traffic control plan and the Engineer. It does not include travel time or time spent setting up or taking down devices.

7. Incidental traffic related items shall include all other pertinent tools, equipment, devices and or work required to provide safe and effective traffic control in accordance with the approved traffic control plan, the MUTCD and the Engineer.

Pay Item: 401 Traffic Control Plan (LS)

Pay Item: 401.2a Barricades and Storage (LS)

Pay Item: 401.2b Message Boards (each per day)

Pay Item: 401.2c Incidental Traffic Related Items (LS)

Pay Item: 401.3a Flaggers (HR)

Pay Item: 401.3b Off Duty Police Officers (HR)

Pay Item: 401.3c Pilot Car and Driver (HR)

402.2 THERMOPLASTIC PAVEMENT MARKINGS

A. Work under this item shall be performed per ADOT Specifications Section 704.

1. Stop Bars and Crosswalks - Work under this item shall consist of the application of thermoplastic striping material at the locations noted on the project plans. All stop bars shall be 18 inches in width unless otherwise specified. Crosswalks shall be 12 inches in width.

2. Measurement shall be in accordance with ADOT Section 704-5 (Width times Length divided by 4 inches equals LF as shown in bid schedule).

3. Pavement Markings - Pavement markings shall be in accordance with ADOT Section 704-4, ADOT 4-M 1.12 through 4-M 1.17 and as modified herein. Work under this item shall consist of the application of thermoplastic striping material at the locations noted on the project plans.

Measurement and Payment:

Measurement and payment for pavement markings shall be at the per each basis for each legend or marking installed in accordance with ADOT Section 704-5.

Pay Item: 402.2 Thermoplastic Striping

402.3 TEMPORARY STRIPING

A. Work under this item, Temporary Striping (paint) where required, shall be performed per ADOT Specifications Section 701-3.05.

Measurement and Payment:

Measurement and payment shall be per ADOT Section 708-4 and 708-5.

Pay Item: 402.3 Temporary Striping

402.4 PERMANENT PAVEMENT MARKINGS

A. Work under this item shall be performed per ADOT Specifications Section 708.

Measurement and Payment:

Measurement shall be in accordance with ADOT Section 708-4 (Width times Length divided by 4 inches equals LF as shown in bid schedule).

Payment shall be in accordance with ADOT Section 708-5.

Pay Item: 402.4 Permanent Striping

403.1 PERMANENT SIGNING, SIGN POSTS AND DELINEATORS

Work under this item shall be done in accordance with the project drawings and requirement of the Manual on Uniform Traffic Control Devices (MUTCD), MAG Detail 131, and ADOT Signing and Marking Standards.

A. General Signing Guidelines

1. All signing shall conform to the most recent editions of the publications shown above with regard to size, color, shape and placement.

2. All signs shall be new (other than those shown to be relocated). All new and relocated signs shall be mounted on new posts with new hardware. Signs designed for installation on existing street light poles shall be mounted with new hardware.

3. Traffic sign dimensions, colors and lettering shall conform to the latest MUTCD specifications. Traffic sign size shall be standard unless otherwise specified here or on the plans.

4. All non mountable curb section signs shall be located at least two (2') feet from the curb face to the nearest edge of the sign. All other roadways signs shall be mounted from six (6') feet to twelve (12') feet from the edge of the pavement to the nearest edge of the sign, unless otherwise noted in the sign summary table or on the plans.

5. Roadways with guardrail signs shall be located at least six (6') feet from the face of the guard rail to the nearest edge of the sign, unless otherwise noted in the sign summary table or on the plans.

6. Sign location shall be coordinated with landscaping plans to ensure sign visibility per AASHTO standards.

7. Signs shall be mounted on street light poles whenever feasible.

8. All signs installed in areas where parking or pedestrian movements occur shall typically be erected at a height of seven (7') feet above the normal edge of pavement or sidewalk to the bottom of the sign or to the lowest sign in a multiple sign installation assembly with the following exceptions:

    a. The height to the bottom of a secondary sign mounted below another sign may be up to two (2') feet less than the height specified above.

    b. If the bottom of a secondary sign that is mounted below another sign is mounted lower than 7 feet above a pedestrian sidewalk or pathway, the secondary sign shall not project more than four (4") inches into the pedestrian facility.

    c. Object markers shall be installed at least four (4') feet above the normal edge of pavement.

9. All R1-1 "STOP" signs and pedestrian warning signs shall be reflective with all reflective sheeting material to be diamond grade.

10. All other signs are to be reflective with all reflective sheeting material to be high intensity prismatic meeting or exceeding ASTM 4956-04.

11. Sign blanks shall be 5052-H38 alloy treated aluminum with Alodine 1200 conversion coating, 0.080" thick with rounded corners.

12. Stop signs are to be shown at all local street intersections within a subdivision unless an engineering study shows that no control or yield control is warranted. Stop signs shall be designed and shown at all collector and non signalized arterial street intersections.

13. Stop signs and Yield signs shall be a minimum of thirty (30") inches in width. When specified by the City Traffic Engineer thirty-six (36") inch and/or forty-eight (48") inch signs may be required on major collectors and arterial streets.

B. SIGN POSTS

1. Sign posts shall conform to the COP Standard Detail 821P.

2. For new construction the Telspar, Uni-strut or approved equal twelve gauge, galvanized steel, four (4) sided perforated square tubing is required. Two (2") inch tubing shall be used for smaller signs while two and one-half (2½") inch tubing shall be used for the larger signs.

3. The post shall be tall enough to provide the minimum clearances specified in section A (8).

4. The base and sleeve system for the sign shall be anchored in a minimum of a twenty-four (24") inch deep, twelve (12") inch diameter foundation of concrete. The base shall have a breakaway slip base system. The exposed post from the base shall be four (4") inches to six (6") inches high.

5. Signs over forty-eight (48") inches wide shall be mounted on two (2), two and one-half (2½") inch posts with a horizontal support frame.

6. All station locations are approximate. The Contractor shall verify actual sign locations with the Engineer prior to the installation of all signs.

7. The Contractor shall verify post lengths and elevations prior to installation.

Measurement and Payment:

Measurement and payment shall be the unit price per each for posts and delineators and per square foot for sign panels, complete and in place.

Pay Item: 403.1a Sign Posts and Delineators

Pay Item: 403.1b Sign Panels

404 LOOP DETECTORS

A. Loop detectors shall be installed in base course of asphalt concrete pavement and conform to ADOT Specs Section 735 and 732-2.01, ADOT Traffic Signal and Lighting Standard Drawings (1985) 7-1. All loop detectors shall be installed per T.S. 7-1 Detail 2. Installation shall include the home runs and installation of loop wiring into the existing signal cabinet. The hardwiring in the cabinet will be accomplished by City forces.

B. Prior to bidding the Contractor shall verify the location and layout of the existing detector loops and appurtenant home runs to ensure that home runs are re-established in their original configuration. Loop detectors shall be centered in lanes. Contractor shall verify loop layout with project inspector prior to installation.

Measurement and Payment:

Payment shall be made on a per each installed basis.

Pay Item: 404 Quadrapole Loop Detectors, Complete

405 MONUMENTS:

405.1 Description: ADD the following:

A. All efforts shall be made to protect survey monuments in hand holes from damage. Monuments shall be located and reset by a Registered Land Surveyor at the Contractors' expense if damaged, or where noted on plans.

405.4 Installation: ADD the following:

A. Existing property monuments disturbed or covered in the course of the work shall be located and reset by a Registered Land Surveyor or under the direct supervision of a Registered Land Surveyor. Monuments set shall be in accordance with Arizona Revised Statutes and Arizona Boundary Survey

Minimum Standards.

B. Survey monuments shall be Type "A" with cast iron frame and cover in accordance with COP Standard Detail 120-1, unless otherwise noted. Monuments shall be placed as shown on the plans.

405.2 Materials: REPLACE the second paragraph with the following:

Concrete shall be Class AA.

405.5 Payment: ADD the following:

No separate payment shall be made for resetting property monuments. This work shall be considered incidental and included in the unit price bid for construction or installation of the appropriate contract pay items.

Payment for survey monuments shall be based on a per each unit complete in place.

Pay Item: 405 Survey Monument

430 LANDSCAPING AND PLANTING

430.3.2 Seeding:

REPLACE in its entirety with the following:

430.3.2 Seeding (Hydraulic):

A. Seeding consists of furnishing and applying chemical fertilizer; furnishing and planting seed and furnishing, applying and affixing mulch. The areas to be seeded are disturbed or un-vegetated areas. Slopes are required to be seeded immediately upon completion; coordination with grading operations will be required.

Application rates of seed as specified are for Pure Live Seed (PLS). PLS is determined by multiplying the sum of the germination and hard or dormant seed by purity. Weed content of seed shall not exceed 0.5 percent. No substitution of species, strain or origin of seed will be allowed unless evidence is submitted in writing by the Contractor to the Engineer showing that the specified materials are not reasonably available during the contract period. The substitution of species, strains or origins shall be made only with the written approval of the Engineer, prior to making said substitution.

The seed shall be delivered to the project site in standard, sealed, undamaged containers. Each container shall be labeled in accordance with Arizona Revised Statues and the U.S. Department of Agriculture rules and regulations under the Federal Seed Act. Labels shall indicate the variety or strain of seed, the percentage of germination, purity and weed content, and the date of analysis, which shall not be more than 9 months prior to the delivery date.

B. SEED MIX

Botanical Name	Common Name	Seed/ Lb.	Rate/Acre-PLS (Pure Live Seed)
Agropyron dasystachym	Thickspike Wheatgrass	154,000	3.0
Bouteloua gracilis	Blue Gramma	825,000	2.0
Koeleria crisata	Prairie Junegrass	825,000	1.0
Mulenbergia wrightii	Spike Muhly	1,000,000	1.5
Festuca arizonica	Arizona Fescue	500,000	2.0
Sitnian hystrix	Squirrel Tail	192,000	4.0
Sporobolus cryptandrus	Sand Dropseed	5,298,000	0.75

C. Seed Supply Agreement:

The required species may be in short supply during this project. Therefore, the Contractor shall enter a contractual agreement with a seed collector/supplier that verifies that sufficient supply of specified plant materials will be available on or immediately prior to the seeding dates. This requirement shall be fulfilled within 45 days following the preconstruction conference in order to allow sufficient time for seed collection. The Contractor shall provide written notification to the Engineer verifying that the required species are available and secured for the project. The collection contractor shall test the seed for purity and viability and hold the seed in a manner which maintains its' viability. The Contractor shall submit purity and viability test results to the Engineer for approval prior to the initiation of seeding operations. If it is required to be held for more than a year from initial testing the seed shall be tested again for viability. The Contractor shall compensate the seed supplier a percentage of the seed cost to hold seed material and for the seed tests as identified in Basis for Payment.

D. General:

The slurry for the hydroseed process shall be as follows:

SLURRY MIX	RATE
Hydrofiber: Silva, Conwed, or Spray mulch x-100 wood fiber, or equivalent	800 lbs./acre
Tackifier:	80 lbs. active ingred./acre
Starter fertilizer: Ammonium Phosphate	16-20-0 200 lbs./acre
Seed mix:	As Specified
Soil conditioner	1000 lbs./acre

The seed shall be applied within 30 minutes after being combined with the slurry mix.

INGREDIENTS FOR SLURRY APPLICATION	PERCENTAGES (MINIMUM)
Nitrogen	5
Phosphoric Acid	3
Water soluble Potash	1
Humas	50
Humic Acids	15
Soluble Metallic Iron	1

E. Wood Cellulose Fibers:

Wood fiber mulch shall consist of a specially prepared wood fiber processed to contain no growth germination inhibiting factors. The mulch shall be virgin wood and be manufactured and processed so the fibers will remain in uniform suspension in water under agitation to form a homogenous slurry. The mulch shall have a pH range between 4.5 to 6.5.

When hydraulically sprayed on the ground, the material will form a blotter-like cover impregnated uniformly with seed. The cover will allow the absorption of moisture and allow rainfall to percolate to the underlying area.

F. Tacking Agent:

Binder shall be free flowing, non-corrosive powder produced from natural plant gum marketed under M-Binder, M145 Binder, AZ-TAC or approved equal. It shall have gelling properties to inhibit the tendency of water and fiber to move downhill as they are sprayed on steep slopes.

G. Construction Requirements:

1. General:

The Engineer will regularly observe the weighing of seed, mixing of slurry mix, and application of seed.

2. Seeding:

Seeding shall be done immediately following the final grading or disking of each cut slope and each fill slope. The soil surface shall be loose. The Contractor will be required to mobilize frequently to accomplish this goal. No seeding shall be carried out under wind conditions exceeding 5 m.p.h. Scheduling of seeding mobilization will be coordinated with the Engineer at the weekly construction meetings. In no case shall a decision by the Engineer relieve the Contractor from the requirement of seeding prior to measurable rainfall. If measurable rain falls prior to seeding, or if the surface of the graded area has formed a crust or slightly hardened surface, the Contractor shall be responsible for ripping, blading or loosening the ground surface, or otherwise repairing and/or preparing the affected areas for seed, after they adequately dry out and prior to seeding, at no cost to the Owner. The use of specialized equipment or manual methods may be required to prepare the surface for seeding, if seeding is not accomplished immediately after grading or disking.

Seed is to be accomplished during the window of June 1 to July 15 and November 1 to January 30. These windows are to allow expected seasonal rains to start germination process.

All areas disturbed by construction are to be seeded. This may be more area than shown on the plans. All areas are to be approved by Engineer. The Contractor shall coordinate seeding operations with slope construction so that the tops of cuts and toes of fills can be reached with hydroseed equipment.

Hoses may be used where heavy equipment cannot access.

3. Tillage:

All slopes steeper than 3:1 shall either have a loose, friable soil depth of 2" or more or be tilled a minimum of 4" in depth as they are constructed.

Tillage shall be accomplished with a ripper bar, chisel plow or harrow tool or with other equipment which will provide thorough soil cultivation.

Tillage shall be performed long the contour. The slopes behind guardrail, and in the ditch line in cut shall be left with roughened surface to aid in water absorption. Seeded areas which are not behind guardrail or between the ditch line and the roadway on a cut shall be left in a Firm surface free of foreign material that would interfere in the seeding operation.

No work shall be done when the moisture content of the soil is unfavorable or the ground is otherwise in a condition not conducive to tillage.

Planting:

The Contractor shall submit a batch (tank) mix for the Engineer’s approval prior to mixing any seed/mulch slurry. Batch mixing and coverage will be monitored throughout seeding operations. The Contractor is to coordinate monitoring with the Engineer in advance of mixing.

After the tillage is complete and accepted by the Engineer, seed shall be planted by slurry mix (cut slopes steeper than 3:1).

All areas to be seeded shall have a starter fertilizer of ammonium phosphate 16-20-0 applied at a rate of 200 pounds per acre and soil condition at the rate of 1,000 pounds per acre.

Any material sprayed on non-designated areas shall be immediately removed by the Contractor at his

expense. Non-designated areas include pavement, guardrails, signs, plants and existing vegetation.

Anchorage by Tacking:

Mulch shall be anchored by tacking using a slurry consisting of a minimum of 150 pounds of binder, 400 pounds of wood fiber mulch and 700 gallons of water per acre.

Preservation of Seeded Areas:

Any material sprayed on non-designated areas shall be immediately removed by the Contractor at his expense. Non-designated areas include pavement, guard rails, signs, plants, and existing vegetation.

Warranty:

The Contractor shall guarantee that 75% of the applied tackifier remain in place for a period of 30 days after acceptance of the seeding application, Any areas that have less than 75% of the tackifier remaining shall be reseeded, re-mulched and retacked at the Contractor's expense.

Areas that require reseeding and re-mulching under the warranty shall be done at no additional cost to the City of Prescott. The 30 day period(s) shall be within the allotted contract time.

Measurement and Payment:

Seeding will be measured by the acre, to the nearest tenth acre, measured along the ground surface for the areas which have been plated and mulched, as determined by the Engineer. The Contractor may be reimbursed a partial payment based on the invoice amount for the cost to hold and test the seed in conformance with the Seed Supply Agreement.

The accepted quantities of seeding, measured as provided above, will be paid for at the contract price per acre for the full performance of the work herein described, which price shall be full compensation for the work completed including all equipment, labor and materials required.

Pay Item: 430.3.2 Seeding (Hydraulic)

ADD the following Section:

431 REMOVE AND REPLACE LANDSCAPE ROCK

Landscaping shall be protected and restored in accordance with Section 107.9. Existing landscaping rock shall be removed, stockpiled, and replaced in its original position as closely as possible.

Measurement and Payment:

Payment shall be per lump sum amount.

Pay Item: 431 Remove and Replace Landscape Rock

505 CONCRETE STRUCTURES

505.1.1 Minor Structures: REPLACE with the following:

Concrete structures such as manholes, catch basins, median barriers, headwalls, cattle guards, and other miscellaneous structures as defined by the Engineer are hereby defined as Minor Structures. Minor structures shall be precast units. MAG Type D Catch Basins shall be cast-in-place. Cattle guards, median barriers, and headwalls, at the option of the Contractor, may be either constructed of cast-in-place concrete, or furnished as precast units. Precast units shall be fabricated in accordance with shop drawings submitted by the Contractor and approved by the Engineer, in accordance with the requirements of Section 105.2. All structures not defined as Minor Structures shall be classified as Major Structures.

505.1.1A CONCRETE DRAINAGE OUTLET/STRUCTURE

The work consists of constructing a concrete drainage outlet(s) and structure(s) as designated on the project drawings in accordance with MAG Specifications Sections 505, and 725 and as modified herein. All cast-in-place concrete shall be class "AA" 4,000 psi. Sub-grade and base materials under the structure shall be compacted to not less than 95% of the maximum dry density as determined by AASHTO T-99. No additional payment will be made for aggregate base materials required under concrete structures. The base material shall be considered incidental to the construction of this item and provided for in the unit price for the work. Measurement and payment under this item shall be to the nearest square foot complete in place in accordance with the respective detail for flat work, and per each unit installed for structures.

505.1.1B CONCRETE HEADWALL

Work under this item shall be in accordance with MAG Specifications Sections 505, 725, 726 and 727; MAG Standard Details 501-1 and 501-2; and the project drawings. Concrete shall be Class AA, 4,000 psi. Payment shall be made per each headwall installed complete in accordance with the respective detail.

505.1.1C CONCRETE CATCH BASIN

Work under this item shall be in accordance with MAG Standard Details 530 through 540-2, MAG Specifications Sections 505 and 725 and above mentioned specifications for Portland Cement Concrete. All grates shall be bicycle safe type. Measurement and payment under this item shall be per each catch basin complete in place in accordance with the respective detail, to include grates.

505.1.1D SCUPPER

Work under this item shall be in accordance with MAG Standard Detail 203 and 206. Concrete shall be Class AA, 4,000 psi. Measurement and payment under this item shall be per each scupper installed complete in place in accordance with the respective detail.

505.1.1E CONCRETE RETAINING WALL

Work under this item shall be in accordance with the project drawings. Measurement and payment under this item shall be to the nearest square foot of the retaining wall measured from the top of the footing to the top of the wall complete in place in accordance with the respective detail.

505.6.2 Adverse Weather Concreting: REPLACE in its entirety with the following:

Adverse weather concreting shall be in accordance with Section 725.

505.12 Payment: Add the following:

Pay Item: 505.1.1A Concrete Drainage/Outlet Structure

Pay Item: 505.1.1B Concrete Headwall

Pay Item: 505.1.1C Concrete Catch Basin

Pay Item: 505.1.1D Scupper

Pay Item: 505.1.1E Concrete Retaining Wall

601 TRENCH EXCAVATION, BACKFILLING AND COMPACTION

601.1 Description: ADD the following:

A. Unless specifically identified, no investigation of subsurface soil conditions for water or sewer main

installation has been made for project limits.

B. Excavation, backfilling and compaction shall be in accordance with this Section and COP Standard Details as noted.

C. All water encountered during the work shall be disposed of by the Contractor in a manner such that it will not damage public or private property or create a public nuisance or health problem. The costs of furnishing pumps, pipes, special bedding, and over excavation as required to provide a stable foundation, and other equipment and materials shall be incidental to the work in accordance with Section 200.1 of these specifications.

601.2.3 Trench Grade: REPLACE the first paragraph with the following:

All construction staking shall be in accordance with Specification Section 105.8.

REPLACE the second paragraph with the following:

For all pipe, the Contractor shall excavate for and provide an initial granular bedding at least 6 inches thick. This bedding material shall be placed at a uniform density with minimum compaction and fine graded as specified below.

601.2.5 Over Excavation: REPLACE the second paragraph with the following:

Unauthorized excavation below the specified grade line shall be refilled at the Contractor's expense with bedding material compacted to a uniform density of not less than 95 percent of the maximum density as determined by AASHTO T-99 and T-191 or ASTMD6938. When AASHTO T-99, method A or B, and T-191 are used for density determination, ARIZ 227c will be used for rock correction.

ADD the following Section:

601.2.11 ROCK EXCAVATION FOR UTILITY AND/OR DRAINAGE CONSTRUCTION

A. Definition of Rock.

When rock is encountered, it shall be stripped of earth and shale, and the Engineer notified in order that he may measure or cross-section the same. In lieu of stripping the earth overburden prior to excavation/blasting, the Engineer and the Contractor may mutually agree on a method to define the vertical limits of rock. Any rock excavated before such measurement or agreement is made, will not be estimated, allowed, or paid for. Rock excavation shall be defined to include: all hard, solid rock in ledges; bedded deposits and unstratified masses; all natural conglomerate deposits so firmly cemented as to present all the characteristics of solid rock; and masonry or concrete structures not shown on the plans. Shales, hard pan, masonry and concrete rubble boulders less than one cubic yard which are not a part of or attached to substrata of rock, shall not be considered rock excavation. Additionally, material to be considered "rock" shall be of such hardness that it cannot be excavated using hydraulic backhoe with combined breakout force, for bucket and stick cylinders, of at least 100,000 pounds.

B. Blasting

1. It is the Contractor's responsibility to determine the type of material he will encounter and whether blasting will be necessary.

2. Blasting shall be done only by experienced, qualified blasters. Blasting shall be done in accordance with the recommendations for best practice in Section 9 of the AGC Manual of Accident Prevention in Construction and in accordance with the recommendations for best practices of the Institute of Makers of Explosives. Also, all blasting must comply with the requirements of the Division of Industrial Safety and OSHA and all other federal, state and local ordinances.

3. When work requires blasting or explosive conditions, precautions shall be taken to protect life and

property, and give proper warning to persons who may be in vicinity of work before blast is set off.

4. Blasting shall be performed in such a manner that no damage will result to any building, structure, pipeline, or facility on or off the site of work, above or below ground. Any damage suffered as a result of blasting shall be immediately settled, including repair or replacement.

5. Blasting shall be done in such a manner that the earth is not loosened or disturbed below the footing or foundation of any proposed structure. Loosened material below footings or foundations shall be replaced with Class C concrete.

6. The stemming of each hole or cover over explosive shall be sufficient to prevent surface blast wave, but in no case less than three (3) feet six (6) inches. Multiple holes shall be shot using millisecond delays.

7. The Contractor shall enlist the services of an experienced explosives engineer for advice on blasting methods and for the protection of existing structures or facilities.

8. Blasting procedures shall comply with all rules and regulations as specified and determined by the Fire Marshall or the Public Works Director of Prescott.

601.4.2 Bedding: REPLACE the first two paragraphs with the following:

Bedding shall be a minimum of six inches and shall be in accordance with COP Standard Detail 2-01P for paved areas and COP Standard Detail 2-02P for unpaved areas. Bedding/shade material shall be of granular consistency such as sand or crushed aggregates conforming to the following gradation and plasticity requirements:

Sieve Size	Percentage Passing By Weight
1"	100
No. 200	< 25
PI	10 Max.

Volcanic cinders or glass materials are not acceptable.

Use of open graded rock i.e., 3/8" pea gravel or 3/4" rock must be approved by the engineer prior to placement and will be considered only in special circumstances.

Water consolidation by any means shall not be permitted.

Bedding and shading material shall not be considered “corrosive” or “aggressive” soil per the definitions in AWWA (including C105), DIPRA and other similar standards and industry accepted documents. The CONTRACTOR shall submit material certification documents from the bedding and shading material supplier indicating that the bedding and shading material to be provided is not considered “corrosive” or ”aggressive” soil to ferrous metals, and shall include the pH, resistivity, oxidation/reduction, and sulfide values of the material within the certification package. Upon delivery of the material, the Contractor’s geotechnical engineer shall provide quality control testing by testing samples of the bedding/shading material for corrosivity. Contractor’s geotechnical engineer shall provide a letter sealed by a registered professional engineer, licensed in the state of Arizona, that the bedding/shading material is not corrosive to ferrous metals as defined by AWWA C105. If the material is found to be corrosive, the Contractor must install polyethylene encasement per Section 610.6 at no additional cost to the City. Testing shall occur a minimum of every 1,000 linear feet of pipe installed.

601.4.3 Backfill: REPLACE in its entirety with the following:

Backfill material shall be in accordance with COP Standard Detail 2-01P for paved areas and COP Standard Detail 2-02P for unpaved areas. In paved areas, backfill from 1-foot above the pipe to the bottom of the base course shall be non-shrink slurry backfill compacted in 1-foot lifts. In unpaved areas, backfill from 12-inches above the pipe to 6-inches below existing grade shall be minus 3-inch native material similar in nature to material existing prior to excavation.

Trench backfill quality control testing frequency shall be one per soil type for Proctor Density testing and one per 1-foot vertical lift per 200 linear feet of trench.

601.4.4 Compaction Densities: REPLACE in its entirety with the following:

All backfill material with the exception of non-shrink slurry backfill shall be compacted to 95% maximum dry density per ASTM D-698.

601.4.5 Compaction Methods: REPLACE in its entirety with the following:

Water consolidation by any means shall not be permitted.

601.7 Payment: REPLACE in its entirety with the following:

ADD the following Section:

601.7 Measurement:

No separate measurement or payment shall be made for trench excavation, backfilling, compaction, or placement of temporary pavement. This work shall be included in the respective unit bid price for water, sewer, or storm main and lateral construction.

Rock excavation within the roadway excavation limits shall not be measured separately. It will be included in Roadway Excavation. No separate payment will be made for roadway rock excavation. It shall be combined as one item under roadway excavation.

Rock Excavation within structural excavation limits shall not be measured separately. It will be considered incidental and shall be included in the appropriate bid item.

Rock excavation within trenches shall be measured in accordance with the following:

a. Width of trench for rock excavation shall be based on pipe outside diameter plus 24 inches.

b. Depth for rock excavation shall be actual depth from top of rock to bottom of rock, or to bottom of normal bedding section, whichever depth occurs first.

601.8 Payment:

Payment for rock trenching shall be at the unit price bid per cubic yard which shall include the cost of blasting, excavation, removal, hauling and disposal.

Pay Item: 601.2.11 Rock Removal (trench)

610 WATER MAIN CONSTRUCTION

610.1 Description: REPLACE in its entirety with the following:

Water main construction shall be in accordance with all applicable standard specifications and COP Standard Details.

610.3 Materials REPLACE the second paragraph with the following:

(A) Water Main piping shall be slip joint Class 350 ductile iron unless otherwise noted on the project plans, in accordance with MAG Section 610 and 750. Trace wire per COP Standard Detail 3-19P shall be required for all water main installations. Water main piping shall be furnished new in full lengths with manufacturer, class rating, and all other applicable information clearly marked on the barrel. Water main piping for 2-inch shall be copper in accordance with MAG Section 754 and encased in polyethylene protective wrapping in accordance with MAG Section 610.6.

REPLACE the third paragraph with the following:

Ductile iron water pipe and fittings - Section 750. Concrete pressure pipe-steel cylinder type - Section 758.

ADD the following:

(C) All ductile iron water main and fittings shall be encased in polyethylene protective wrapping in accordance with MAG Section 610.6 where called for on the plans or after contractor testing of bedding and shading material is found to be corrosive in accordance with AWWA C105.

All copper and brass water main and fittings shall be encased in polyethylene protective wrapping in accordance with MAG Section 610.6.

(D) All water mains shall have NSF-PW seal clearly marked on each barrel and installed with trace wire in accordance with COP Standard Detail 3-19P.

(E) Thrust restraint shall generally be accomplished through the use of restrained joints in lieu of thrust blocking. The preferred joint restraint system shall be "Field-Lok" gasket or approved equal except that vertical deflections, tees, valves and bends shall be restrained utilizing Mega-Lug, as manufactured by Ebba Iron, or equal.

(F) Required minimum lengths of joint restraint shall be per MAG Standard Detail 303. In locations where lines perpendicular to main lines are shown as restrained, the main line piping shall be restrained for a minimum of 10 feet or one joint (whichever is greater) each side of the main line “Tee”. Concrete thrust blocking will be required at connections to existing lines at the locations noted on the plans. Thrust blocks placed at these connections shall be in conformance with MAG Details and shall be adequately braced to allow system operation during curing of the concrete thrust blocks. Heavy plastic sheeting shall be used to wrap fittings to be restrained with thrust blocks to prevent covering with concrete on nuts and threading on fittings.

(G) All lateral water main connecting piping, valves and fittings shall be constructed using restrained joints from the main line “Tee” to the connection point at the existing water main at the locations shown on the plans.

(H) Prior to ordering of materials and scheduling connections to existing water mains and services, the contractor shall complete investigations to verify the size, type and location of the existing water mains and services.

(I) COP Technical Specifications for “Air Release Valves” is expanded to include Combination Air Release-Vacuum Breaker valves at the locations shown on the plans constructed as shown in Detail 3-17P.

(J) Payment for water main shall be at the unit price in the bidding schedule and shall include all connections, fittings, joints, flanges, thrust restraint and incidentals unless specifically itemized in the bidding schedule.

610.4 Construction Methods: REPLACE the first five paragraphs with the following:

All water mains shall have a minimum cover of 48 inches over the top of the pipe.

Cover for water mains will be measured from existing or proposed finished grade of pavement or from

natural ground, whichever is deeper.

No water main shall be deflected, either vertically or horizontally, in excess of 80% of the manufacturers' recommendation for the pipe or coupling, without the appropriate use of bends or offsets.

REPLACE the twelfth (12th) paragraph with the following:

All corporation stops used for testing and chlorination shall be removed and a stainless steel full circle repair clamps shall be installed.

DELETE the fifteenth (15th) paragraph in its entirety.

ADD the following:

(C) The existing water main shall not be taken out of service prior to completion and ADEQ Approval to Operate the replacement water main and connection of all water services and fire hydrants to the replacement system.

(D) The existing water system shall not be taken out of service at any time without the approval of the Engineer. With the approval of the Engineer, the existing water main may be taken out of service for limited periods to facilitate project construction. City water Operations shall be contacted a minimum of 48 hours prior to a planned water service disruption.

(E) The Contractor shall prepare and submit to the Engineer a plan for each connection to the existing system which demonstrates the ability to complete all work within the allowed period.

(F) All temporary connections and/or elements which must be placed in service prior to full system disinfection, testing and approval shall be disinfected in accordance with Paragraph 4.7 of AWWA C651 after approval of the engineer.

(G) All existing water service connections shall be replaced in accordance with the provisions of the COP Technical Specifications for "Water Service Replacement".

610.5 Separation:

610.5.1 General: ADD the following:

Concrete encased water mains that cross storm drains and/or other dry utilities which clear the crossed line by less than 12 inches shall incorporate a 6" sand pad to break the frictional contact.

610.9 FIRE HYDRANTS

ADD the following:

(A) Hydrant installation shall be in accordance with COP Standard Details 3-07P, 3-08P, 3-10P, and as specified on the project plans. Hydrants shall be Waterous, Mueller, East Jordan, or as approved by the Engineer.

(B) All ductile iron water pipe used in fire hydrant installation shall be Class 350.

(C) All new fire hydrants and connecting piping shall be constructed using restrained joints from the main line "Tee" to the hydrant.

(D) Payment for hydrant installation shall be at the unit price in the bidding schedule and shall include the hydrant, piping, valve, box and cover, and all appurtenant fittings, as noted for a complete assembly.

610.11 METER SERVICE CONNECTIONS

REPLACE 610.11(A) with the following:

A. Type K soft copper pipe or tubing shall be used except as otherwise called for on the plans.

REPLACE 610.11(B) with the following:

B. When the existing main is not abandoned and the existing meter is to be connected to the new line, the corporation stop and saddle shall be removed and a stainless steel full circle repair clamp shall be installed.

ADD the following:

(E) Water Service Connection

1) New Water Service shall be in accordance with COP Standard Detail 3-16P. All service piping and fittings from main tap to meter box shall be encased in polyethylene protective wrapping in accordance with MAG Section 610.6. Existing water service shall be abandoned in place and existing meter box and cover shall be salvaged and delivered to the COP Maintenance Yard and placed as directed by the Engineer. The Contractor shall supply all necessary materials for new water service including service saddle, corporation stops, piping, meter yoke, boxes and covers, plus all appurtenant fittings to connect to customers existing service line. The Contractor shall maintain a minimum four (4) feet of cover material over water service and set new box and yoke as indicated on plans.

2) The Contractor shall take all necessary steps to maintain water service. Customers affected by water disruption due to water service installation/connection shall be notified by written flyer delivered by the Contractor a minimum of 24 hours in advance of scheduled water service disruption. The Contractor shall not disconnect or disrupt water service until new water main and services pass hydrostatic and disinfection tests and is accepted by the Engineer. Customers shall not be without water service for a total time period greater than 4 hours. The Contractor shall supply bottled potable water and temporary water service meeting all state health requirements for periods of water service disruption exceeding 4 hours. No separate payment will be made for water service maintenance or Contractor written notification of water service disruption.

3) No separate measurement or payment will be made for adjustment of new water meter boxes to finished grade. This work is considered as incidental to the construction of the water service replacement.

4) The Contractor shall install water service line from the main to the new water meter location and continue to a point after the existing water meter location. This point of connection shall be a maximum of ten feet (10') from the existing meter location. Contractor shall remove existing valves, pressure regulators, nipples, connectors, etc. and replace per specifications. All private service lines shall be Type "K" copper in accordance with MAG Section 754 and encased in polyethylene protective wrapping in accordance with MAG 610.6. The Contractor shall maintain a minimum of four (4) feet of cover material, including ditch inverts, over new private water service line and utilize existing in-situ material for backfill. The Contractor shall supply all necessary material for new private water service installation including a curb stop, plus an approved type pressure regulator, in an accessible box per COP Standard Detail 3-16P at the new meter box location and all appurtenant fittings to connect to existing service line.

5) The Contractor shall remove the existing water meter and reinstall in the new yoke at the new meter box location with all appurtenant fittings and adapters. The City shall supply the Contractor with new meters for use in new locations that were not previously served or there is no existing meter to remove.

6) The Customer Box called out in Standard Detail 3-16P for the curb stop and pressure regulator on the customer side of the meter box shall be minimum #1 box, and the curb stop, regulator, box and lid

shall be provided and installed by the Contractor.

7) The Contractor shall be required to distribute written notices approved by the Engineer to all customers 24 hours in advance of proposed private service line reconnection work.

8) Existing improvements disturbed by the Contractor shall be restored in "like kind" to the satisfaction of the Engineer. No extra payment will be made for restoring existing improvements in "like kind" to include concrete walkways, retaining walls, landscape improvements, etc.

9) It shall be the Contractor's responsibility to review existing water meter location and points of private service line reconnection locations and ascertain all work including existing improvement restoration costs to perform the private service line reconnection work as specified. Costs associated for private service line reconnection work shall be at the appropriate unit bid price in the bidding schedule and shall include private service line piping, curb stop and pressure regulator, plus all appurtenant fittings and existing improvement restoration work as specified.

10) The pressure regulators shall be set at 65psi. The Contractor shall bench-test or otherwise provide written verification from the supplier prior to installation that the pressure regulators have been set at the required psi.

11) Payment for new water service and reconnection shall be at the appropriate unit bid price shown in the bidding schedule and shall include service saddle, corporation stops, curb stops, piping, meter yoke, adapters, boxes, pressure regulator, plus all appurtenant fittings for complete assembly for connection to existing service line. Contractor to supply and install all fittings necessary to install meter into new yoke.

(F) Commercial Water Service (Greater than 2")

1) The Contractor shall install water service line from the main to the new water meter location and continue to a point after the existing water meter location. This point of connection shall be a maximum of ten feet (10') from the existing meter location. Contractor to furnish and install gate valve and Pressure Regulating Valve (PRV) after meter vault. PRV shall be installed in accordance with the International Building Code as adopted by the City of Prescott. All commercial service lines shall be a minimum of 4" Class 350 Ductile Iron Pipe in accordance with Section 610. The Contractor shall maintain a minimum of four (4) feet of cover material over new water service line and may utilize existing in-situ material for backfill provided it meets the project specification. The Contractor shall supply all necessary material for commercial water service installation including a customer shutoff valve and PRV, in an accessible vault per COP Standard Detail 3-06P at the new meter vault location and include all appurtenant fittings to connect to existing service line.

2) The Contractor shall be required to distribute written notices approved by the Engineer to all customers 24 hours in advance of proposed private service line reconnection work.

3) Existing improvements disturbed by the Contractor shall be restored in "like-kind" to the satisfaction of the Engineer. No extra payment will be made for restoring existing improvements in "like-kind" to include concrete walkways, retaining walls, landscape improvements, etc. It shall be the Contractor's responsibility to review existing water meter location and points of service line connection locations and ascertain all work including existing improvement restoration costs to perform the service line connection work as specified.

4) Measurement and Payment for commercial water service shall be at the appropriate unit bid price in the bidding schedule and shall include piping, customer shutoff valve, PRV and vault, including all appurtenant fittings and existing improvement restoration work as required.

(G) Traffic Rated Meter Box

1) Meter boxes located within traffic areas shall be Christy model B1324 by Christy Concrete Products or approved equal.

2) Pre-cast concrete meter boxes shall have H-20 loading and be constructed of high density reinforced concrete with a minimum compressive strength of 4,000psi. Covers to be furnished with the boxes shall be a steel checker plate, H-20 loading, and lid.

610.14 Blocking: REPLACE the first paragraph with the following:

All pipe lines, valves and fittings shall be restrained using mechanical joints, mechanical joint restraints, or gasket joint restraints in accordance with standard details.

610.15 TESTING

REPLACE the first paragraph with the following:

Water lines, including all fittings and connections to the water mains shall be tested for water tightness by subjecting each section to hydrostatic testing in accordance with applicable provisions of AWWA C-600, except as modified below, and the City Of Prescott Water Line Testing and Acceptance Procedures, and shall consist of pressure testing and allowance testing.

Testing shall be performed by the Contractor and shall be witnessed by the Engineer for approval.

Payment for testing of water mains shall be included in the unit bid price for water main construction

610.16 Disinfection Water Lines: REPLACE with the following:

Water main and services shall be disinfected in accordance with MAG Section 611 and the City Of Prescott Water Line Testing and Acceptance Procedures. The Owner or his representative shall perform the sampling for bacteriological and residual chlorine testing. The Contractor shall notify the Owner 24 hours in advance to coordinate disinfection testing.

All valves in the lines being disinfected shall be opened and closed several times during the 24 hour period of disinfection.

Payment for disinfection of water mains shall be included in the unit bid price for water main construction

610.19 Measurement and Payment: ADD the following:

Pay Item: 610 Water Main

Pay Item: 610.9 Fire Hydrant Assembly

Pay Item: 610.11.E Water Service Connection

Pay Item: 610.11.F Commercial Water Service

Pay Item: 610.11.G Traffic Rated Concrete Meter Box

615.1 SEWER LINE CONSTRUCTION

615.1 Description: REPLACE the second (2nd) paragraph with the following:

High density polyethylene (HDPE) pipe shall conform to Section 738. Vitrified clay pipe shall conform to Section 743. Polyvinylchloride (PVC) pipe and fittings shall conform to Section 745. Ductile iron pipe shall conform to Section 750.

ADD the following:

A. Sanitary sewer main construction shall be in accordance with all applicable COP Standard Details and

MAG Section 750. All sanitary sewer piping and fittings shall be ASTM 3034 SDR-35 PVC or AWWA C-151 ductile iron Class 350 with an epoxy coating (Protecto Coat 401, Series 431 Perma-Shield, or approved equal). Sewer pipe shall be furnished new in full lengths with manufacturer, class, rating and other pertinent information clearly marked on the barrel. All ductile iron sewer main shall be encased in polyethylene protective wrapping in accordance with MAG Section 610.6 where called for on the plans or after contractor testing of bedding and shading material is found to be corrosive in accordance with AWWA C105.

B. Field cuts and taps of Ductile Iron Pipe shall be re-coated with Protecto Coat 401, Series 431 Perma-Shield, (or approved equal) field kit in accordance with the manufacturer's recommendations.

C. Where noted on project plans, mechanical joint or restrained joint, Class 350, ductile iron sewer main shall be installed ten feet (minimum) each direction from water/sewer interface where vertical separation is less than two feet or until six feet of horizontal separation is attained per MAG Standard Detail 404.

D. The method of construction of manhole and sewer main replacements is of prime importance to the City of Prescott. Maintenance of sewage flows is critical and shall be the responsibility of the Contractor. The Contractor's construction schedule shall be phased as to allow for minimal pumping of sewage flows for manholes and sewer main under construction.

E. Payment for sanitary sewer main will be at the appropriate unit bid prices for sewer main, as shown in the bidding schedule and shall include all excavation, backfill and compaction in accordance with trench details and all materials necessary for installation of the new sewer main.

615.7 SANITARY SEWER SERVICE

DELETE the last sentence in the fourth (4th) paragraph.

ADD the following:

A. All new or replacement sewer services, and any existing sewer services disturbed during construction, shall be replaced to the location indicated on project plans with a new minimum four-inch (4") ASTM 3034 SDR-35 PVC or AWWA C-151 Ductile Iron, Class 350, with an epoxy coating (Protecto Coat 401, Series 431 Perma-Shield, or approved equal) sewer pipe, backwater valve, manufactured wye, and appurtenances in accordance with COP Standard Details 4-02P, 4-14P, 440-2P, 440-3P and 440-5P, except as modified herein.

B. If individual sewer service disruption is anticipated, the Contractor shall notify the property owner 24 hours in advance. Sewer service must be restored within four hours or some alternate means of sewage disposal provided to allow for the resumption of individual sewer service.

C. Payment for sanitary sewer service shall be at the unit price indicated on the bidding schedule for the sewer service installation, and shall include connecting each existing sewer service including all labor, material, equipment, removal of existing pipe, new pipe, coupling concrete reinforcement, new concrete encasement, fittings, by-pass pumping and other work required to connect the existing yard line service to the new sewer main.

615.9 Manholes: ADD the following:

A. The Contractor is to provide to the Engineer a detailed written description of the method of construction for manhole and sewer replacement for each individual area of work. This should include, but is not limited to the following:

1. Maintenance of sewage flows during construction and curing of concrete.
2. Type of concrete for manhole bases, i.e. pre-cast, "high early", etc.

3. Method of curing concrete, i.e. protection against freezing, development strength before barrels and cones are set, etc.

4. What steps will be taken to ensure the grade around the manholes will not sink when complete, i.e. compaction testing, special base preparation, etc.

615.11 Testing: REPLACE Section 615.11 in its entirety with the following:

1. Sanitary sewers shall be low pressure air tested in accordance with ADEQ Engineering Bulletin 11, Chapter IV and in accordance with the Arizona Administrative Code Title 18 Chapter 9 Part E301(D)(2)(j)(i), one-hundred percent (100%) of the total length of pipe shall be tested.

2. 100% of new sewer main construction, regardless of pipe material shall be deflection tested in accordance with the following:

   a. The pipe section to be tested shall be cleaned free of dirt, sand, water, or other foreign materials.

   b. Backfill and compaction will have been completed prior to testing. Initial tests will be done immediately upon completion of the first reach of pipe for each diameter to ascertain if the Contractor's means, materials and methods are producing the desired quality within permissible tolerances.

   c. Test mandrels shall be solid sleeve or cage type with outside diameter and type of pipe permanently and clearly identified on the mandrel body. Worn, damaged or deformed mandrels will not be allowed. The mandrel shall have a cable attached at each end to enable removal if it becomes stuck.

   d. For acceptance, the mandrel must pass through the entire section between manholes or other structures in one pass when pulled by hand, without the use of excessive force. All testing shall be witnessed by the Engineer or his representative and the Engineer reserves the right to order additional tests in excess of twenty percent of new main installed.

   e. Any section of the installation which fails to pass the deflection test will be repaired and retested.

3. Force mains shall be pressure tested at a minimum of 50 PSI above the design working pressure for two (2) hours in accordance with AAC R-18-9-E301.4.01.

4. Testing is considered incidental to the price bid for sewer main installation and no additional payment shall be made for this item.

615.11.1 Closed Circuit Television Inspection:

1. DESCRIPTION

This section defines the requirements for internal television inspection of the sewer main and service laterals after they have been installed for all new construction and shall include the connection point to the existing system. The Contractor shall inspect the sewer interior using a color closed circuit television (CCTV) camera and document the inspection on video with audio location and date information, video title information and hard copy inspection logs.

Upon completion of sewer main rehabilitation, the Contractor shall perform Closed Circuit Televising (CCTV) inspection for 100% of the newly rehabilitated sewer main to provide a video record and associated written report to become the property of the Engineer. The Engineer shall be notified a minimum of 48 hours in advance of proposed scheduled sewer camera inspection, so Engineer may witness the video recording. Any inspection completed without Engineer witnessing will not be accepted.

2. SUBMITTALS

a. The Contractor shall submit samples of main and lateral (if separate) inspection logs and reports for approval in accordance with Section 105.2.

A. The Contractor shall be responsible for modifications to his equipment and/or inspection procedures to achieve report material of acceptable quality. No work shall commence prior to approval of the material by the Engineer. Once accepted, the report material shall serve as a standard for the remaining work.

B. Contractor shall maintain a copy of all inspection documentation (reports, DVD,) for the duration of the work and warranty period.

C. Mainline inspection reports shall be provided by the Contractor and shall show all observations, at a minimum: project title, name of Owner, time of day, manhole-to-manhole pipe section, pipe segment length, pipe material, line size, compass direction of viewing, lateral identification and clock position, direction of camera's travel, pipe depth, name of operator and footage counter reading at the beginning and end of each manhole-to-manhole pipe segment. Report shall identify any deficiencies observed.

D. Video of sewer mainlines shall at a minimum include the following information: project title, time of day, pipe material, line size, compass direction of viewing, direction of camera's travel, and footage counter reading continuously through-out each manhole-to-manhole pipe section. The video shall pause at and identify all observations.

E. Service lateral inspection reports shall be provided by the Contractor and shall show all observations, at a minimum: project title, time and date, property address of service, manhole-to-manhole pipe section, pipe segment length, pipe material, line size, direction of camera's travel, name of operator and footage counter reading at the beginning and end of each service. Report shall identify any deficiencies observed.

F. Video of sewer lateral shall show, at a minimum: project title, street address, time and date, pipe material, line size, direction of camera's travel, and counter reading at the beginning and end of each service. The video shall pause at and identify all observations including the connection point to the existing service line.

b. The Contractor shall supply finished video recordings upon completion of sewer construction. Four (4) sets of the videos (DVD) and reports shall be submitted to the City.

3. EQUIPMENT

a. Cameras: For inspection of sewer, the camera shall be equipped with a rotating head, capable of 90-degree rotation from the horizontal and 360-degree rotation about its centerline. Minimum camera resolution shall be 400 vertical lines and 460 horizontal lines. The camera lens shall not have less than 140-degree viewing angle and shall have automatic or remote focus and iris controls. The focal distance shall be adjustable through a range of from 2 inches to infinity. Camera(s) shall be intrinsically safe and shall be operative in 100-percent humidity conditions. Lighting intensity shall be remote controlled and shall be adjusted to minimize reflective glare. Lighting and camera quality shall provide a clear, in-focus picture of the entire inside periphery of the sewer.

b. Recording Media: Video recordings of all sewer line inspections shall be made on DVD. The audio portion of the composite video shall be sufficiently free from electrical interference and background noise to provide complete intelligibility of the oral report. Each video shall be identified with labels showing the Owner's name, Contractor's name, Engineer's name and each manhole-to-manhole pipe segment of sewer line represented on the video. Each video shall be submitted at the completion of

the project for records.

c. Footage Counter: A footage counter device which measures the distance traveled by the camera in the sewer device shall be accurate to plus or minus 2 feet in 1,000 feet.

d. Depth Gauge: The camera shall be fitted with a depth gauge to identify sags present in the main lines. The gauge shall have ¼" increment markings to measure the depth of the pipe sag. The depth of the sag and location shall be noted as an observation and recorded on the report.

d. Video Titling: Video recording equipment shall include genlocking capabilities to the extent that computer generated data, (i.e., footage, date, size etc.) as determined by the Owner can be overlaid onto video, and both indicated on the television monitor and permanently recorded on the inspection video recording.

4. FLOW CONTROL

a. Flow control is required for TV inspection and for sewer line rehabilitation. Limited sewage flow, as defined below, is acceptable for TV inspection.

b. Depth of flow shall not exceed 40% of pipe diameter as measured in the manhole when performing television inspection.

c. Bypass pumping, if required, shall conform to the requirements of Section 200.2 and shall be incidental to Closed Circuit Television Inspection.

5. INSPECTION METHODS

a. The Engineer and the City's wastewater collection representative shall have access to observe the video monitor and all other operations at all times. The system of cabling employed to transport the camera and transmit its signal shall not obstruct the camera's view.

b. Contractor shall physically measure and record on the inspection log, the length of each sewer reach from the centerline of its terminal manholes.

c. The camera may travel through the sewer in either direction. Maximum rate of travel shall be 30 feet per minute when recording.

d. The camera image shall be down the center axis of the pipe when the camera is in motion. The Contractor is required to provide a 360-degree sweep of the pipe interior, at points of interest, in order to more fully document the existing condition of the sewer. Points of interest may include, but are not limited to, defects, encrustations, mineral deposits, debris, sediment and any location determined not to be clean or part of a proper line installation and defects in the liner including, but not limited to, bumps, folds, tears, dimples, etc.

e. The video and all inspection documentation should include the sewer line and manhole identifiers shown on the plans. After the rehabilitation of the sewer main is complete, the Contractor shall use the upstream manhole as the identifier in conjunction with the distance meter.

f. The City will review videos and logs to ensure compliance with the requirements listed in this specification and contract documents. If the sewer line, in the sole opinion of the City, is not adequately clean, it shall be cleaned and re-inspected by the Contractor at no additional cost to the Owner. If the construction work, in the sole opinion of the City, has not been properly installed, it shall be reinstalled and re-inspected by the Contractor at no additional cost to the Owner.

Final acceptance of the project will not be granted until sewer line video results, including any re-inspection of deficient sewer main, meet the satisfaction of the Engineer and are in accordance with this Section.

615.14 Measurement and Payment: ADD the following:

Measurement and payment shall be for the complete work of CCTV Inspection at the unit price in the bid schedule. Measurement for sewer main shall be linear feet from center of manhole to center of manhole. Measurement for service laterals shall be per each lateral.

Cleaning and bypass pumping for CCTV is incidental to video inspection and will not be measured or paid.

Pay Item: 615 Sanitary Sewer Main

Pay Item: 615.7 Sanitary Sewer Service

Pay Item: 615.8 Sanitary Sewer Cleanout

Pay Item: 615.11.1 Mainline Closed Circuit Television (LF)

Pay Item: 615.11.1a Service Lateral Closed Circuit Television (EA)

618 STORM DRAIN CONSTRUCTION

618.1 Description: ADD the following:

Work under this item shall be in accordance with Section 601 and as modified herein.

DELETE the second paragraph in its entirety.

618.2 Materials: REPLACE the first paragraph the following:

The concrete pipe, HDPE pipe, CMP pipe, specials, joints, gaskets, and testing shall be according with Sections 621, 735, 736, and 738 except as specified below or as modified by special provisions.

All CMP shall have $2^2/_3$" x ½" corrugations with a minimum gauge of 14. Steel lined or paved CMP will not be allowed.

(B): Rubber Gasket Joints: ADD the following:

(3) All joints for CMP shall conform to Section 621.3.1 and shall be watertight.

618.3 Construction Methods: REPLACE the first (1st) paragraph with the following:

Excavation, bedding, backfilling, and compaction of backfill and bedding of trenches shall be accomplished in accordance with Sections 601 and 603 for HDPE pipe, or as modified by special provisions.

618.6 Measurement:

Measurement shall be in accordance with Sections 618.6.

618.7 Payment: ADD the following:

Pay Item: 618 Storm Pipe

625 MANHOLE CONSTRUCTION AND DROP SEWER CONNECTIONS

625.1.1 Sewer Manholes: REPLACE in its entirety with the following:

Construction shall consist of furnishing all materials and constructing manholes complete in place, as detailed, including foundation walls, manhole frames, covers, and any incidentals thereto, at locations shown on the plans.

Sanitary sewer manhole construction shall be in accordance with COP Standard Details 4-03P, 4-12P, 423-1P, 423-2P, and 426AP. Final grade adjustment in roadway sections shall be in accordance with COP

Standard Detail 4-05P.

625.2 Materials: REPLACE in its entirety with the following:

Unless otherwise shown on the plans or modified by special provision, materials to be used shall conform with the following:

Cement mortar for manholes Class D, Section 776.

Concrete for manholes Class A, Section 725.

Pipe used in manholes or drop sewer connections shall comply with pipe requirements of Section 615.

Manhole frame, cover and steps, Section 787 and cast in accordance with standard details.

Plastic manhole steps, which conform to O.S.H.A. and A.S.T.M. C-487 requirements. The manufacturer shall furnish the Engineer a certification indicating conformance.

625.3 Construction Methods: REPLACE in its entirety with the following:

A. Manholes:

Manholes shall be constructed of precast concrete sections, frames and covers, in accordance with the standard details. The invert channels shall be smooth and semi-circular in shape, conforming to the inside of the adjacent sewer sections. Changes in direction of flow shall be made with a smooth curve, having a radius as large as the manhole will permit. Changes in size and grade of the channels shall be made gradually and evenly.

Invert channels may be formed of concrete having a smooth mortared surface, or may be constructed by laying a full section of sewer pipe through the manhole and cutting out the portion of pipe above the floor after the surrounding concrete has hardened. The floor of the manhole outside the channels shall be smoothed and shall slope towards the channels.

Existing manholes shall be totally removed, including the bases, and disposed of by the Contractor. Existing rings and covers shall be salvaged and delivered to the City Wastewater Collection Yard at 1505 Sundog Ranch Rd. No separate payment will be made for removing manholes or salvaging manhole rings and covers. The cost of this item of work shall be included in the cost of manhole construction.

The excavation shall be made cylindrical to a diameter sufficient in size to permit sheeting if necessary and leave room that the precast concrete sections may be properly assembled.

Concrete foundations shall be Class A concrete and in accordance with the Standard Details and Section 505 for both poured-in-place and pre-cast bases. Cast-in-place concrete bases and inverts shall cure for a minimum of 72 hours, depending on concrete development strength before barrels and cones can be placed and before sewage flows across the inverts.

Frame and Cover. All machined surfaces on the frame and cover shall be such that the cover will lie flat in any position in the frame and have a uniform bearing through its entire circumference. Any frame and cover which creates any noise when passed over by automobiles shall be replaced. Frames shall be set in accordance with COP Standard Detail 4-03P.

Backfilling shall be done in accordance with the requirements for trench backfilling as stated in Section 601. Quality control density testing shall be one test per 16-inches of fill, beginning at two (2) feet above the crown of the pipe. A minimum of two density tests are required for each manhole. Each density test taken shall be in a different quadrant of the manhole as the previous test. If four tests are required, each quadrant shall have a density test.

B. Watertight Ring and Cover

Installation of watertight ring and cover shall be in accordance with COP Standard Detail 4-03P and 4-03BP as indicated on the plans. Rings and covers shall be approved by the City prior to installation.

C. Drop Sewer Manholes

1. Drop manholes that intercept existing mains (upper invert) shall not have a block-out for the pipe during the casting process. Said manholes shall be core drilled in place once the appropriate invert elevation has been verified in the field.

   i. Core drilling shall not commence without approval from the Engineer.

   ii. The pipe shall be sealed at the penetration using a Link-Seal Modular Seal or approved equal.

2. Internal Drop

   i. Internal drop systems shall be installed in drop manholes where indicated on the plan sheets and accordance with COP Standard detail 426A-P.

   ii. Internal drop systems shall be constructed using Reliner Inside Drop System as manufactured by Reliner/Duran Inc or approved equal.

   iii. Manholes with internal drop systems require Internal Manhole Coating, and shall have the protective coating installed and tested prior to the installation of the drop system. Manhole coating shall be in accordance with Section 626.1.

D. Sanitary sewer cleanout shall be installed in accordance with COP Standard Detail 4-13P.

E. All water encountered during the work shall be disposed of by Contractor in a manner such that it will not damage public or private property or create a public nuisance or health problem in accordance with Section 220.1. The costs of special bedding, and over excavation as required to provide a stable foundation, and other equipment and materials shall be incidental to the work.

F. Testing of Sanitary Sewer Manholes.

All manholes installed shall be tested by exfiltration or by vacuum testing per ASTM C-1244-3 and in accordance with Arizona Administrative Code Title 18 Chapter 9 Part E301(D)(3)(e).

Testing of sanitary sewer manholes is considered incidental to the price bid for manhole installation and no additional payment shall be made.

625.5 Measurement: REPLACE in its entirety with the following:

Measurement of manholes shall be per manhole installed, complete in place regardless of depth.

Measurement of drop manholes shall be per manhole installed, complete in place regardless of depth.

Measurement for internal drops shall be per drop installed, complete in place regardless of depth.

Measurement for cleanouts shall be per cleanout installed, complete in place.

625.6 Payment: REPLACE in its entirety with the following:

Payment for manhole installation shall be at the appropriate unit bid price in the bidding schedule and shall include all excavation, backfill, installation, grade ring adjustment, and all necessary materials for complete manhole installation.

Payment for drop manhole installation shall be at the bid unit price and shall include all excavation, backfill, installation, internal coating, internal drop assembly, core drilling, grade ring adjustment, and all necessary materials for complete manhole installation

Payment for internal drop system in existing manholes shall be at the bid unit price and shall include complete installation of the internal drop assembly, and internal coating in accordance with COP Standard Detail 426A-P and all materials necessary for installation of the new drop sewer connections.

Pay Item: 625 Sanitary Manhole

Pay Item: 625a Sanitary Drop Manhole

Pay Item: 625b Internal Drop System

626.1 MANHOLE COATINGS

A. DESCRIPTION

1. This section specifies the coating system used for the lining of the manholes as indicated on the drawings. Contractor shall furnish all labor, materials and equipment required to clean, modify and coat the manholes. Contractor shall comply with the local authority and all Occupational Safety and Health Administration (OSHA) requirements for confined space entry. The coating shall yield a hard, durable chemical resistant coating and shall be specifically designed to be applied on a dry surface. The finish coating shall provide a watertight seal and shall adhere to all components of pipeline liner systems.

2. Specific coating terminology used in this section is in accordance with definitions contained in ASTM D16, ASTM D 3960 and the following definitions:

   a. Dry Film Thickness (DFT): The thickness of one fully cured continuous application of coating.

   b. Field Coat: The application or the completion of application of the coating system after installation of the surface at the site of the work.

   c. Shop Coat: One or more coats applied in a shop or plant prior to shipment to the site of erection or fabrication, where the field or finishing coat is applied.

   d. Tie Coat: An intermediate coat used to bond different types of paint coats. Coatings used to improve the adhesion of a succeeding coat.

   e. Photochemically Reactive Organic Material: Any organic material that will react with oxygen, excited oxygen, ozone or other free radicals generated by the action of sunlight on components in the atmosphere giving rise to secondary contaminants and reaction intermediates in the atmosphere which can have detrimental effects.

   f. Volatile Organic Compound (VOC) Content: The portion of the coating that is a compound of carbon is photochemically reactive and evaporates during drying or curing, expressed in grams per liter or pounds per gallon.

   g. Touch-Up Painting: The application of a paint on areas of painted surfaces to repair marks, scratches and areas where the coating has deteriorated to restore the coating film to an unbroken condition.

3. Quality Assurance

   a. References: This section contains references to the following documents. They are a part of this section as specified and modified. In case of conflict between the requirements of this section

and those of the listed documents, the requirements of this section shall prevail.

ASTM D 16-93 Standard Terminology Relating to Paint, Varnish, Lacquer and Related Products.

ASTM D 3359 A-92 Methods for Measuring Adhesion by Tape Test.

ASTM D 3960-92 Practice for Determining Volatile Organic Compound (VOC) Content of Paints and Related Coatings.

ASTM F 595 B-89 Federal Standard Colors.

b. Standardization: Materials and supplies provided shall be the standard products of manufacturers. Materials in each coating system shall be the products of a single manufacturer.

4. Delivery and Storage

a. Materials shall be delivered to the job site in their original, unopened containers. Each container shall bear the manufacturer's name, coating type, batch number, date of manufacture, storage life and special directions.

b. Materials shall be stored in enclosed structures and shall be protected from weather and excessive heat or cold. Flammable materials shall be stored in accordance with state and local codes. Materials exceeding storage life recommended by the manufacturer shall be removed from the site.

B. **MATERIALS**

1. The pre-approved coatings for the lining of manholes include; Sewer Shield Liner 150 as manufactured by Environmental Coatings, Mesa, Arizona, Sauereisen No. 210 as manufactured by Sauereisen, Inc., Pittsburgh, Pennsylvania or Raven 405 as manufactured by Raven Lining Systems, Broken Arrow, Oklahoma. The coating color shall be approved by the owner.

2. Primer shall be as recommended by the manufacturer for each application.

3. Defect filler shall be as recommended by the manufacturer for each application. The coating shall contain no more than 20% filler, sand; no fiberglass fillers.

4. Applicator Experience and Qualifications

The coating applicator must have a minimum of two (2) years experience in applying either the specified coating or an equivalent coating and shall be certified as an applicator by the manufacturer. They shall submit a successful performance history for the application of either the specified coating or a similar coating in the wastewater industry:

a. The coating applicator shall submit three (3) references relating to the quality of workmanship performed on other projects using the same coating being proposed or an equivalent coating.

b. The coating applicator shall be an Arizona Licensed contractor with an AE License or equivalent.

c. The coating Contractor shall submit a manufacturer's certification to apply the coating specified herein for each applicator involved in the coating process.

5. Product Data

Before materials are delivered to the job site, the Contractor shall provide the following information in accordance with these Specifications.

a. For the filler, primer and finish coating, the Contractor shall furnish a Material Safety Data Sheet (MSDS).

b. For the filler and finish coating, the Contractor shall provide the manufacturer's application instructions, which shall include the following:

(i) Surface preparation recommendations.

(ii) Primer type, where required.

(iii) Maximum dry and wet mil thickness per coat.

(iv) Minimum and maximum curing time between coats, including atmospheric conditions for each.

(v) Curing time before submergence in liquid.

(vi) Thinner to be used with coating material.

(vii) Ventilation requirements.

(viii) Minimum atmospheric conditions during which the coating shall be applied.

(ix) Allowable application methods.

(x) Maximum allowable moisture content.

(xi) Maximum storage life.

c. List of materials proposed to be used under this section and manufacturer's data for each material.

C. **COATING**

1. Coating products shall not be used until the Owner has inspected the materials and the coating manufacturer's technical representative has instructed the Contractor and Owner in the surface preparation, mixing and application of the coating. The coating manufacturer's technical representative must be a factory representative, not a local representative or an affiliate of the Contractor.

2. Field coats shall consist of one or more finish coats to build up the coating to the specified dry film thickness. Unless otherwise specified, finish coats shall not be applied until other work in the area is complete and until all previous coats have been inspected.

3. All items of equipment, or parts and surfaces of equipment, which are immersed when in service, with the exception of pumps and valves shall have all surface preparation and coating work, performed in the field.

4. Preparations

a. Surfaces to be coated shall be clean and dry. Before applying coating or surface treatments, oil, grease, dirt, rust, loose mill scale, old weathered coatings and other foreign substances shall be removed except as specified. Oil and grease shall be removed before mechanical cleaning is started. Where mechanical cleaning is accomplished by blast cleaning, the abrasive used shall be washed, graded and free of contaminants, which might interfere with the adhesion of the coatings. The air used for blast cleaning shall be sufficiently free of oil and moisture to not cause detrimental contamination of the surfaces to be coated. The Contractor shall examine all surfaces to be coated and shall correct all surface defects as required by manufacture before application of any coating.

b. Contractor shall protect the sewer from debris, overspray or any detrimental activity due to restoration of the manholes.

c. Holes shall be filled using a grout as recommended by the coating manufacturer, and approved by the Engineer. The grout filler shall be used to bring all areas of holes and pitting up to the

nominal surface of the manhole so that there is an even interior surface in the manhole without waves, pits or holes. Any exposed rebar shall be cleaned, and all areas of corrosion removed, prior to application of the grout as recommended by the coating manufacturer and approved by the Engineer.

d. After surface preparation is complete, all loose material shall be removed from the sewer and manholes.

e. The Contractor shall repair all defects in the coating system where directed by the Engineer.

f. Surface preparations for each type of surface shall be in accordance with the specific requirements of the coating system specification sheet (COATSPEC). COATSPEC shall be supplied by the manufacturer.

5. Application

a. The surface of the installed coating will be cleaned and prepared to permit visual inspection by the Engineer. Any areas of the coating showing poor adhesion, excessive air inclusion or edge or seam defects shall be properly repaired and re-inspected.

b. Coated surfaces shall be free from runs, drops, ridges, waves, laps and brush marks. Coats shall be applied so as to produce an even film of uniform thickness completely coating corners and crevices. Painting shall be done in accordance with the requirements of SSPC Paint Application Specification No. 1. SSPC Paint Application Specification shall be supplied by the manufacturer.

c. The Contractor's equipment shall be designed for application of the materials specified. The coating shall be obtained with the proper thickness and surface characteristics as recommended by the coating manufacturer.

d. Each coat shall be applied evenly and sharply cut to line. Care shall be exercised to avoid over-coating or spattering on surfaces not to be coated.

e. Film Thickness and Continuity: Coating system thickness is the total thickness of the finished coats. The surface area covered for various types of surfaces shall not exceed those recommended by the manufacturer. Coatings shall be applied to the thickness specified, and in accordance with these Specifications. In testing for continuity of coating about welds, projections (such as bolts and nuts), and crevices, the Owner will determine the minimum conductivity for smooth areas of like coating where the dry mil thickness has been accepted. This conductivity shall then be taken as the minimum required for these rough or irregular areas. Pinholes and holidays shall be repainted to the required coverage.

f. Safety and Ventilation: Requirements for safety and ventilation shall be in accordance with SSPC Paint Application Guide No. 3. SSPC Paint Application Guide shall be supplied by the manufacturer.

g. Cleanup: Upon completion of coating, the Contractor shall remove surplus materials, protective coverings and accumulated rubbish and thoroughly clean all surfaces and repair any over spray or other paint-related damage.

6. Testing

a. Spark Testing; All coated surfaces shall be spark tested for holes. The spark tester used shall provide 14,000 volts. If pinholes are found, the Contractor shall repair the coating as recommended by the manufacturer and retest. All testing and repair work shall be at the Contractor's expense.

a. Adhesion Testing: The Contractor shall perform an adhesion test after proper cure in accordance with ASTM D3359 to demonstrate that the specified field coatings adhere to the substrate. Test results showing an adhesion rating of 5A on immersed surfaces and 4A or better on all other surfaces shall be considered acceptable.

D. **DEFECT REPAIR**

1. The Contractor shall repair all defects in the coating system where directed by the Engineer.

2. Where unacceptable adhesion test results are obtained, the Contractor shall be responsible for removing and reapplying the specified coatings at no expense to the Owner.

E. **WARRANTY**

The coating applicator shall supply a minimum five-year warranty, for the coating that has been approved through the submittal process. The coating applicator shall also supply a warranty from the coating manufacturer addressed to the City. The warranty shall state, at a minimum, that the coating is applied in accordance with the manufacturer's instruction and that the coating will not fail for a period of five years. The definition of coating failure is that blistering, cracking, embrittlement or softening of the coating is starting to occur.

All structural rehabilitation work performed by the Contractor shall be guaranteed against faulty workmanship and/or materials for a period of 2 years after final acceptance of work.

F. **MEASUREMENT AND PAYMENT**

Payment for manhole coating shall be per square foot as measured from the invert to the ring & cover. The unit price shall include by-pass pumping and all materials necessary for internal coating of manholes specified on the plan sheets.

Pay Item: 626.1 Coat Manhole

630 Tapping Sleeves, Valves and Valve Boxes on Water Lines

630.3 GATE VALVES

630.3.1 General: REPLACE the fifth (5th) paragraph with the following:

All valves shall be designed for a minimum of 250 psi rated pressure unless otherwise noted.

REPLACE the thirteenth (13th) paragraph with the following:

Valves 20 inches and smaller may be furnished with flanged ends or mechanical joint ends, unless otherwise noted.

ADD the following:

A. Valves shall be resilient wedge gate valves, Waterous 2500 series, Clow, Mueller, or equal, suitable for use in line and in wet tapping water mains in conjunction with tapping sleeves. Gate valves shall be mechanical joint except where flange joints are specifically detailed in project plans or where required for tapping sleeves and hydrant installation.

B. Valve blocking shall be provided on all valves in accordance with COP Standard Detail 3-05P. No separate payment will be made for valve blocking and the cost shall be included in the water main unit price.

C. Valve boxes shall be in accordance with COP Standard Detail 3-15P.

D. Debris caps shall be installed on all valves within project limits according to MAG Standard Detail 392

and shall be color-coded according to COP Standard Detail 3-15P. Debris caps shall be SW Services DC600 or approved equal.

E. Retrofit Debris Caps on Valves: Debris caps shall be installed on all valves within project limits according to MAG Standard Detail 392 and shall be color-coded according to COP Standard Detail 3-15P. Debris caps shall be SW Services DC600 or approved equal.

F. The Contractor shall notify customers of scheduled water service disruption a minimum of 24 hours in advance of construction. Customers shall not be without water service nor shall the water main line be out of operation for a total time period greater than four (4) hours, inclusive of contract time period from issuance of Notice to Proceed to Final Acceptance by the Engineer.

630.3.2 Supplements Specifically Relating to Valve Size:

(C) Valves. 14 inches through 20 inches: REPLACE with the following:

(C) Valves 14 inches through 16 inches:

REPLACE the first paragraph with the following:

Valves shall be iron body resilient-seated gate valves in accordance with the latest revision of AWWA C-509 or AWWA C-515.

DELETE the third paragraph in its entirety.

(D) Valves 24 inches and larger: REPLACE with the following:

(D) Valves 18 inches and larger:

REPLACE the first paragraph with the following:

(C) Valves. 14 inches through 20 inches: REPLACE with the following:

(C) Valves. 14 inches through 16 inches:

REPLACE the first paragraph with the following:

Valves shall be iron body resilient-seated gate valves in accordance with the latest revision of AWWA C-515.

REPLACE the second paragraph with the following:

Valves shall be for operation in a horizontal position. The valve shall have bevel gears. The gears and stuffing box shall be enclosed in a watertight iron case, for operation in a buried location. The case shall be filled with grease at the factory.

630.4 TAPPING SLEEVES AND VALVES

ADD the following:

A. The City of Prescott Utility Operations shall be notified 48 hours in advance to schedule water main tap. If the Contractor is not ready for the tap at the scheduled time, the tap will be rescheduled. City crews will not remain on standby until the Contractor is ready for the tap. The rescheduled tap shall include a new 48 hour notification.

630.4.1 Tapping Sleeves and Valves: REPLACE the third paragraph with the following:

Once the tap has been installed, the Contractor shall not operate the valve.

ADD the following:

A. Debris caps shall be installed on tapping sleeve valve according to MAG Standard Detail 392 and shall be color-coded according to COP Standard Detail 3-15P. Debris caps shall be SW Services DC600 or approved equal.

630.4.3 Tapping and Associated Fees: ADD the following:

A. The Contractor shall be responsible for payment to the City Utility Operations for the quoted costs for the City Water Department to perform water main tap work. The water tap fees are as follows:

1" Tap	$100.00
2" Tap	$130.00
4" Tap	$240.00
6" Tap	$260.00
8" Tap	$325.00
10" Tap	$380.00
12" Tap	$435.00

B. The Contractor shall add the cost of this work to the unit price bid in the bidding schedule for tapping, sleeve, valve, box and cover. Tapping sleeves shall be in accordance with COP Standard Detail 3-05P and this Section.

630.5 Butterfly Valves:

(A) 16 inch and larger: REPLACE with the following:

(A) 18 inch and larger:

REPLACE (1) with the following:

Valve body shall be of cast iron or ductile iron with connecting ends one of or a combination of Flanged (Short Body) or mechanical joint.

DELETE (B) in its entirety.

630.6 AIR RELEASE, COMBINATION VALVES, AND BLOW OFF ASSEMBLY

ADD the following:

C. Air/vacuum release valves shall be in accordance with COP Standard Detail 3-17P.

D. Combination Air Valves

1. Air valves shall be standard combination style. Cast iron air valves shall comply with AWWA C-512 except as modified herein. Valves shall be of the size shown and shall have threaded or flanged ends to match piping. Bodies shall be of high-strength cast iron, conforming to ASTM A126 class B, or NSF 61 certified reinforced nylon. Floats of cast iron air valves shall be heavy stainless steel, suitable to withstand 1,000 psi external pressure. Seats of cast iron air valves shall be Buna-N. Other internal components of cast iron air valves shall be constructed of stainless steel, bronze, delrin, or cast iron as appropriate. Internal components for reinforced nylon valves shall be NSF 61 certified nylon, polypropylene, EPDM or NBR 70. Inlet and outlet ports for large orifice valves shall be baffled to prevent the action of high volume airflows from interfering with valve operations. Interior and exterior carbon steel surfaces shall be epoxy coated. Valves shall be designed for a minimum of 300 psi water working pressure, unless

otherwise shown.

2. Internal protective coatings shall be provided in accordance with AWWA C-550.

a. Liquid epoxy lining and coating materials shall be listed in the NSF Listing for Drinking Water Additives, Standard 61, certified for use in contact with potable water.

b. The minimum dry film thickness for epoxy linings shall be 0.203 mm (0.008-inch or 8 mils). Liquid epoxy lining shall be applied in two (2) coats in accordance with AWWA C-210.

3. Combination air valves shall be in accordance with COP Standard. Detail. 3-17P, unless shown otherwise. They shall have both large and small orifices in a single body. The large orifice shall serve to vent large quantities of air during filling operations and shall automatically open to relieve vacuum conditions. The small orifice shall vent small quantities of air under full line pressure that may become entrained in the system and collect at high points. Valves shall be APCO Series 140, Val-Matic Corp. Series 200, or equivalent

ADD the following Section:

630.6.1 Blow Off Installation:

A. Blow off installation shall be in accordance with COP Standard Detail 3-18P. Contractor shall be required to provide Mega-Lug restraint for all joints for a distance specified per MAG Standard Detail 303.

630.8 Measurement: REPLACE with the following:

Measurement will be by the unit each of the various kinds and sizes of valves, manholes, vaults, or tapping sleeves and valves, including valve boxes and covers, retrofit debris covers, air release valve assemblies, combination valve assemblies, and blow off assemblies.

630.9 Payment: ADD the following:

Payment for valves, box and cover shall be per each at the unit bid price shown in the bidding schedule. Valves on tapping sleeves and hydrant installations shall be included in the appropriate bid item in the bidding schedule.

Payment for retrofit debris cap shall be per each installed complete and in place.

Payment for tapping sleeves shall be at the unit price bid in the bidding schedule and include the tapping fee, tapping sleeve, valve, box and cover, and all appurtenant fittings for complete assembly.

Payment for air release valve installation shall be at the unit price bid in the bidding schedule and shall include all materials and appurtenant fittings at noted for a complete installation.

Payment for combination air valve assembly shall be at the unit price bid in the bidding schedule and shall include all materials and appurtenant fittings at noted for a complete installation.

Payment for blow off installation shall be at the unit price bid in the bidding schedule and shall include all materials and appurtenant fittings as noted for complete installation. No extra payment shall be made for Mega-Lug restraint.

Pay Item: 630.3a Gate Valve, Box, & Cover

Pay Item: 630.3b Retrofit Debris Cap

Pay Item: 630.4 Tapping Sleeve, Valve, Box, and Cover

Pay Item: 630.6a Air Release Valve Assembly

Pay Item: 630.6b Combination Valve Assembly

Pay Item: 630.6.1 Blow-Off Assembly

ADD Section 650 as follows:

650 ABANDONMENT AND REMOVAL OF WATER MAIN

650.1 Abandonment of Water Main:

A. Abandonment of existing water main shall not commence until hydrostatic and disinfection test results for the new main have been accepted by the Engineer. The Contractor shall contact the Engineer a minimum of 48 hours in advance of abandonment activities to schedule City water crews to coordinate valve operation. Water customers affected by water service disruption due to water main abandonment shall be notified by written flyer delivered by the Contractor a minimum of 24 hours in advance of scheduled water service disruption. Scheduled water service disruptions are limited to a maximum of 4 hours.

B. Abandonment of existing main shall include the removal of all valves, hydrants, and appurtenances within the reach to be abandoned. All valves and hydrants to be abandoned shall be salvaged to the City unless otherwise noted on the plans or special provisions. All salvaged items shall be delivered to the City of Prescott Water Operations, 1481 Sundog Ranch Road and placed as directed by the Engineer. Removed materials not identified to be salvaged shall become the property of the Contractor and properly disposed of. Removed or salvaged materials shall not be used in new main installation.

   At all locations indicated on the plans, a minimum of four (4) feet of water main shall be removed capped and the appropriate thrust restraint installed.

   Existing valves to be abandoned shall include removing the valve, valve box, and cover in its entirety. Abandonment of appurtenances located in any structure (manhole, vault, etc.) shall include the complete removal and proper disposal of the appurtenance and the structure.

   Abandonment of valves, hydrants, and appurtenances shall include the installation of the requisite number of mechanical joint caps as necessary to seal all pipe remaining in place.

C. Restoration for water main abandonment shall include excavation, backfilling, compaction and re-surfacing in accordance with Section 601.

D. Pavement matching and surface replacement shall be incidental to water main abandonment.

650.2 Removal of Water Main:

A. Removal of water main shall not commence prior to authorization from the Engineer.

B. Water main removal shall include the complete removal of all existing water main, valves, hydrants, structures, and appurtenances within the reach as indicated on the plans. All valves and hydrants to be removed shall be salvaged to the City unless otherwise noted on the plans or special provisions. All salvaged items shall be delivered to the City of Prescott Water Operations, 1481 Sundog Ranch Road and placed as directed by the Engineer. Materials not otherwise identified to be salvaged shall become the property of the Contractor and properly disposed of. Removed or salvaged materials shall not be used in new main installation.

C. Removal of water main shall include excavation, backfilling, compaction, disposal and salvage in accordance with Section 601.

D. Pavement matching and surface replacement shall be measured and paid accordance with Section

336. Any other restoration shall be considered incidental.

650.3 Measurement:

Measurement for abandonment of water main and laterals shall be by the lineal foot of pipe abandoned, measured horizontally through valves and fittings. Hydrants, valves, fittings, vaults, services, and other appurtenances shall be considered incidental to water main abandonment.

Measurement for removal of water mains and laterals shall be by the lineal foot of pipe removed, measured horizontally through valves and fittings. Hydrants, valves, fittings, vaults, services, and other appurtenances shall be considered incidental to water main abandonment.

650.4 Payment:

Payment for water main abandonment shall be at the appropriate unit bid price and shall include all work and appurtenant fittings necessary for complete abandonment. Pavement matching and surface replacement shall be incidental to water main abandonment.

Payment for water main removal shall be at the appropriate unit bid price and shall include all work and appurtenant fittings necessary for complete removal. Pavement matching and surface replacement shall be measured and paid accordance with Section 336. Any other restoration shall be considered incidental.

Pay Item: 650.1 Water Main Abandonment

Pay Item: 650.2 Water Main Removal

ADD Section 651 as follows:

651 ABANDONMENT AND REMOVAL OF SANITARY SEWER

651.1 Abandonment of Sanitary Sewer:

A. Abandonment of sanitary sewer shall not occur until all existing sanitary sewer services have been transferred to another main or lateral, and abandonment is approved by the Engineer.

B. Abandonment of sanitary sewer shall include gravity and/or force mains, manholes, vaults, wet wells, and other appurtenances within the reach noted on the plans to be abandoned.

C. Manhole frames, covers, vault access hatches, and clean-out frame & covers shall be salvaged to the City unless otherwise noted on the plans or special provisions. All salvaged items shall be delivered to the City of Prescott Wastewater Collections, 1505 Sundog Ranch Road and placed as directed by the Engineer. Materials not otherwise identified to be salvaged shall become the property of the Contractor and properly disposed of. Removed or salvaged materials shall not be used in new sewer installation.

D. Restoration for sanitary sewer abandonment shall include all excavation, backfilling, compaction, and resurfacing in accordance with Section 601.

651.1.1 Sanitary Sewer Mains:

A. Abandonment of sanitary sewer mains shall include all gravity mains, laterals, and force mains, and shall be accomplished by pipe bursting or grout filling as indicated on the plans.

1. Pipe bursting shall be performed using industry standard methods and equipment.

   A pipe bursting plan including equipment used, means and methods shall be submitted and approved in accordance with Section 105.2 prior to beginning bursting operations.

   Valves shall be removed and disposed of prior to pipe bursting, and shall become property of

the contractor. All valves shall be properly disposed of in accordance with these specifications.

2. Grouting shall be accomplished following industry standard methods, using a cement based grout to fill the void of the existing sanitary sewer main. The grouting material must have a minimum compressive strength of 100 PSI and shall have flow characteristics appropriate for filling a sanitary sewer.

   Injection of the grout material shall be done with sufficient pressure and injection locations to fill the existing sanitary sewer line. The method shall adequately provide for the removal and legal disposal of existing sewage in the lines and any pipe materials removed, and release of air from the system to facilitate proper abandonment.

   A grouting plan including equipment used injection locations, grout mix design, and means and methods shall be submitted and approved in accordance with Section 105.2 prior to beginning grouting operations.

651.1.2 Manholes, Vaults, and Wet Wells:

A. Abandonment of manholes, vaults, wet wells and other structural appurtenances shall include the complete removal of each structure within the reach to be abandoned as indicated on the plans.

B. All items removed and not salvaged shall become property of the contractor and properly disposed of in accordance with these specifications.

C. Backfilling after removal shall be in accordance with Section 601.

D. Pavement matching and surface replacement shall be incidental to sewer abandonment.

651.2 Removal of Sanitary Sewer:

A. Removal of sanitary sewer shall not commence prior to authorization from the Engineer.

B. Removal of sanitary sewer shall include the complete removal of gravity and/or force mains, manholes, vaults, wet wells, and other appurtenances within the reach noted on the plans to be removed.

   Existing sanitary sewer that is removed coincident with the installation of new sanitary sewer shall be considered incidental to the installation and shall not be measured or paid for under this section.

C. Manhole frames, covers, vault access hatches, and clean-out frame & covers shall be salvaged to the City unless otherwise noted on the plans or special provisions. All salvaged items shall be delivered to the City of Prescott Wastewater collections, 1505 Sundog Ranch Road and placed as directed by the Engineer. Materials not otherwise identified to be salvaged shall become the property of the Contractor and properly disposed of. Removed or salvaged materials shall not be used in new sewer installation.

D. Removal of sewer main, laterals, or force main that tie into an existing manhole that is to remain in service shall include complete removal of the penetrating pipe and grouting the hole with lean, non-shrink grout. A water stop shall be used to ensure the integrity of the manhole.

   The water stop proposed shall be submitted for review and approval prior to removal activities in accordance with Section 105.2

E. Removal of sanitary sewer shall include excavation, backfilling and compaction in accordance with Section 601. Disposal, salvage, and bypass pumping shall be considered incidental to sewer removal.

F. Pavement matching and surface replacement shall be measured and paid in accordance with Section 336. Any other restoration shall be considered incidental.

651.3 Measurement:

Measurement for abandonment of sewer main, laterals, and force main shall be by the lineal foot of pipe abandoned, measured horizontally through manholes, vaults, valves, and fittings. Valves, fittings, services, cleanouts, and other appurtenances shall be considered incidental to sewer abandonment.

Abandonment of manholes and wet wells shall be the number of each abandoned. Vaults shall be considered incidental to sewer abandonment unless otherwise noted in the special provisions.

Measurement for removal of sewer main, laterals, and force main shall be by the lineal foot of pipe abandoned, measured horizontally through manholes, vaults, valves, and fittings. Valves, fittings, services, cleanouts, and other appurtenances shall be considered incidental to sewer abandonment.

Measurement for manholes and wet wells shall be the number of each removed. Vaults shall be considered incidental to sewer abandonment unless otherwise noted in the special provisions.

651.4 Payment:

Payment for abandoning sewer mains, laterals, and force main shall be made at the contract unit price. Said price shall be full compensation for furnishing all materials, labor, equipment, tools and incidentals necessary to complete the work. Pavement matching and surface replacement shall be incidental to sewer abandonment.

Payment for abandoning manholes and wet wells shall be made at the contract unit price. Said price shall be full compensation for furnishing all materials, labor, equipment, tools and incidentals necessary to complete the work. Pavement matching and surface replacement shall be incidental to sewer abandonment.

Payment for removing sanitary sewer shall be made at the contract unit price. Said price shall be full compensation for furnishing all materials, labor, equipment, tools and incidentals necessary to complete the work. Pavement matching and surface replacement shall be measured and paid in accordance with Section 336. Any other restoration shall be considered incidental.

Payment for removing manholes and wet wells shall be made at the contract unit price. Said price shall be full compensation for furnishing all materials, labor, equipment, tools and incidentals necessary to complete the work. Pavement matching and surface replacement shall be measured and paid in accordance with Section 336. Any other restoration shall be considered incidental.

Pay Item: 651.1 Abandonment of Sanitary Sewer

Pay Item: 651.1a Abandonment of Sanitary Manhole

Pay Item: 651.2 Removal of Sanitary Sewer

Pay Item: 651.2a Removal of Sanitary Manhole

701 AGGREGATE

701.4 Reclaimed Concrete Material (RCM)

REMOVE in its entirety and REPLACE with the following:

Use of Reclaimed Concrete Material (RCM) is not allowed.

701.5 Reclaimed Asphalt Pavement (RAP):

REMOVE in its entirety.

710 ASPHALT CONCRETE

SECTION 710.2.1 Asphalt Binder: shall be deleted and replaced as follows:

a. The asphalt binder shall be a Performance Grade (PG) PG 64-22 Asphalt conforming to the requirements of AASHTO M 320-09 Performance-Graded Asphalt Binder. The binder grade shall be as specified in the contract documents or as directed by the Engineer.

b. The Engineer may review a request by the Contractor to change from a PG 64-22 binder grade to a PG 64-16 grade. The owner may require the Contractor to provide supporting justification and/or data for changing the grade of binder from PG 64-22 to PG 64-16.

SECTION 710.3.2 Mix Design Criteria: add the following:

a. The intent of this supplement is to use only 1/2 inch or 3/4 inch Marshall or Gyratory Mix Designs within the specification unless specifically called out in the project specifications.

b. The asphalt mix design shall be for high traffic volume, unless otherwise specified.

SECTION 710.3.2.1 Marshall Mix Design: make the following change:

a. In Table 710-3 change the Tensile Strength Ratio minimum percent requirement from 65 to 75. A tensile strength ratio of 75 percent may require more than one percent mineral admixture.

725 PORTLAND CEMENT CONCRETE

725.1 General: ADD the following:

All Portland cement concrete placed under this contract shall be Class AA with a maximum water/cement ratio of 0.45.

Adverse Weather Concreting

A. Hot Weather Concreting:

Hot weather is defined as any combination of high ambient temperature, low relative humidity, and wind velocity which would tend to impair the quality of fresh concrete. These effects become more pronounced as wind velocity increases. Since last minute improvisations are rarely successful, preplanning and coordination of all phases of the work are required to minimize these adverse effects.

Place concrete according to recommendations in ACI 305R and as follows, when hot-weather conditions exist:

1. Cool ingredients before mixing to maintain concrete temperature below 90 deg F at time of placement. Chilled mixing water or chopped ice may be used to control temperature, provided water equivalent of ice is calculated to total amount of mixing water. Using liquid nitrogen to cool concrete is CONTRACTOR's option.

2. Cover steel reinforcement with water-soaked burlap so steel temperature will not exceed ambient air temperature immediately before embedding in concrete.

3. Fog-spray forms, steel reinforcement, and subgrade just before placing concrete. Keep subgrade moisture uniform without standing water, soft spots, or dry areas.

As an absolute minimum, the Contractor shall insure that the following measures are taken:

1. An ample supply of water, hoses, and fog nozzles are available at the site.

2. Spare vibrators are on hand in the ratio of one spare vibrator for each three in use.

3. Preplanning has been accomplished to insure prompt placement, consolidation, finishing, and curing

of the concrete.

4. Concrete temperature on arrival should be approximately 60°F and in any event shall not exceed 90°F. The use of cold water and ice is recommended.

5. The subgrade is moist, but free of standing water.

6. Fog spray is utilized to cool the forms and steel. Under extreme conditions of high ambient temperature, exposure to the direct rays of the sun, low relative humidity, and wind, even strict adherence to these measures may not produce the quality desired and it may be necessary to restrict concrete placement to early morning only. If this decision is made, then particular attention must be directed to the curing process since the concrete will be exposed to severe thermal stresses due to temperature variation; heat of hydration plus midday sun radiation versus nighttime cooling.

B. Cold Weather Concreting:

Comply with ACI 306 and as follows. Protect concrete work from physical damage or reduced strength that could be caused by frost, freezing actions, or low temperatures.

1. When air temperature has fallen to or is expected to fall below 40 deg F, uniformly heat water and aggregates before mixing to obtain a concrete mixture temperature of not less than 50 deg F and not more than 80 deg F at point of placement.

2. Do not use frozen materials or materials containing ice or snow. Do not place concrete on frozen subgrade or on subgrade containing frozen materials.

3. Do not use calcium chloride, salt, or other materials containing antifreeze agents or chemical accelerators, unless otherwise specified and approved in mix designs.

C. Wet Weather Concreting: Placing of concrete shall be discontinued when the quantity of rainfall is such as to cause a flow or wash to the surface. Any concrete already placed and partially cured shall be covered to prevent dimpling. A construction joint will be installed prior to shut down.

D. Replacement of Damaged or Defective Concrete: Upon written notice from the Engineer, all concrete which has been damaged or is defective, shall be replaced by the Contractor at no cost to the Contracting Agency.

E. References:

(1) ACI-305 Hot Weather Concreting

(2) ACI-306 Cold Weather Concreting

(3) ACI-308 Recommended Practices for Curing Concrete

F. No separate payment shall be made for adverse weather concreting. The work shall be considered incidental and included in the unit price bid for construction or installation of the appropriate contract pay item.

725.5 Admixtures and Additives: REPLACE the third (3rd) paragraph in its entirety with the following:

Air entraining admixtures incorporated into the approved concrete mix design shall meet the requirements of ASTM C260. All Portland cement concrete shall contain 6%, plus or minus 1%, entrained air of evenly dispersed air bubbles at the time of placement. The air-entraining agent shall contain no chlorides. The air-entraining agent shall be added to the batch in a portion of the mixing water. The solution shall be batched by means of a mechanical batcher capable of accurate measurement. Air entrainment in the concrete shall be tested in accordance with AASHTO T-152. Air entrainment shall be tested at time of sampling in accordance with ASTM C143 and C231 respectively. The cost of this testing shall be the responsibility of the

Contractor.

725.8 Tests and Test Methods:

725.8.1 Field Sampling and Tests: REPLACE the fourth (4th) paragraph in its entirety with the following:

The slump of Portland cement concrete shall be tested in accordance with the requirements of AASHTO T119, ASTM C143 and ASTM C231 respectively. Concrete that does not meet the specification requirements as to slump shall not be used, but shall be removed from the job at no cost to the CITY. Slump tests shall be taken in the field by a representative of the Contractor's quality control firm. The cost of this testing shall be the responsibility of the Contractor.

725.8.2 Concrete Cylinder Test: MODIFY with the following:

Concrete cylindrical specimens for compression tests shall be taken in the field by a representative of the Contractor's quality control firm in accordance with AASHTO T141 and T-23. These samples will be tested for compressive strength in accordance to AASHTO T22. Concrete samples will be taken in accordance with MAG 725.8.2 and 725.8.3 except as noted hereinafter. One set of not less than four (4) cylinders per fifty (50) cubic yards or ½ days pour shall be prepared and retained to verify compressive strength of the mixture. One (1) cylinder shall be tested at seven (7) days and two (2) at twenty-eight (28) days. The fourth (4th) cylinder shall be retained for up to sixty (60) days. If the 28-day test does not meet the minimum strength requirement, cores shall be taken as provided herein and the cost of such will be the responsibility of the Contractor. Acceptance shall be based on minimum 28-day strength requirements. The cost of testing shall be the responsibility of the Contractor.

City of Prescott
Autumn Breeze Street Improvement Project
CIP#15-027

Project Special Provisions

April, 2016

Project Owner:
City of Prescott
433 N. Virginia Street
Prescott, Arizona 86302
(928)777-1130

Project Engineer:

REGISTERED PROFESSIONAL ENGINEER (CIVIL)
CERTIFICATE NO.
26962
SANDRA D.
PHILLIPS
Date Signed 04-15-16
ARIZONA, U.S.A.

EXPIRES 3/31/2017

WOODSON
ENGINEERING & SURVEYING, INC.
124 N Elden St, Flagstaff, AZ 86001
(928) 774-4636 | Fax (928) 774-4646
www.woodsoneng.com
WES Project No. 115887

SPECIAL PROVISIONS 2
100.1 SCOPE OF WORK 2
100.4 PUBLIC RELATIONS 2
107.15 STORM WATER POLLUTION PREVENTION PLAN (SWPPP) 2
107.16 ROCK CHECK DAM 2
107.17 WATTLES 3
215 EARTHWORK FOR OPEN CHANNELS 3
215.1 DITCH FORMING 3
220.1 DUMPED RIP RAP 3
310 PLACEMENT OF AGGREGATE BASE COURSE 3
321 ASPHALT CONCRETE PAVEMENT 3
350 REMOVAL OF EXISTING IMPROVEMENTS 4
350.4 REMOVE CONCRETE CATCH BASIN 4
505.1.1C CONCRETE CATCH BASIN 4
505.1.1E CONCRETE RETAINING WALL 4
601.2.11 ROCK EXCAVATION FOR DRAINAGE CONSTRUCTION 4

NOTE:

In case of conflicts between the referenced specifications, the following order of precedence shall govern:

1. Addenda;
2. These Special Provisions;
3. The COP General Conditions;
4. City of Prescott (COP) Supplement to the Maricopa Association of Governments (MAG) Uniform Standard Specifications and Details for Public Works Construction, Technical Specifications;
5. Maricopa Association of Governments (MAG) Uniform Standard Specifications and Details for Public Works Construction;
6. Project Plans.

EXPIRES 3/31/2017

SPECIAL PROVISIONS

100.1 SCOPE OF WORK

A. **Intent of Plans and Specifications:**

1. The intent of the Specifications is to prescribe a complete work for the Autumn Breeze Street Improvement Project which the Contractor shall perform in a manner acceptable to the City of Prescott and in full compliance with the terms of the Contract.

2. Unless otherwise specified in the Special Conditions, the Contractor shall furnish all materials, labor, tools, equipment, water, light, power, transportation, superintendence, temporary construction of every nature, and incidentals, including, but not limited to, dust and traffic control measures, and to perform all work involved in executing the contract in a satisfactory and workmanlike manner within the specified time.

3. The Engineer shall be that person or his designees employed by or contracted by the City Of Prescott responsible for all aspects of the project and with the authority to make revisions to and approve changes to the plans or specifications.

B. **Project Description and Location:**

1. The Autumn Breeze Street Improvement Project scope shall generally include installing a valley gutter, curb cut, grading a drainage ditch and adding inlet wings to the existing catch basin. This project is located within the jurisdiction of the City of Prescott (City).

C. **Time of Completion:**

1. The Contractor shall commence the work under this contract on or before the tenth (10th) calendar day after receiving written Notice to Proceed from the Owner. The Contractor shall fully complete all work within ***30*** calendar days, in accordance with the date set forth in the Notice to Proceed. The Contractor shall at all times during the continuance of the Contract prosecute the work with such work force and equipment as is sufficient to complete the project within the time specified.

100.4 PUBLIC RELATIONS

City of Prescott Technical Specification is modified to exclude this as a paid item on this project.

107.15 STORM WATER POLLUTION PREVENTION PLAN (SWPPP)

City of Prescott Technical Specification is modified as follows:

This project is ***not*** subject to the Arizona Pollutant Discharge Elimination System (AZPDES) stormwater requirements for construction sites under the Environmental Protection Agency (EPA) delegation to the Arizona Department of Environmental Quality (ADEQ) for the Construction General Permit for Arizona as the disturbed area is under one (1) acre.

107.16 ROCK CHECK DAM

The work under this item shall consist of furnishing all materials and constructing small rock check dams constructed across the drainage ditch in accordance with the details shown on the plans and per the requirements of MAG Specifications Section 220 and Section 703, excluding the filter fabric material requirement. Measurement and payment shall be per Rock Check Dam complete and in place. No separate payment shall be made for excavation or placement.

Pay Item: 107.16 Rock Check Dam D50 = 8 inches (EA)

107.17 WATTLES

The work under this item shall consist of furnishing all materials, equipment, labor, ground preparation and installing straw wattles across the roughened finished grade slope surface in accordance with the details shown on the plans. Locate sediment wattles as indicated on plans or as directed by the Engineer. Sediment wattles shall be in continuous contact with trench bottom and sides. Straw wattles shall consist of synthetic netting engineered for high water flow that is filled with 100% weed free straw matrix and approximately 1.7 pounds per linear foot. Measurement and payment shall be per linear foot of wattle complete and in place. No separate payment shall be made for excavation, ground preparation or placement.

Pay Item: 107.17 Wattles (LF)

215 EARTHWORK FOR OPEN CHANNELS

Work under this section shall consist of clearing, stripping, excavation, fill, backfill, grading and disposal of excavated and removed material in accordance with the details shown on the plans and per the requirements of MAG Specifications Section 215. **Measurement and payment shall be per cubic yard of earth moved, measured from existing ground elevation to finished grade, completed and in place.**

Pay Item: 215 Earthwork for Open Channel (CY)

215.1 DITCH FORMING

Work under this section shall consist of construction of the drainage swale according with the details shown on the plans and per the requirements of MAG Specifications Section 215. **Measurement and payment shall be per linear foot completed and in place.**

Pay Item: 215.1 Drainage Swale (LF)

220.1 DUMPED RIP RAP

The work under this item shall consist of furnishing all materials and constructing dumped rip rap in accordance with the details shown on the plans and per the requirements of MAG Specifications Section 220 and 703, excluding the filter fabric material requirement. **Measurement and payment shall be per cubic yard complete and in place. No separate measurement shall be made for excavation, or placement.**

Pay Item: 220.1 Dumped Rip Rap D50 = 8 inches (CY)

310 PLACEMENT OF AGGREGATE BASE COURSE

Paragraph shall be altered to read: "Use of Reclaimed Asphalt Pavement (RAP) aggregates or "millings" *will not be allowed* "

Aggregate Base is required under all concrete flat work and concrete structures. Cost is incidental to the line item unless otherwise specified.

Measurement and payment shall be per cubic yard complete, compacted and in place.

Pay Item: 310 Placement of Aggregate Base Course (Full Depth) (CY)

321 ASPHALT CONCRETE PAVEMENT

The work under this item shall consist of furnishing all materials and constructing asphalt concrete pavement in accordance with the details shown on the plans and per the requirements of MAG Specifications Section 231 and mix design shall be C ¾" Marshall Mix requirements.

Paragraph shall be altered to read: "Use of Reclaimed Asphalt Pavement (RAP) aggregates or "millings" *will not be allowed* "

Measurement and payment shall be per square yard complete, compacted and in place.

Pay Item: 321.13 Asphalt Concrete Pavement (Full Depth) (SY)

350 REMOVAL OF EXISTING IMPROVEMENTS

Paragraph shall be altered to read: "All existing miscellaneous concrete shall be removed to a depth of at least ***two*** feet below finished subgrade elevation unless otherwise noted on the project plans or special provisions."

This sentence is removed and not applicable to this project: "The floors of concrete basements, pits and structures that are located within the right-of-way shall be completely removed."

No item shall be removed if designated by the Public Works Director to remain in place. Such items shall be protected from damage.

Pay Item: 350.1 Remove Asphaltic Concrete Pavement (Full Depth) (SY)

Pay Item: 350.2 Remove Concrete Sidewalk (SF)

Pay Item: 350.3 Remove Concrete Curb & Gutter (LF)

350.4 REMOVE CONCRETE CATCH BASIN

Work under this item shall include protecting the existing curb in place, and existing corrugated metal pipe conveying flows from the catch basin. Payment for removal of concrete catch basin shall include the cost of saw cutting, excavation, removal, hauling and disposal. Payment shall be made on a lump sum basis for removal of existing catch basin.

Pay Item: 350.4 Remove Concrete Catch Basin (LS)

505.1.1C CONCRETE CATCH BASIN

Work under this item shall be in accordance with MAG Specifications Section 505, 725, 726 and 727; MAG Standard Details 533-1 through 4, and the project drawings. All concrete shall be Class "A" 3,000 psi. Subgrade and base material under the structure shall be compacted to not less than 95% of the maximum dry density as determined by AASHTO T-99. No additional payment will be made for aggregate base materials required under concrete structures. The base material shall be considered incidental to the construction of this item and provided for in the unit price for the work. Payment shall be made per each catch basin installed complete in place in accordance with the respective detail, to include wings per plan and grates.

Pay Item: 505.1.1C Concrete Catch Basin (EA)

505.1.1E CONCRETE RETAINING WALL

Work under this item shall be in accordance with detail on the project drawings. All concrete and block shall be as indicated on the project drawings. Subgrade under the structure shall be compacted to not less than 95% of the maximum dry density as determined by AASHTO T-99. No additional payment will be made for compaction of subgrade under concrete structures. Measurement and payment under this item shall be per linear foot, to the nearest half foot, measured along the top of the wall installed complete in place in accordance with the respective detail.

505.1.1.E Concrete Retaining Wall – (LF)

601.2.11 ROCK EXCAVATION FOR DRAINAGE CONSTRUCTION

Rock excavation within drainage ditch shall be measured by the actual depth from top of rock to bottom of rock, or to finished grade, whichever depth occurs first.

Payment for rock excavation shall be at the unit price bid per cubic yard which shall include the cost of blasting, excavation, removal, hauling and disposal.

Pay Item: 601.2.11 Rock Excavation for Drainage Construction (CY)

CITY OF PRESCOTT

PUBLIC WORKS DEPARTMENT

PROJECT 15-027

AUTUMN BREEZE STREET IMPROVEMENT

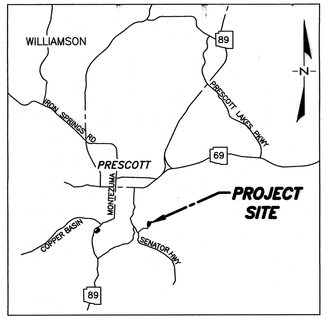

VICINITY MAP
NOT TO SCALE

MAYOR
HARRY B. OBERG

CITY COUNCIL
JIM LAMERSON
STEVE BLAIR
JEAN WILCOX
BILLIE ORR
STEVE SISCHKA
GREG LAZZELL

SHEET INDEX

SHEET	DESCRIPTION
1	COVER SHEET
2	GENERAL NOTES & LEGEND
3	DRAINAGE PLANS
4	DETAILS
5	SEDIMENT WATTLE DETAIL

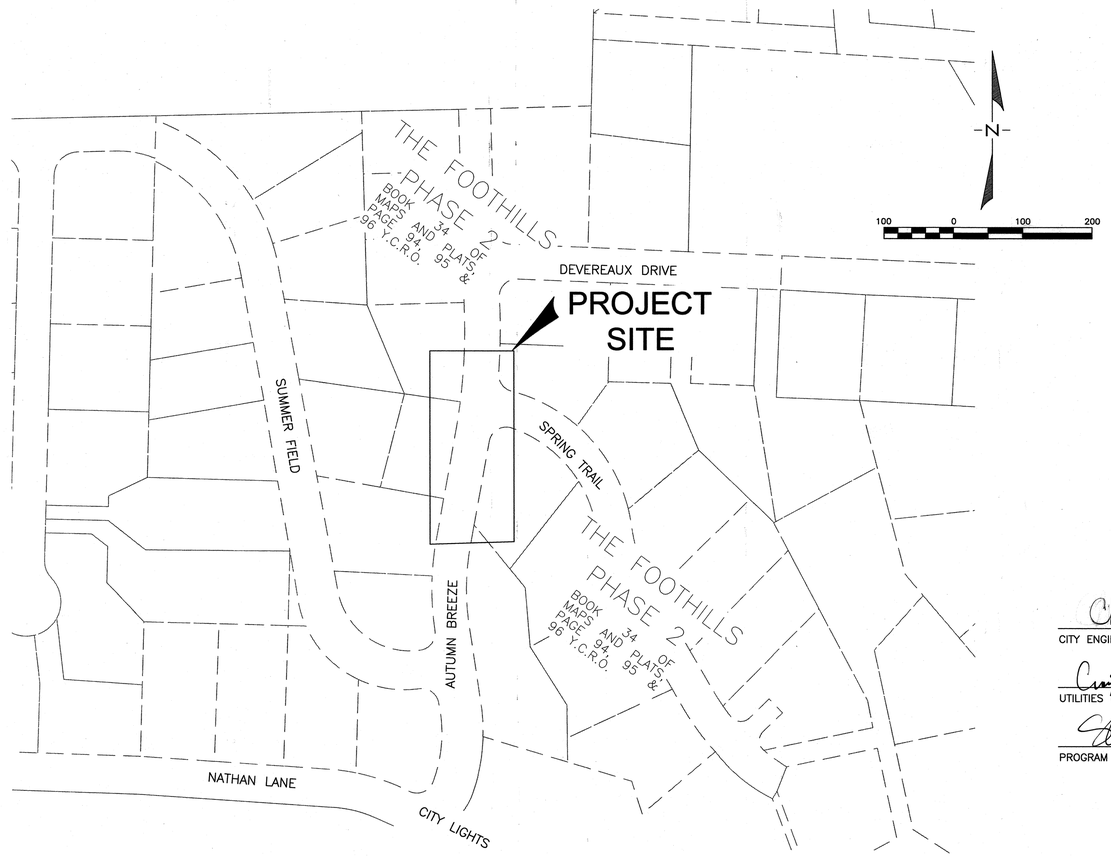

SITE MAP
SCALE: 1" = 100'

AS BUILT CERTIFICATION

I HEREBY CERTIFY, TO THE BEST OF MY KNOWLEDGE, INFORMATION AND BELIEF, THAT THIS PROJECT HAS BEEN COMPLETED IN SUBSTANTIAL CONFORMANCE WITH THE APPROVED PLANS, SPECIFICATIONS AND REFERENCED STANDARDS, EXCEPT AS SHOWN HEREON; THAT THESE AS-BUILT PLANS REFLECT THE POSITION OF CONSTRUCTED IMPROVEMENTS BASED ON FIELD MEASUREMENTS; AND THE MATERIALS USED IN CONJUNCTION ARE AS SHOWN BASED ON FIELD OBSERVATION AND TEST RESULTS.

THIS CERTIFICATION DOES NOT WARRANT MATERIALS, WORKMANSHIP, METHODS OF CONSTRUCTION , OR OTHER ITEMS AFFECTING THE WARRANTY OF THIS PROJECT, TO THE CITY OF PRESCOTT. USERS OF THIS INFORMATION ARE ADVISED TO OBTAIN INDEPENDENT VERIFICATION OF ACTUAL CONDITIONS.

REGISTERED PROFESSIONAL ENGINEER (CIVIL) DATE

UTILITY INFORMATION

COMPANY	CONTACT	TELEPHONE
ARIZONA PUBLIC SERVICE CO. 6672 CORSAIR PRESCOTT, ARIZONA 86301	ERIC WIKMAN	(928)443-6660
CENTURYLINK 1445 MASONRY WAY PRESCOTT, ARIZONA 86301	KAREN PRUTZMAN	(928)776-2513
UNISOURCE GAS CO. 6405 WILKINSON DRIVE PRESCOTT, ARIZONA 86301	JEFF BROWN	(928)771-7227
CABLE ONE 3801 TOWER ROAD PRESCOTT, ARIZONA 86301	JOHNNY CEDILLO	(928)443-3348
CIT OF PRESCOTT WATER AND SEWER P.O. BOX 2059 PRESCOTT, ARIZONA 86301	CRAIG DOTSETH	(928)777-1130
BLUE STAKE CALL TWO WORKING DAYS BEFORE YOU DIG 1-800-STAKE-IT outside Maricopa County	Call at least two full working days before you begin excavation. ARIZONA 811 Arizona Blue Stake, Inc. Dial 8-1-1 or 1-800-STAKE-IT (782-5348) In Maricopa County: (602) 263-1100	

NOTE: CONTRACTOR TO VERIFY LOCATION AND ELEVATION OF EXISTING UTILITIES PRIOR TO CONSTRUCTION. CONTRACTOR IS RESPONSIBLE FOR COORDINATING ANY NECESSARY UTILITY RELOCATION WITH THE APPLICABLE UTILITY.

BASIS OF BEARING

SURVEY CONTROL IS THE CITY OF PRESCOTT SURVEY DATUM, ALSO BEING ARIZONA STATE PLANE ZONE, ARIZONA CENTRAL 0202, NAD 83, NAVD 88 USING GEOID MODEL GEOID99 (CONUS), CITY OF PRESCOTT – CONVERSION FROM STATE PLANE:

NORTHING; (STATE PLANE X 1.000329975) – 701,456.0090

EASTING; (STATE PLANE X 1.000329975) + 69,457.2499

STATE PLANE CONVERSION FROM CITY OF PRESCOTT NORTHING: (CITY OF PRESCOTT + 701,456.0090) X 0.999670134, EASTING: (CITY OF PRESCOTT – 69,457.2499) X 0.999670134

APPROVED BY

Charles Anthony — 4-21-16
CITY ENGINEER — DATE

Craig Dotseth — 4-21-16
UTILITIES MANAGER — DATE

Sally — 4-21-16
PROGRAM DEVELOPMENT MANAGER — DATE

PROJECT BENCH MARK:
DATUM: NAVD-88
CITY OF PRESCOTT GRID COORDINATE SYSTEM

SPECIAL NOTE:
THE CITY OF PRESCOTT STANDARD DETAILS AND SPECIFICATIONS MEET MINIMUM DESIGN REQUIREMENTS OF THE EQUIVALENT MAG SPECIFICATIONS AND STANDARD DETAILS.

APPROVED TRAFFIC CONTROL PLAN AND R.O.W. PERMIT MUST BE OBTAINED FROM PUBLIC WORKS PRIOR TO BEGINNING WORK IN THE R.O.W.

CITY OF PRESCOTT PUBLIC WORKS IS RESPONSIBLE FOR INSPECTION OF IMPROVEMENTS IN THE R.O.W. AND DESIGNATED PUBLIC UTILITY EASEMENTS ONLY. ALL OTHER IMPROVEMENTS (ON-SITE) SHALL BE INDEPENDENTLY INSPECTED.

CITY OF PRESCOTT
Everybody's Hometown

Call at least two full working days before you begin excavation. ARIZONA 811 Arizona Blue Stake, Inc. Dial 8-1-1 or 1-800-STAKE-IT (782-5348) In Maricopa County: (602) 263-1100

DWG. NO. 1 | DATE 04/15/16 | SHEET NO. 1 OF 5

CITY OF PRESCOTT PUBLIC WORKS

COVER SHEET
AUTUMN BREEZE
STREET IMPROVEMENT

WOODSON
ENGINEERING AND SURVEYING, INC.
124 N. ELDEN ST.
FLAGSTAFF, AZ 86001
PHONE: (928) 774-4636 FAX: (928) 774-4646

PREPARED BY: AB | CHECKED BY: SDP | FOR: COP

REGISTERED PROFESSIONAL ENGINEER (CIVIL) CERTIFICATE NO. 36962 SAMUEL D. PHILLIPS ARIZONA U.S.A. — EXPIRES 3/31/2017

NOTE:
THE PRIVATE ENGINEER SIGNING THESE PLANS IS RESPONSIBLE FOR ASSURING THE ACCURACY AND ADEQUACY OF THE DESIGN HEREON, AND FOR ERRORS AND OMISSIONS ARISING AFTER CITY APPROVAL OR DURING CONSTRUCTION. THE PRIVATE ENGINEER SHALL BE RESPONSIBLE FOR REVISING AN ACCEPTABLE SOLUTION AND REVISING THE PLANS FOR APPROVAL BY THE CITY OF PRESCOTT.

NO.	BY	DATE	REVISIONS	APPRV	DATE
				CITY	

ENGINEER

REVIEW:

CIP #: 15-027

FILE NAME&PATH: Z:\APPRJ\115887 PRESCOTT DRAINAGE - AUTUMN BREEZE\00 DESIGN\DSS\115887 01 COVER.DWG

CITY OF PRESCOTT GENERAL NOTES

1. ALL CONSTRUCTION SHALL CONFORM TO MARICOPA ASSOCIATION OF GOVERNMENTS (MAG), LATEST REVISIONS, & CITY OF PRESCOTT SUPPLEMENT TO MAG SPECIFICATIONS (COP SPECIFICATIONS) AND THE CITY OF PRESCOTT (COP) STANDARD DETAILS, LATEST REVISIONS, UNLESS SPECIFICALLY MODIFIED ON THE PLANS.
2. IT SHALL BE THE CONTRACTOR'S RESPONSIBILITY TO OBTAIN COPIES OF MAG AND COP STANDARDS AND SPECIFICATIONS AS WELL AS ALL OTHER STANDARDS AND SPECIFICATIONS NECESSARY TO COMPLETELY AND ACCURATELY INTERPRET THESE PLANS.
3. ALL PLANS SIGNED BY THE PUBLIC WORKS DIRECTOR ARE NULL AND VOID ONE YEAR FROM DATE OF SIGNATURE IF CONSTRUCTION HAS NOT STARTED.
4. ALL QUANTITIES SHOWN ON PLANS ARE NOT VERIFIED BY THE ENGINEER. THE CONTRACTOR SHALL VERIFY ALL QUANTITIES SHOWN AND MAKE HIS BID BASED UPON THOSE VERIFICATIONS. IF ANY DISCREPANCY IN QUANTITIES IS FOUND, CONTRACTOR SHALL NOTIFY THE ENGINEER OF SUCH NO LATER THAN 24 HOURS PRIOR TO BID OPENING.
5. A CITY OF PRESCOTT PUBLIC WORKS DEPARTMENT PERMIT WILL BE REQUIRED FOR ALL OFF–SITE CONSTRUCTION AND CONSTRUCTION WITHIN THE PUBLIC RIGHT OF WAY.
6. IF IS THE SOLE RESPONSIBILITY OF THE CONTRACTOR TO OBTAIN, AT HIS OWN EXPENSE, SUCH PERMITS AS ARE REQUIRED FROM THE APPROPRIATE AGENCIES.
7. THE PUBLIC WORKS DEPARTMENT SHALL BE NOTIFIED A MINIMUM OF 24 HOURS PRIOR TO BEGINNING ANY CONSTRUCTION IN THE PUBLIC RIGHT OF WAY (928) 777–1640.
8. INSPECTION IS TO BE DONE BY THE CITY OF PRESCOTT PUBLIC WORKS DEPARTMENT.
9. ANY WORK PERFORMED WITHOUT THE KNOWLEDGE OF THE CITY OF PRESCOTT INSPECTOR OR HIS REPRESENTATIVE IS SUBJECT TO REMOVAL AND REPLACEMENT OF SAME, TO BE DONE AT THE CONTRACTOR'S EXPENSE.
10. ALL WORK AND MATERIALS, WHICH DO NOT CONFORM TO THE SPECIFICATIONS, ARE SUBJECT TO REMOVAL AND REPLACEMENT AT THE CONTRACTOR'S EXPENSE.
11. APPROVAL OF A PORTION OF THE WORK IN PROGRESS DOES NOT GUARANTEE ITS FINAL ACCEPTANCE. TESTING AND EVALUATION MAY CONTINUE UNTIL THE WRITTEN FINAL ACCEPTANCE OF A COMPLETE AND WORKABLE UNIT.
12. THE CITY OF PRESCOTT MAY SUSPEND THE WORK BY WRITTEN NOTICE, WHEN, IN ITS JUDGMENT, PROGRESS IS UNSATISFACTORY, WORK BEING DONE IS UNAUTHORIZED OR DEFECTIVE, WEATHER CONDITIONS ARE UNSUITABLE, OR THERE IS A DANGER TO THE PUBLIC HEALTH AND SAFETY.
13. THE CONTRACTOR SHALL PROVIDE SUFFICIENT MEN AND EQUIPMENT ON THE JOB AT ALL TIMES DURING CONSTRUCTION TO COMPLY WITH SPECIFICATIONS AND TO COMPLETE WORK.
14. CONTRACTOR SHALL BE RESPONSIBLE FOR CONSTRUCTION SURVEYING AND LOT LAYOUT.
15. THE CONTRACTOR SHALL NOTIFY "BLUE STAKE" AT 811 OR 1–800–782–5348 OR AT LEAST 48 HOURS PRIOR TO CONSTRUCTION.
16. IT IS THE CONTRACTOR'S RESPONSIBILITY TO LOCATE ALL UNDERGROUND PIPELINES, TELEPHONE AND ELECTRIC CONDUITS AND STRUCTURES IN ADVANCE OF ANY CONSTRUCTION AND WILL OBSERVE ALL POSSIBLE PRECAUTIONS TO AVOID ANY DAMAGE TO SUCH. THE ENGINEER AND/OR CITY WILL NOT GUARANTEE ANY LOCATIONS AS SHOWN ON THESE PLANS, OR THOSE OMITTED FROM IT.
17. THE CONTRACTOR IS TO UNCOVER ALL EXISTING LINES BEING TIED INTO AND VERIFY GRADES, PIPE MATERIAL, AND PIPE DIAMETER BEFORE MATERIAL SUBMITTALS AND PLANNED CONSTRUCTION ACITIVITIES.
18. ARIZONA DEPARTMENT OF ENVIRONMENTAL QUALITY REQUIREMENTS SHALL BE COMPILED WITH.
19. ALL WATER LINES SHALL BE PROVIDED WITH 14 AWG HS–CCS WIRE. TRACE WIRE SHALL BE SUBJECT TO TRACEABILITY TEST.
20. WATER/SEWER SEPARATION SHALL BE PURSUANT TO AAC R–18–5–502C AND COP SPECIFICATIONS.
21. WATER MAINS SHALL BE SUBJECT TO A PRESSURE AND LEAKAGE TEST IN ACCORDANCE WITH AWWA C–600 STANDARD.
22. WATER MAINS SHALL BE DISINFECTED IN ACCORDANCE WITH ADEQ ENGINEERING BULLETIN NO. 8 "DISINFECTION OF WATER SYSTEMS."
23. OPERATION OF VALVES TO BE DONE BY CITY PERSONNEL ONLY.
24. ALL PIPELINE MATERIALS SHALL BE INSTALLED PER MANUFACTURER'S REQUIREMENTS UNLESS SUPERSEDED BY COP SPECIFICATIONS.
25. ALL MATERIALS FOR WATER LINE CONSTRUCTION SHALL MEET AAC R–18–4–119.
26. ARIZONA DEPARTMENT OF ENVIRONMENTAL QUALITY REQUIREMENTS WILL APPLY WHEN MORE STRINGENT THAN MAG STANDARD SPECIFICATIONS; MORE SPECIFICALLY WHERE THEY PERTAIN TO MAXIMUM ALLOWABLE SEWER LINE/PRESSURE SEWER LINE EXFILTRATION–INFILTRATION RATES.
27. SEWER LINE LOW–PRESSURE AIR TESTS SHALL BE DONE ON 100% OF ALL LINES.
28. SEWER MANHOLES EXFILTRATION TESTS SHALL BE DONE ON 100% OF ALL MANHOLES. VACUUM TESTING IN ACCORDANCE WITH CITY OF PRESCOTT STANDARDS MAY BE USED IN LIEU OF EXFILTRATION TEST.
29. SEWER LINE DEFLECTION TESTS SHALL BE DONE ON 100% OF ALL PIPES.
30. PRIOR TO PROJECT ACCEPTANCE, THE CONTRACTOR SHALL BE RESPONSIBLE FOR PROVIDING THE CITY OF PRESCOTT WITH VIDEO (DVD) OF THE ENTIRE SEWER MAIN INSTALLED INCLUDING SERVICE LATERALS. THE VIDEO WILL BE PREVIEWED AND DEEMED ACCEPTABLE BY THE CITY PRIOR TO PROJECT RELEASE.
31. ACCEPTANCE OF THE COMPLETED WATER/SEWER SYSTEM WILL NOT BE GIVEN UNTIL 3 ML PHOTO MYLAR OR XEROX GRAPHIC "AS–BUILT" REPRODUCIBLE PLANS AND ALL REQUIRED DIGITAL FILES HAVE BEEN SUBMITTED BY A REGISTERED PROFESSIONAL ENGINEER AND APPROVED BY THE ENGINEER.
32. CONTRACTOR SHALL WARRANT ALL WORK FOR A MINIMUM OF TWO YEARS AFTER FORMAL ACCEPTANCE OF THE WORK.

PAVING NOTES

1. EXACT POINT OF MATCHING TERMINATION AND OVERLAY, IF NECESSARY, SHALL BE DETERMINED IN THE FIELD BY THE TOWN'S REPRESENTATIVE.

2. NO JOB WILL BE CONSIDERED COMPLETE UNTIL: A) ALL CURBS, PAVEMENTS, SIDEWALKS, AND MANHOLES HAVE BEEN CLEANED OF ALL DIRT AND DEBRIS; B) SURVEY MONUMENTS ARE INSTALLED AND STAMPED; C) ALL FRAMES, COVERS, AND VALVE BOXES ARE ADJUSTED TO GRADE.

3. NO PAVING CONSTRUCTION SHALL BE STARTED UNTIL ALL UTILITY LINES ARE COMPLETED AND APPROVED UNDER PROPOSED PAVED AREAS.

4. BASE COURSE WILL NOT BE PLACED UNTIL SUBGRADE HAS BEEN APPROVED BY THE TOWN'S REPRESENTATIVE.

5. THE LOCATION OF ALL WATER VALVES, FIRE HYDRANTS, AND MANHOLES MUST AT ALL TIMES DURING CONSTRUCTION BE REFERENCED AND MADE ACCESSIBLE TO THE TOWN.

6. UTILITY FACILITIES IN CONFLICT WITH THIS WORK WILL BE RELOCATED BY THE PERMITTEE OR THE UTILITY OWNER. THIS ACTIVITY SHALL BE COORDINATED WITH THE OWNER OF THE UTILITY TO PREVENT ANY UNNECESSARY INTERRUPTION OF SERVICE TO EXISTING CUSTOMERS.

7. EXISTING STREET AND TRAFFIC SIGNS WILL BE MAINTAINED DURING CONSTRUCTION AND RELOCATED BY THE PERMITTEE AS DIRECTED BY THE TOWN REPRESENTATIVE.

RIGHT–OF–WAY AND TRAFFIC CONTROL

THE CONTRACTOR SHALL PROVIDE ANY NECESSARY TRAFFIC CONTROL DEVICES REQUIRED FOR THE CONTROL OF VEHICLE AND PEDESTRIAN TRAFFIC AFFECTED BY THE CONSTRUCTION. ALL TRAFFIC CONTROL PLANS MUST BE APPROVED BY THE TOWN PRIOR TO IMPLEMENTATION.

UTILITIES

UNDERGROUND UTILITY LOCATIONS AND VALVE COVERS SHOWN ON THESE PLANS WERE DETERMINED FROM FIELD MEASUREMENTS, CONSTRUCTION PLANS, RECORD PLANS, OR UTILITY MAPS FURNISHED BY OTHERS. LOCATIONS OF UNDERGROUND AND SURFACE APPURTENANCES TO THE UTILITIES ARE TO BE REGARDED AS APPROXIMATE ONLY. IT IS THE CONTRACTOR'S RESPONSIBILITY TO ESTABLISH IN THE FIELD THE ACTUAL LOCATIONS AND NUMBER OF ALL UNDERGROUND LINES AND SURFACE APPURTENANCES WHICH MAY IN ANY WAY AFFECT THE WORK.

IT IS NOT WITHIN THE SCOPE OF THE PLANS FOR THE ENGINEER TO LOCATE, IDENTIFY OR FORESEE EVERY UTILITY CONFLICT WHICH MAY ARISE DURING THE CONSTRUCTION PHASE OF THE PROJECT. BUT IT IS THE INTENT OF THE OWNER TO REASONABLY COMPENSATE THE CONTRACTOR FOR WORK REQUIRED TO RELOCATE OR ADJUST UTILITIES CONFLICTING WITH THE CONSTRUCTION OF THE PROJECT. TO THAT END, UTILITIES (AS DEFINED IN MAG SS 101.2) WHICH ARE ENCOUNTERED WILL BE ADDRESSED AS FOLLOWS:

1) UTILITY RELOCATIONS OR ADJUSTMENTS NOTED ON THE PLANS SHALL BE PAID FOR ON A LUMP SUM BASIS.

2) UTILITY RELOCATIONS OR ADJUSTMENTS NOT READILY VISIBLE FROM THE SURFACE PRIOR TO CONSTRUCTION OR KNOWN FROM PREVIOUS PLANS SHALL BE ADDRESSED ON A CASE BY CASE BASIS. THE TOWN SHALL DETERMINE WHAT WORK IS REQUIRED TO PRODUCE THE DESIRED FINAL PRODUCT. IF A UNIT BID PRICE DOES NOT EXIST THEN COMPENSATION MUTUALLY ACCEPTABLE TO THE OWNER AND CONTRACTOR SHALL BE MADE.

IN EITHER SITUATION, WORK ON THE SPECIFIC CASE SHALL NOT PROCEED UNTIL THE AMOUNT OF COMPENSATION IS AGREED UPON.

COMPENSATION FOR UTILITY RELOCATIONS AND ADJUSTMENTS SHALL NOT INCLUDE COSTS FOR REPAIR TO THE UTILITY DAMAGED BY THE CONTRACTOR OR HIS SUBCONTRACTOR(S). THE CONTRACTOR IS NOT RELIEVED OF THE RESPONSIBILITY FOR DETERMINING THE LOCATION OF ALL UTILITIES AFFECTING THE WORK.

THE APPROPRIATE UTILITY COMPANIES SHALL BE NOTIFIED BY THE CONTRACTOR PRIOR TO ANY CONSTRUCTION. THE "BLUE STAKE" NUMBER IS 1–800–STAKEIT. CONTRACTOR SHALL ALLOW TWO WORKING DAYS AFTER "BLUE STAKE" IS NOTIFIED, BEFORE COMMENCING ANY EXCAVATION WORK IN THE PROXIMITY OF BURIED UTILITIES.

AT LEAST 48 HOURS PRIOR NOTICE IS REQUIRED BEFORE DISRUPTING EXISTING UTILITY SERVICE TO MAKE CONNECTIONS OR DISCONNECTIONS. THE NOTICE MUST INCLUDE THE EXACT TIME OF THE DISRUPTION OF SERVICE AND THE EXPECTED DURATION OF THE LOSS OF SERVICE. CERTAIN UTILITIES ARE TO REMAIN IN SERVICE DURING THE CONSTRUCTION OF THE FILL AND UPON COMPLETION OF THIS CONTRACT. THESE UTILITIES SHALL BE PROTECTED DURING THE CONSTRUCTION AND CUT OR FILL PLACEMENT SHALL NOT PROHIBIT MAINTENANCE ACCESS TO THESE UTILITIES.

DRAINAGE MAINTENANCE DURING CONSTRUCTION

ADEQUATE DRAINAGE OF THE CONSTRUCTION AREA SHALL BE PROVIDED AT ALL TIMES. CONSTRUCTION DRAINS SHALL BE PROVIDED AS NEEDED TO ENABLE WATER TO DRAIN FROM THE CONSTRUCTION AREA RAPIDLY AND WITHOUT DAMAGING THE WORK IN PROGRESS. TO FURTHER PROMOTE GOOD DRAINAGE OF THE SITE, DRAINAGE CHANNELS, CULVERTS, AND STRUCTURES SHALL BE CONSTRUCTED FROM DOWNSTREAM TO UPSTREAM IN SUCH A WAY THAT, DURING CONSTRUCTION, THEY DO NOT IMPEDE THE FLOW OF WATER FROM THE CONSTRUCTION AREA. DAMAGE TO ADJACENT PROPERTIES OR TO ANY PORTION OF THE WORK CAUSED BY THE CONTRACTOR'S FAILURE TO PROVIDE ADEQUATE DRAINAGE OF THE CONSTRUCTION AREA OR TO ORDER THE WORK SO AS TO MINIMIZE THE POSSIBLE EXTENT OF SUCH DAMAGE, SHALL BE REPAIRED AT THE CONTRACTOR'S EXPENSE. NO EXTENSION OF TIME SHALL BE GRANTED ON ACCOUNT OF THE TIME REQUIRED TO MAKE SUCH REPAIRS.

FILL CONSTRUCTION

SITE PREPARATION, EXCAVATION, AND PLACEMENT SHALL BE IN ACCORDANCE WITH MAG SS 205 AND 206. ALL MATERIAL REQUIRED TO BUILD THE PROJECT AND THE DISPOSAL OF ANY EXCESS MATERIAL FROM THE SITE IS CONSIDERED INCIDENTAL TO THE PROJECT.

MISCELLANEOUS REMOVALS AND OTHER WORK

REMOVALS NECESSITATED BY THE WORK AS IT PROGRESSES AND NOT SPECIFICALLY CALLED OUT ON THE PLANS WILL BE CONSIDERED INCIDENTAL WORK.

WATER SUPPLY

THE CONTRACTOR SHALL MAKE ARRANGEMENTS FOR AND PROVIDE ALL NECESSARY WATER FOR HIS CONSTRUCTION OPERATION AT HIS OWN EXPENSE. CONSTRUCTION WATER MAY BE PURCHASED FROM THE SOUTH GRAND CANYON SANITARY DISTRICT OR HYDRO RESOURCES.

CLEANUP AND DUST CONTROL

THROUGHOUT ALL PHASES OF THE CONSTRUCTION THE CONTRACTOR SHALL KEEP THE WORK AREA, ADJACENT PROPERTIES, AND STREETS CLEAN AND FREE FROM RUBBISH, EXCESS MATERIALS, DUST, AND DEBRIS GENERATED BY THE CONSTRUCTION ACTIVITY.

PROTECTION AND RESTORATION OF PROPERTY AND LANDSCAPE: (MAG SS 107.9)

THE CONTRACTOR SHALL BE RESPONSIBLE FOR THE PRESERVATION OF ALL PUBLIC AND PRIVATE PROPERTY AND SHALL PROTECT CAREFULLY FROM DISTURBANCE OR DAMAGE, ALL LAND MONUMENTS AND PROPERTY MARKS UNTIL THE ENGINEER HAS WITNESSED OR OTHERWISE REFERENCED THEIR LOCATION AND SHALL NOT MOVE THEM UNTIL DIRECTED.

PRIOR TO ANY CONSTRUCTION, THE CONTRACTOR SHALL RETAIN A PROFESSIONAL LAND SURVEYOR LICENSED IN THE STATE OF ARIZONA TO REFERENCE ALL SURVEY MONUMENTS. AFTER THE CONSTRUCTION IS COMPLETED, THE SAME LAND SURVEYOR SHALL RE–MONUMENT ANY DAMAGED OR MISSING SURVEY MONUMENTS PER THE "ARIZONA BOUNDARY SURVEY MINIMUM STANDARDS" AND ANY ADOT OR MAG SPECIFICATIONS CALLED FOR ON THE PLANS.

JOBSITE SAFETY

NEITHER THE PROFESSIONAL ACTIVITIES OF THE DESIGN PROFESSIONAL, NOR THE PRESENCE OF THE DESIGN PROFESSIONAL OR HIS OR HER EMPLOYEES AND SUB CONSULTANTS AT A CONSTRUCTION SITE, SHALL RELIEVE THE GENERAL CONTRACTOR AND ANY OTHER ENTITY OF THEIR OBLIGATIONS, DUTIES AND RESPONSIBILITIES INCLUDING, BUT NOT LIMITED TO, CONSTRUCTION MEANS, METHODS, SEQUENCE, TECHNIQUES OR PROCEDURES NECESSARY FOR PERFORMING, SUPERINTENDING OR COORDINATING ALL PORTIONS OF THE WORK OF CONSTRUCTION IN ACCORDANCE WITH THE CONTRACT DOCUMENTS AND ANY HEALTH OR SAFETY PRECAUTIONS REQUIRED BY ANY REGULATORY AGENCIES. THE DESIGN PROFESSIONAL AND HIS OR HER PERSONNEL HAVE NO AUTHORITY TO EXERCISE ANY CONTROL OVER ANY CONSTRUCTION CONTRACTOR OR OTHER ENTITY OR THEIR EMPLOYEES IN CONNECTION WITH THEIR WORK OR ANY HEALTH OR SAFETY PRECAUTIONS. THE CLIENT AGREES THAT THE GENERAL CONTRACTOR IS SOLELY RESPONSIBLE FOR JOBSITE SAFETY, AND WARRANTS THAT THIS INTENT SHALL BE MADE EVIDENT IN THE CLIENT'S AGREEMENT WITH THE GENERAL CONTRACTOR. THE CLIENT ALSO AGREES THAT THE CLIENT, THE DESIGN PROFESSIONAL AND THE DESIGN PROFESSIONAL'S CONSULTANTS SHALL BE INDEMNIFIED AND SHALL BE MADE ADDITIONAL INSUREDS UNDER THE GENERAL CONTRACTOR'S GENERAL LIABILITY INSURANCE POLICY.

NATIONAL POLLUTANT DISCHARGE ELIMINATION SYSTEM (NPDES) NOTE

THE ENVIRONMENTAL PROTECTION AGENCY (EPA) REGULATES STORM WATER DISCHARGES FROM CONSTRUCTION SITES UNDER THE NATIONAL STORM WATER PROGRAM. THE PROJECT OWNER AND THE CONSTRUCTION CONTRACTOR SHARE RESPONSIBILITY AND LIABILITY UNDER THIS PROGRAM. ACTIVITIES COVERED UNDER THIS PROGRAM INCLUDE CLEARING, GRADING, AND EXCAVATION. PROJECTS THAT ARE INCLUDED HAVE DISTURBED AREAS WITH MORE THAN 1 ACRES. UNDER NPDES THE CONTRACTOR MUST PREVENT POLLUTANTS FROM THE SITE FROM ENTERING WATERS OF THE US.

IT IS THE CONTRACTOR'S RESPONSIBILITY TO CONTROL EROSION AND RUNOFF FROM A CONSTRUCTION SITE. TO COMPLY WITH REGULATIONS, THE CONTRACTOR MUST FILE A NOTICE OF INTENT TO DISCHARGE (NOI) 2 DAYS BEFORE CONSTRUCTION BEGINS. A STORM WATER POLLUTION PREVENTION PLAN (SWPPP) MUST BE DEVELOPED BY BOTH THE OWNER AND THE CONTRACTOR AS PART OF COMPLIANCE WITH THESE REGULATIONS. THE OWNER AND THE CONTRACTOR MUST ALSO IMPLEMENT THE SWPPP. DURING CONSTRUCTION, BOTH THE OWNER AND THE CONTRACTOR MUST CERTIFY THAT ALL WORK PERFORMED IS PER NPDES REGULATIONS. AFTER CONSTRUCTION IS COMPLETE, THE OWNER AND THE CONTRACTOR MUST FILE A NOTICE OF TERMINATION. ALL WORK DESCRIBED ABOVE MUST BE PERFORMED IN ACCORDANCE WITH NPDES AND THE NATIONAL STORM WATER PROGRAM REGULATIONS.

WOODSON ENGINEERING GENERAL NOTES

THE WORK SHALL BE DONE IN ACCORDANCE WITH THE MOST CURRENT EDITION(S) OF THE FOLLOWING SPECIFICATIONS AND THESE PLANS: MAG UNIFORM STANDARD SPECIFICATIONS FOR PUBLIC WORKS CONSTRUCTION, MAG UNIFORM STANDARD DETAILS FOR PUBLIC WORKS CONSTRUCTION, COCONINO COUNTY ENGINEERING DESIGN AND CONSTRUCTION STANDARDS, ADHS (ADEQ) ENGINEERING BULLETINS NO. 8 AND 10 (WATER SYSTEMS), ADHS (ADEQ) ENGINEERING BULLETINS NO. 11 AND 12 (SEWAGE WORKS), AWWA STANDARDS, MANUAL ON UNIFORM TRAFFIC CONTROL DEVICES (MUTCD), ADOT STANDARD SPECIFICATIONS AND DRAWINGS, AND TOWN OF TUSAYAN REQUIREMENTS.

IT SHALL BE THE CONTRACTOR'S RESPONSIBILITY TO OBTAIN COPIES OF THE ABOVE STANDARDS, SPECIFICATIONS, AND DETAILS, AS WELL AS ALL OTHER STANDARDS AND SPECIFICATIONS WHICH MAY BE NECESSARY TO COMPLETELY AND ACCURATELY INTERPRET THESE PLANS.

ALL QUANTITIES SHOWN ARE APPROXIMATE AND ARE FURNISHED SOLELY FOR THE CONTRACTOR'S CONVENIENCE. THEY DO NOT NECESSARILY CORRESPOND TO BID SCHEDULE ITEMS. PAYMENT WILL BE BASED ON BID SCHEDULE ITEMS FOR THE ENTIRE JOB AS SHOWN OR INFERRED BY THESE PLANS. THE CONTRACTOR SHALL NOT BE RELIEVED OF RESPONSIBILITY FOR INDEPENDENTLY ESTIMATING QUANTITIES PRIOR TO BIDDING.

THE LOCATION OF EXISTING FEATURES INDICATED ON THE PLANS ARE APPROXIMATE ONLY. THE CONTRACTOR SHALL NOT BE RELIEVED OF RESPONSIBILITY FOR MAKING COMPLETE AND ACCURATE ON–SITE DETERMINATIONS OF THE LOCATIONS OF ALL UTILITIES, STRUCTURES AND FIELD CONDITIONS, WHICH MAY AFFECT THE PROGRESS OF THE WORK.

THE CONTRACTOR IS RESPONSIBLE FOR DETERMINING WHAT PERMITS WILL BE REQUIRED FOR THE WORK AND OBTAINING AT HIS OWN EXPENSE ALL PERMITS REQUIRED UNLESS STATED OTHERWISE IN THE CONTRACT.

CERTIFICATION OF PRIVATE/NON–BUILDING STRUCTURES MAY BE REQUIRED BY THE TOWN OF TUSAYAN. IT IS THE RESPONSIBILITY OF THE CONTRACTOR TO OBTAIN ANY REQUIRED CERTIFICATIONS.

ALL ELEVATIONS SHOWN ON THE PLANS ARE FINISHED SURFACE ELEVATIONS (EXCEPT AS NOTED).

THE REGISTRANTS DUTY TO SEAL PROFESSIONAL DOCUMENTS DOES NOT EXTEND TO STANDARD DETAILS OR SPECIFICATIONS THAT HAVE BEEN OFFICIALLY ADOPTED AND PROVIDED BY THE AGENCY THAT HAS JURISDICTION OVER THIS PROJECT. THE STANDARD DETAILS AND SPECIFICATIONS SHOWN WITH THESE DOCUMENTS ARE INCLUDED TO PROVIDE CLEAR AND COMPLETE INFORMATION AND WERE NOT PREPARED BY THE REGISTRANT.

DESIGN WIND LOAD

ALL SIGNS, LIGHT POSTS, AND OTHER STREET RELATED STRUCTURES SHALL BE DESIGNED AND MANUFACTURED TO WITHSTAND A DESIGN WIND LOAD OF NINETY (90) MILES PER HOUR AND SHALL ALSO COMPLY WITH ALL OTHER LOCAL CODES, ORDINANCES AND REGULATIONS.

LEGEND

CONCRETE
ASPHALT
RIGHT OF WAY
PROPERTY BOUNDARY
EASEMENT
EXISTING ASPHALT EDGE
EXISTING CONCRETE EDGE
EXISTING MAJOR CONTOUR
EXISTING MINOR CONTOUR
FLOWLINE
UNDERGROUND ELECTRIC LINE
SANITARY–SEWER LINE
WATER LINE
STORM DRAIN
FIBER OPTIC LINE
ELECTRIC RISER
GAS METER
TELEPHONE RISER
WATER METER
WATER VALVE
SANITARY–SEWER MANHOLE
SANITARY–SEWER CLEAN OUT
STORM DRAIN MANHOLE
EXISTING CATCH BASIN
NEW CATCH BASIN

APPROXIMATE QUANTITIES
PUBLIC IMPROVEMENTS

Line No.	Description	Units	Est Quant.
	ROADWAY IMPROVEMENTS		
1	Construction Staking	LS	1
2	Rock Check Dam	EA	2
3	Wattles	LF	160
4	Mobilization/Demobilization	LS	1
5	Contract Allowance	LS	1
6	Earthwork for Open Channels	CY	64
7	Ditch Forming	LF	185
8	Dumped Rip Rap (D50=8")	CY	20
9	Sub Grade Preparation	SY	38
10	Aggregate Base Course	CY	8
11	Asphalt Concrete Pavement(MAG C-3/4" Marshall)	SY	38
12	Concrete Curb Termination(MAG Std Det 222)	EA	3
13	Concrete Ribbon Curb(MAG Std Det 220-1TypeB)	LF	20
14	Concrete Sidewalk (COP Std Det 230P)	SF	168
15	Concrete Valley Gutter (COP Std Det 240P-1)	SF	152
16	Remove Asphaltic Concrete Pavement (Full Depth)	SY	57
17	Remove Concrete Sidewalk	SF	168
18	Remove Concrete Curb & Gutter	LF	55
19	Remove Concrete Catch Basin	LS	1
20	Traffic Control Plan	LS	1
21	Traffic Control Devices	LS	1
22	Incidental Traffic Related Items	LS	1
23	Seeding (Hydraulic)	AC	0.07
24	Remove & Replace Landscape Rock	LS	1
25	Concrete Catch Basin (MAG Std Det 533-1, Type D)	EA	1
26	Concrete Retaining Wall (2.5 ft height)	LF	32
	Add Alternate #1		
27	Rock Excavation for Drainage Construction	CY	1

EARTHWORK SUMMARY:

CUT –	53	C.Y.
FILL –	11	C.Y.
NET CUT –	42	C.Y.

DITCH CROSS SECTION
10+20
(LOOKING SOUTH)

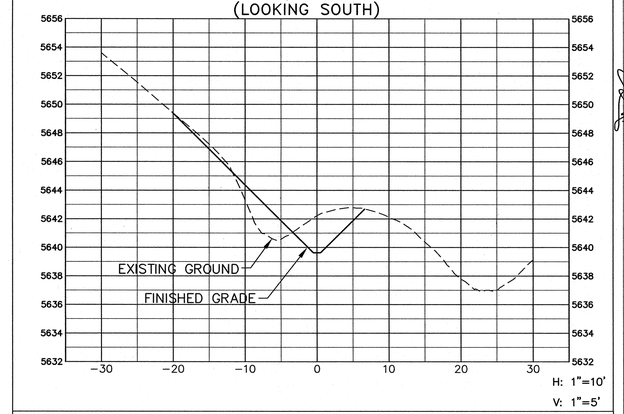

DITCH CROSS SECTION
11+60
(LOOKING SOUTH)

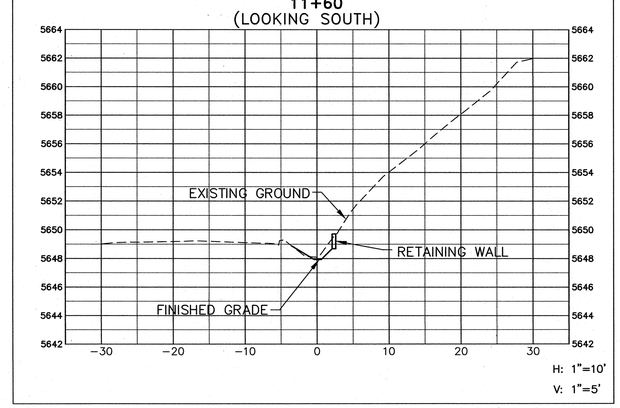

Call at least two full working days before you begin excavation.
ARIZONA 811
Arizona Blue Stake, Inc.
Dial 8-1-1 or 1-800-STAKE-IT (782-5348)
In Maricopa County: (602) 263-1100

DWG. NO. 2
DATE 04/15/16
SHEET NO. 2 OF 5

CITY OF PRESCOTT PUBLIC WORKS

AUTUMN BREEZE STREET IMPROVEMENTS
GENERAL NOTES, QUANTITIES & CROSS SECTIONS

WOODSON
ENGINEERING AND SURVEYING, INC.
124 N. ELDEN ST.
FLAGSTAFF, AZ 86001
PHONE: (928) 774–4636 FAX: (928) 774–4646

PREPARED BY: AB | CHECKED BY: SDP | FOR: COP

REGISTERED PROFESSIONAL ENGINEER (CIVIL) CERTIFICATE NO. 26962 SANDRA D. PHILLIPS Date Signed 3/31/17 ARIZONA U.S.A.
EXPIRES 3/31/2017

NOTE:
THE PRIVATE ENGINEER SIGNING THESE PLANS IS RESPONSIBLE FOR ASSURING THE CONSTRUCTION REPRESENTS THE DESIGN HEREON. IN THE EVENT OF DISCREPANCIES ARISING AFTER CITY APPROVAL OR DURING CONSTRUCTION, THE PRIVATE ENGINEER SHALL BE RESPONSIBLE FOR DETERMINING AN ACCEPTABLE SOLUTION AND REVISING THE PLANS FOR APPROVAL BY THE CITY OF PRESCOTT.

NO.	BY	DATE	REVISIONS	APPRV	DATE
				CITY	

ENGINEER

REVIEW:

CIP #: 15-027

FILE NAME&PATH: Z:\APROJ\115887 PRESCOTT DRAINAGE – AUTUMN BREEZE\00 DESIGN\CDS\115887 02 GEN NOTES.DWG

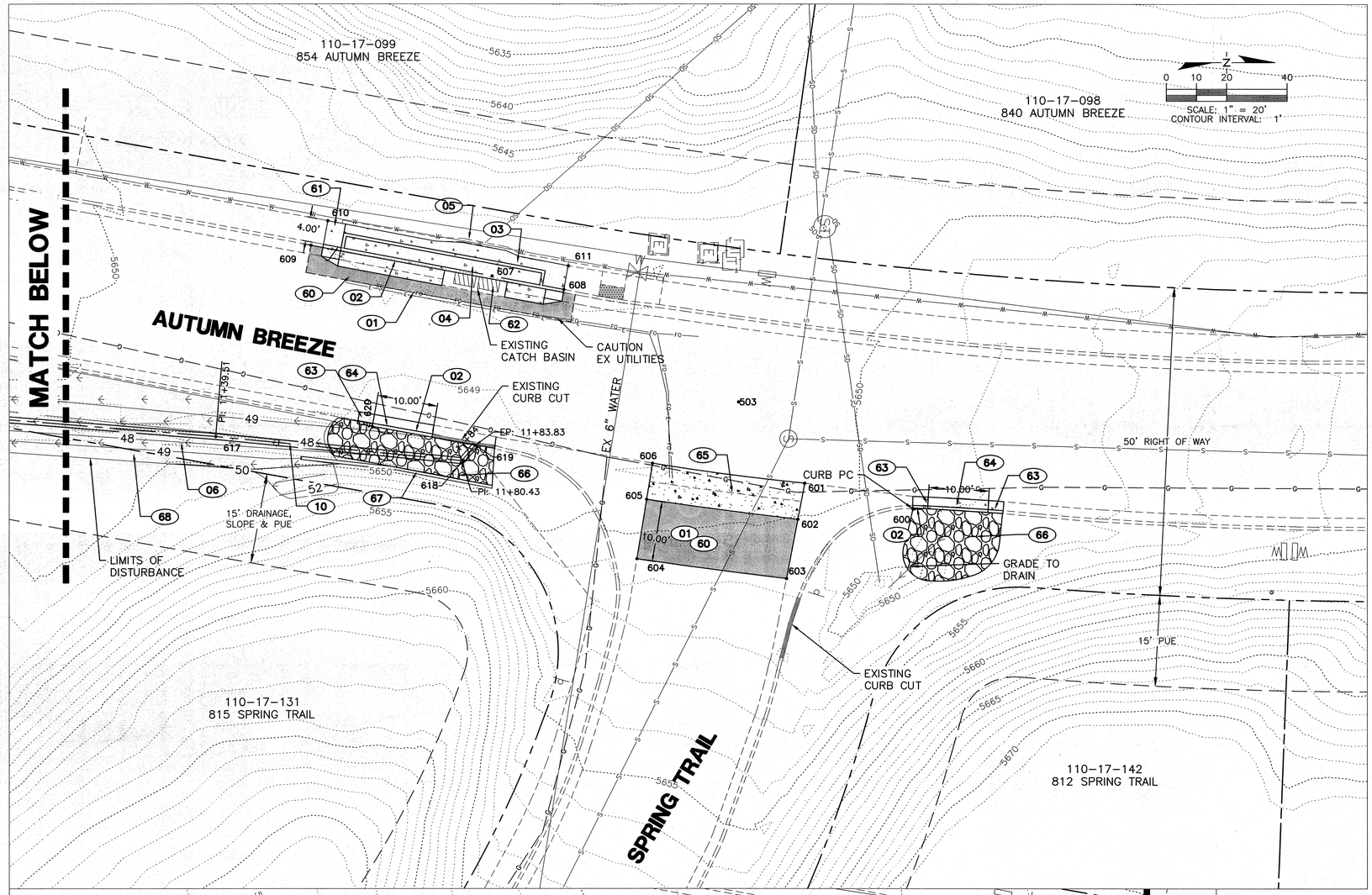

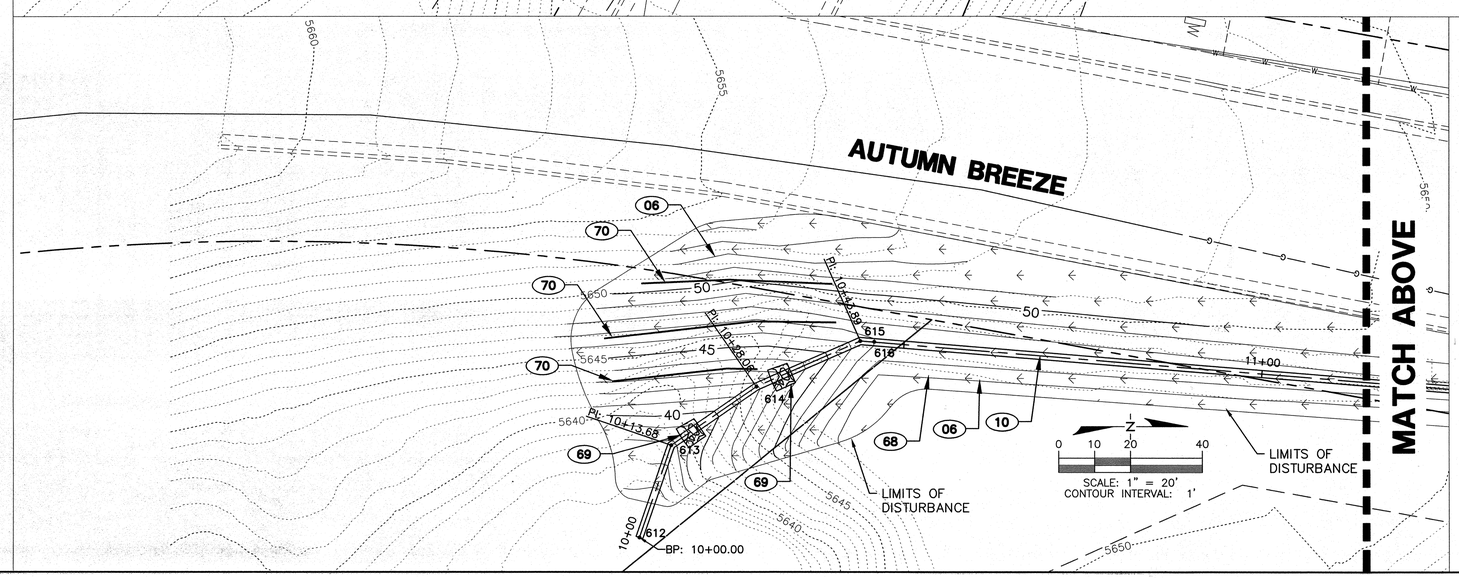

CONSTRUCTION NOTES
PUBLIC IMPROVEMENTS

01 SAWCUT AND REMOVE EXISTING A.C. PAVEMENT AND SOIL MATERIAL TO A DEPTH OF 10" FROM FINISH GRADE. DISPOSE OF MATERIAL OFFSITE AT AN APPROVED LOCATION.

02 SAWCUT, REMOVE AND DISPOSE OF EXISTING CURB & GUTTER.

03 SAWCUT, REMOVE AND DISPOSE OF EXISTING SIDEWALK.

04 SAWCUT, REMOVE AND DISPOSE EXISTING CATCH BASIN AT AN APPROVED LOCATION.

05 PROTECT EXISTING CURB IN PLACE.

06 GRADE PER CONTOURS SHOWN.

10 GRADE DITCH PER TYPICAL SECTION BELOW IN ACCORDANCE WITH MAG SS 215. LOCATE PER CONTROL POINTS ON THIS SHEET.

60 INSTALL 4" A.C. ON 6" AB PAVEMENT (OR MATCH EXISTING, WHICHEVER IS GREATER), PLACED ON 6" OF NATIVE SOIL COMPACTED TO 95%, PER MAG SS 310 & 321.

61 CONSTRUCT CONCRETE SIDEWALK PER PRESCOTT SD 230P AS SHOWN ON SHEET 4.

62 CONSTRUCT TYPE "D" (L=17' & L=6') CATCH BASIN, IN ACCORDANCE WITH MAG SD NO. 533. CONTROL POINT LOCATED AT BACK OF CURB IN THE MIDDLE OF THE CATCH BASIN.

63 CONSTRUCT CURB TERMINATIONS PER MAG SD 222.

64 CONSTRUCT RIBBON CURB PER MAG SD 220-1, TYPE 'B'.

65 CONSTRUCT 6' VALLEY GUTTER PRESCOTT SD 240-1.

66 INSTALL RIP RAP, D50=8", 12" THICK

67 CONSTRUCT 2.5 FT RETAINING WALL PER DETAIL ON SHEET 4

68 INSTALL HYDROSEED PER SPECIFICATIONS.

69 CONSTRUCT ROCK DAM PER DETAIL ON SHEET 5.

70 INSTALL WATTLES PER DETAIL ON SHEET 5.

NOTES:
RIGHT OF WAY AND PARCEL LINES ARE SHOWN FOR INFORMATIONAL PURPOSES ONLY AND ARE BASED ON CITY OF PRESCOTT GIS DATA.

AGGREGATE BASE IS REQUIRED UNDER ALL CONCRETE FLAT WORK AND CONCRETE STRUCTURES. COST IS INCIDENTAL TO THE LINE ITEMS UNLESS OTHERWISE NOTED.

POINT TABLE

POINT NO.	NORTHING	EASTING	ELEVATION	DESCRIPTION
503	583484.57	606898.92	5649.56	RB
504	583692.15	606904.45	5658.52	RB
505	583110.73	606866.76	5674.63	RB
600	583513.41	606916.64	5650.78	TBC PC
601	583495.54	606912.43	5649.76	VG
602	583494.39	606918.45	5650.02	VG
603	583492.51	606928.30	5650.80	AC
604	583467.72	606925.03	5650.54	AC
605	583469.34	606915.16	5649.43	VG
606	583470.33	606909.16	5649.02	VG
607	583443.76	606877.97	5649.28	TBC CB
608	583455.65	606880.21	5649.25	TBC
609	583413.78	606872.86	0.00	TBC
610	583416.57	606868.76	0.00	TBW
611	583456.40	606876.28	5649.44	TBW
612	583271.91	606924.37	5636.00	DITCH CL BEGIN
613	583276.35	606911.44	5637.83	DITCH CL PI
614	583288.19	606903.27	5641.93	DITCH CL PI
615	583302.68	606896.90	5646.45	DITCH CL PI
616	583304.61	606897.00	5647.00	DITCH CL VPI
617	583397.99	606904.66	5647.77	DITCH CL PI
618	583438.95	606908.74	5648.11	DITCH CL PI
619	583440.94	606906.17	5648.14	DITCH CL END
620	583423.90	606902.98	5649.29	TBC

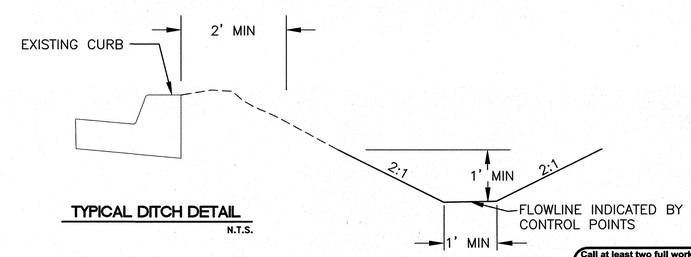

TYPICAL DITCH DETAIL
N.T.S.

Call at least two full working days before you begin excavation.
ARIZONA 811
Arizona Blue Stake, Inc.
Dial 8-1-1 or 1-800-STAKE-IT (782-5348)
In Maricopa County: (602) 263-1100

CITY OF PRESCOTT PUBLIC WORKS

AUTUMN BREEZE STREET IMPROVEMENTS
DRAINAGE PLAN

3 | DATE 04/15/16 | SHEET NO. 3 OF 5

WOODSON
ENGINEERING AND SURVEYING, INC.
124 N. ELDEN ST.
FLAGSTAFF, AZ 86001
PHONE: (928) 774-4636 FAX: (928) 774-4646

PREPARED BY	CHECKED BY	FOR:
AB	SDP	COP

REGISTERED PROFESSIONAL ENGINEER (CIVIL) CERTIFICATE NO. 26662 SANDRA D. PHILLIPS Date Signed 3/31/17 ARIZONA U.S.A.
EXPIRES 3/31/2017

NOTE:
THE PRIVATE ENGINEER SIGNING THESE PLANS IS RESPONSIBLE FOR ASSURING THE ACCURACY AND ADEQUACY OF THE DESIGN HEREON. IN THE EVENT OF DISCREPANCIES ARISING AFTER CITY APPROVAL OR DURING CONSTRUCTION, THE PRIVATE ENGINEER SHALL BE RESPONSIBLE FOR DETERMINING AN ACCEPTABLE SOLUTION AND REVISING THE PLANS FOR APPROVAL BY THE CITY OF PRESCOTT.

NO.	BY	DATE	REVISIONS	APPRV	DATE
				CITY	

ENGINEER

CIP #: 15-027

REVIEW:

FILE NAME&PATH: Z:\APPROJ\115887 PRESCOTT DRAINAGE - AUTUMN BREEZE\00 DESIGN\CDS\115887 03 DRAIN PLANSP.DWG

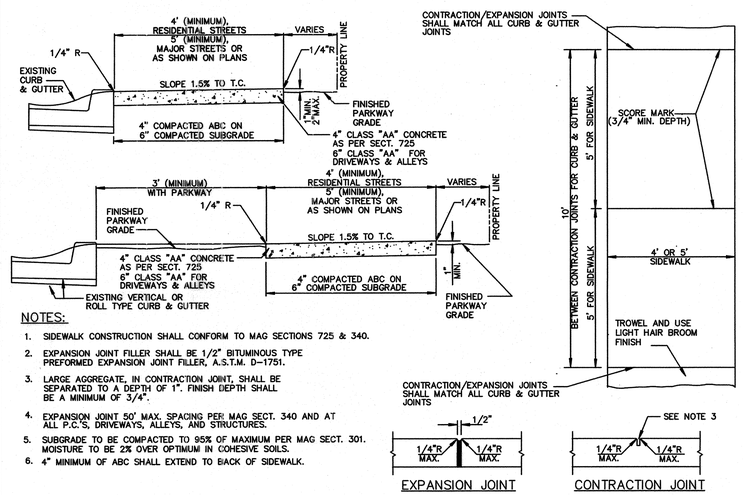

NOTES:

1. SIDEWALK CONSTRUCTION SHALL CONFORM TO MAG SECTIONS 725 & 340.
2. EXPANSION JOINT FILLER SHALL BE 1/2" BITUMINOUS TYPE PREFORMED EXPANSION JOINT FILLER, A.S.T.M. D-1751.
3. LARGE AGGREGATE, IN CONTRACTION JOINT, SHALL BE SEPARATED TO A DEPTH OF 1". FINISH DEPTH SHALL BE A MINIMUM OF 3/4".
4. EXPANSION JOINT 50' MAX. SPACING PER MAG SECT. 340 AND AT ALL P.C.'S, DRIVEWAYS, ALLEYS, AND STRUCTURES.
5. SUBGRADE TO BE COMPACTED TO 95% OF MAXIMUM PER MAG SECT. 301. MOISTURE TO BE 2% OVER OPTIMUM IN COHESIVE SOILS.
6. 4" MINIMUM OF ABC SHALL EXTEND TO BACK OF SIDEWALK.

COP STANDARD DETAIL	SIDEWALKS	CITY ENGINEER	REVISED: 05/15	DETAIL No. 230P

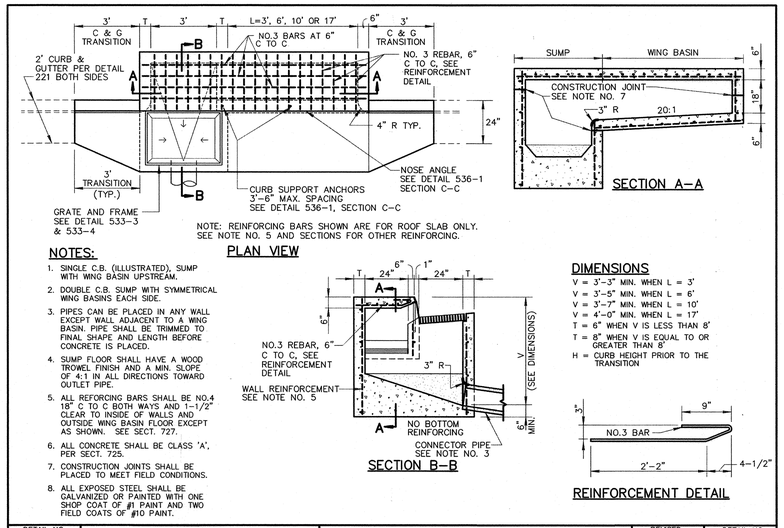

NOTES:

1. SINGLE C.B. (ILLUSTRATED), SUMP WITH WING BASIN UPSTREAM.
2. DOUBLE C.B. SUMP WITH SYMMETRICAL WING BASINS EACH SIDE.
3. PIPES CAN BE PLACED IN ANY WALL EXCEPT WALL ADJACENT TO A WING BASIN. PIPE SHALL BE TRIMMED TO FINAL SHAPE AND LENGTH BEFORE CONCRETE IS PLACED.
4. SUMP FLOOR SHALL HAVE A WOOD TROWEL FINISH AND A MIN. SLOPE OF 4:1 IN ALL DIRECTIONS TOWARD OUTLET PIPE.
5. ALL REFORCING BARS SHALL BE NO.4 18" C TO C BOTH WAYS AND 1-1/2" CLEAR TO INSIDE OF WALLS AND OUTSIDE WING BASIN FLOOR EXCEPT AS SHOWN. SEE SECT. 727.
6. ALL CONCRETE SHALL BE CLASS 'A', PER SECT. 725.
7. CONSTRUCTION JOINTS SHALL BE PLACED TO MEET FIELD CONDITIONS.
8. ALL EXPOSED STEEL SHALL BE GALVANIZED OR PAINTED WITH ONE SHOP COAT OF #1 PAINT AND TWO FIELD COATS OF #10 PAINT.

DIMENSIONS

V = 3'-3" MIN. WHEN L = 3'
V = 3'-5" MIN. WHEN L = 6'
V = 3'-7" MIN. WHEN L = 10'
V = 4'-0" MIN. WHEN L = 17'
T = 6" WHEN V IS LESS THAN 8'
T = 8" WHEN V IS EQUAL TO OR GREATER THAN 8'
H = CURB HEIGHT PRIOR TO THE TRANSITION

DETAIL NO.	MARICOPA ASSOCIATION of GOVERNMENTS	STANDARD DETAIL ENGLISH	CATCH BASIN TYPE 'D	REVISED 01-01-1998	DETAIL NO.
533-1					533-1

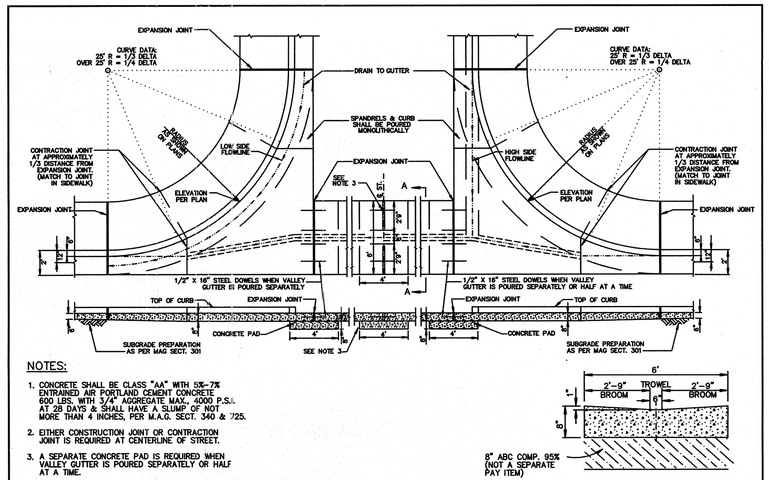

NOTES:

1. CONCRETE SHALL BE CLASS "AA" WITH 5%-7% ENTRAINED AIR PORTLAND CEMENT CONCRETE 600 LBS. WITH 3/4" AGGREGATE MAX., 4000 P.S.I. AT 28 DAYS & SHALL HAVE A SLUMP OF NOT MORE THAN 4 INCHES, PER M.A.G. SECT. 340 & 725.
2. EITHER CONSTRUCTION JOINT OR CONTRACTION JOINT IS REQUIRED AT CENTERLINE OF STREET.
3. A SEPARATE CONCRETE PAD IS REQUIRED WHEN VALLEY GUTTER IS POURED SEPARATELY OR HALF AT A TIME.
4. EXPANSION JOINTS SHALL CONFORM TO MAG SECT. 340.
5. NO CONCRETE SHALL BE PLACED PRIOR TO FORM INSPECTION BY THE CITY ENGINEER OR DESIGNEE.

COP STANDARD DETAIL	6' VALLEY GUTTER & SPANDRELS	CITY ENGINEER	REVISED: 05/15	DETAIL No. 240P-1

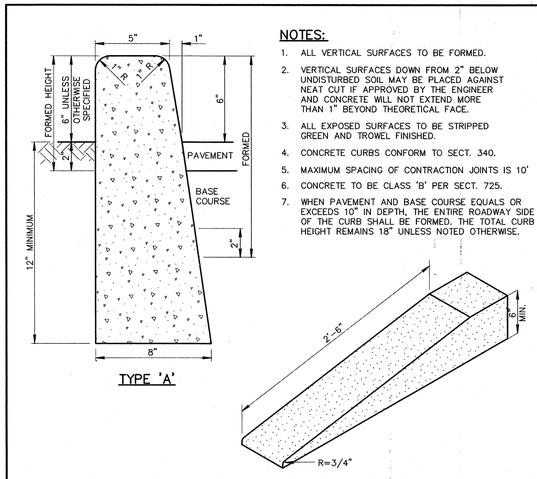

NOTES:

1. ALL VERTICAL SURFACES TO BE FORMED.
2. VERTICAL SURFACES DOWN FROM 2" BELOW UNDISTURBED SOIL MAY BE PLACED AGAINST NEAT CUT IF APPROVED BY THE ENGINEER AND CONCRETE WILL NOT EXTEND MORE THAN 1" BEYOND THEORETICAL FACE.
3. ALL EXPOSED SURFACES TO BE STRIPPED GREEN AND TROWEL FINISHED.
4. CONCRETE CURBS CONFORM TO SECT. 340.
5. MAXIMUM SPACING OF CONTRACTION JOINTS IS 10'
6. CONCRETE TO BE CLASS 'B' PER SECT. 725.
7. WHEN PAVEMENT AND BASE COURSE EQUALS OR EXCEEDS 10" IN DEPTH, THE ENTIRE ROADWAY SIDE OF THE CURB SHALL BE FORMED. THE TOTAL CURB HEIGHT REMAINS 18" UNLESS NOTED OTHERWISE.

DETAIL NO.	MARICOPA ASSOCIATION of GOVERNMENTS	STANDARD DETAIL ENGLISH	SINGLE CURB – TYPES A, B AND TERMINATION	REVISED 01-01-2008	DETAIL NO.
222					222

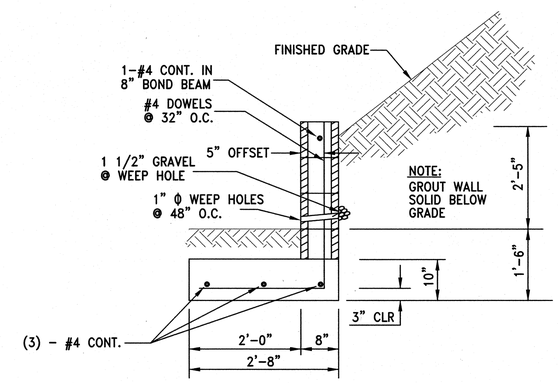

2'-5" HIGH RETAINING WALL

N.T.S.

1. 8" CMU MASONRY, MEDIUM Wt, ASTM C90, GRADE N, 1500 PSI.
2. MORTAR – ASTMC270, TYPE S, 1800 PSI.
3. GROUT – ASTM C476, 2000 PSI.
4. REINFORCING – ASTM A-615, Fy=40KSI.
5. CONCRETE – 2500 PSI
6. MIN LAP OF 24 INCHES

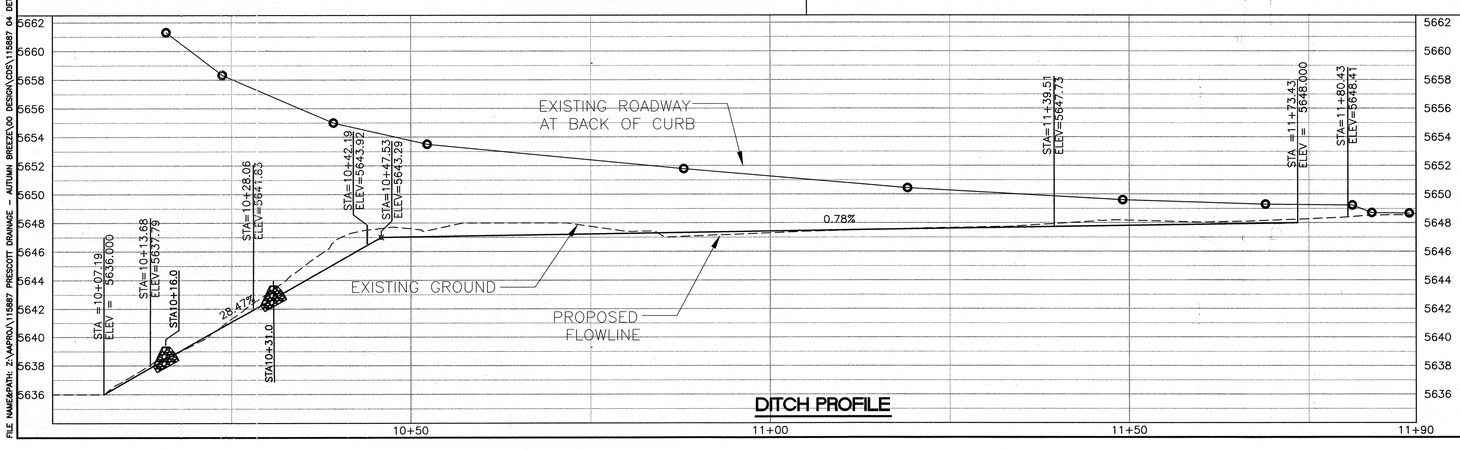

DITCH PROFILE

Call at least two full working days before you begin excavation.
ARIZONA 811
Arizona Blue Stake, Inc.
Dial 8-1-1 or 1-800-STAKE-IT (782-5348)
in Maricopa County: (602) 263-1100

CITY OF PRESCOTT PUBLIC WORKS

AUTUMN BREEZE STREET IMPROVEMENTS
DETAILS

DATE 04/15/16 | SHEET NO. 4 OF 5

WOODSON
ENGINEERING AND SURVEYING, INC.
57 N. ELDEN ST.
FLAGSTAFF, AZ 86001
PHONE: (928) 774-4636 FAX: (928) 774-4646

PREPARED BY	CHECKED BY	FOR:
AB	SDP	COP

REGISTERED PROFESSIONAL ENGINEER (CIVIL) CERTIFICATE NO. 26962 SANDRA D. PHILLIPS Date Signed 04/15/16 ARIZONA, U.S.A.
EXPIRES 3/31/2017

NOTE:
THE PRIVATE ENGINEER SIGNING THESE PLANS ASSUMES RESPONSIBILITY FOR THE ACCURACY AND ACCEPTABILITY OF THE DESIGN HEREON. IN THE EVENT OF DISCREPANCIES CONSTITUTING A TECHNICAL ERROR, THE PRIVATE ENGINEER SHALL BE RESPONSIBLE FOR DETERMINING AN ACCEPTABLE SOLUTION AND REVISING THE PLANS FOR APPROVAL BY THE CITY OF PRESCOTT.

NO.	BY	DATE	REVISIONS	APPRV	DATE
				CITY	

REVIEW:
ENGINEER
CIP #: 15-027

FILE NAME&PATH: Z:\APPROJ\115987 PRESCOTT DRAINAGE - AUTUMN BREEZE\00 DESIGN\CDS\115987 04 DETAILS.DWG

SECTION (NTS)

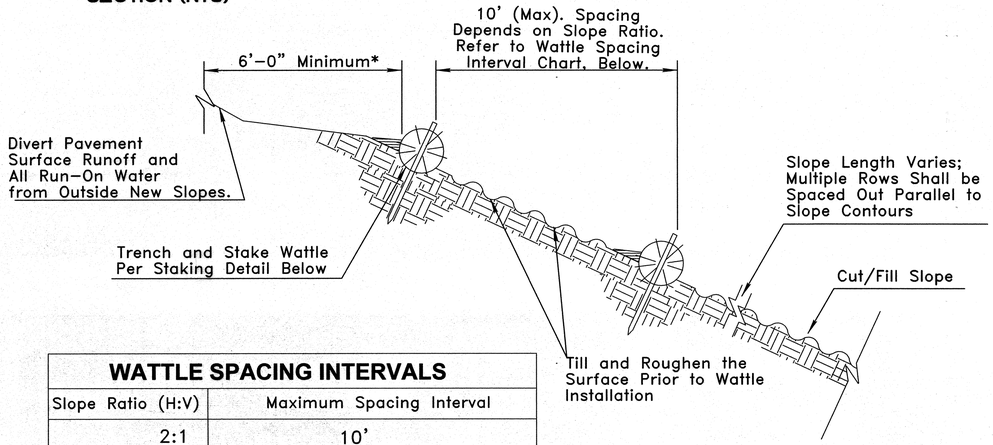

WATTLE SPACING INTERVALS

Slope Ratio (H:V)	Maximum Spacing Interval
2:1	10'
3:1	20'

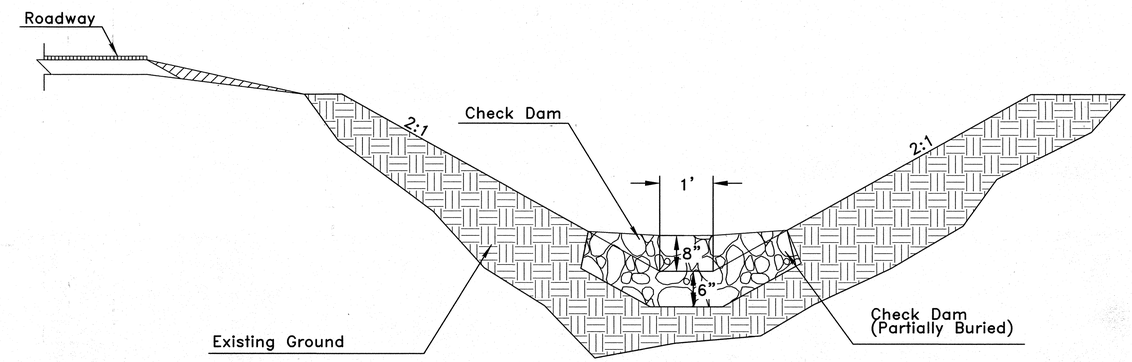

TRAPEZOIDAL DITCH (NTS)

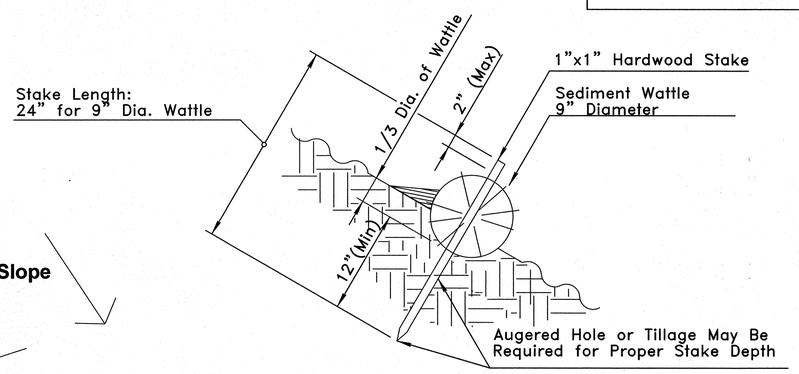

SEDIMENT WATTLE STAKING DETAIL (NTS)

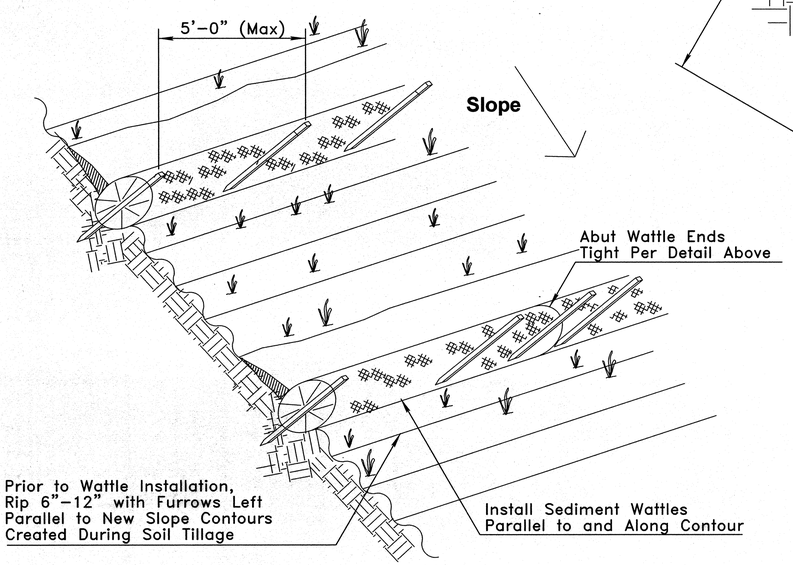

SEDIMENT WATTLE LAYOUT (NTS)

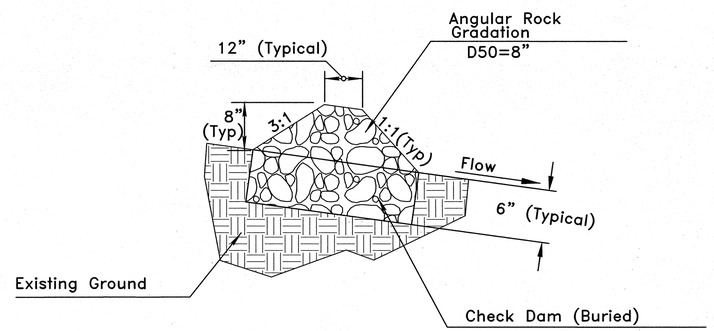

ELEVATION ALONG DITCH SLOPE (NTS)

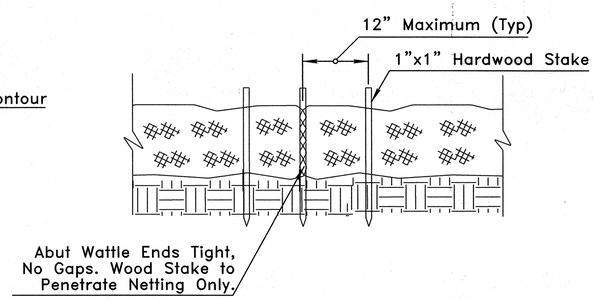

SEDIMENT WATTLE OVERLAP (NTS)

SEDIMENT WATTLE NOTE:

1. Sediment Wattles shall be in continuous contact with trench bottom and sides. Do not overlap wattle ends on top of each other. A 20" Dia. wattle may be made from 2-3 rolled excelsior or straw blankets.

ROCK CHECK DAM NOTE:

1. Construct Rock Check Dams with angular-shaped Gradation D50=8". Natural river-run materials such as rounded river rocks/cobblestones and pebbles are NOT acceptable.

Call at least two full working days before you begin excavation.
ARIZONA 811
Arizona Blue Stake, Inc.
Dial 8-1-1 or 1-800-STAKE-IT (782-5348)
In Maricopa County: (602) 263-1100

NO.	BY	DATE	REVISIONS	APPRV	DATE
				CITY	

ENGINEER

CIP #: 15-027

REVIEW:

5 DATE 04/15/16 SHEET NO. 5 OF 5

CITY OF PRESCOTT PUBLIC WORKS

AUTUMN BREEZE STREET IMPROVEMENTS
WATTLE & ROCK DAM DETAILS

WOODSON
ENGINEERING AND SURVEYING, INC.
124 N. ELDEN ST. FLAGSTAFF, AZ 86001
PHONE: (928) 774-4836 FAX: (928) 774-4846

PREPARED BY: AB | CHECKED BY: SDP | FOR: COP

REGISTERED PROFESSIONAL ENGINEER (CIVIL) CERTIFICATE NO. 26862 SANDRA D. PHILLIPS Date Signed 04/15/16 ARIZONA, U.S.A.

EXPIRES 3/31/2017

NOTE:
THE PRIVATE ENGINEER SIGNING THESE PLANS IS RESPONSIBLE FOR ASSURING THE ACCURACY AND ACCEPTABILITY OF THE DESIGN HEREON. IN THE EVENT OF DISCREPANCIES BEING FOUND AFTER COMMENCEMENT OF CONSTRUCTION, THE PRIVATE ENGINEER SHALL BE RESPONSIBLE FOR OBTAINING AN AMENDED PRELIMINARY STORM DRAINAGE PLANS FOR APPROVAL BY THE CITY OF PRESCOTT.

FILE NAME&PATH: Z:\WPROJ\115897 PRESCOTT DRAINAGE - AUTUMN BREEZE\00 DESIGN\C05\115897 05 BMPS.DWG