CITY OF PRESCOTT
ARIZONA
Everybody's Hometown

Public Works Department

433 N. Virginia Street
Prescott AZ 86301
928-777-1130

ADDENDUM NUMBER THREE
CLARIFICATIONS
for
Zone 12 Reservoir Project

DATE OF ADDENDUM: **December 3, 2012**

TO ALL BIDDERS BIDDING ON THE ABOVE PROJECT:

The following addendum shall be made part of the Contract Documents. All other provisions of the Contract Documents remain unchanged. The Bidder shall acknowledge receipt of this addendum on page 13 of the Proposal by inserting the addendum number and date on the executed page of the Proposal. The contents of this Addendum shall be given full consideration in the preparation of the Bid.

CLARIFICATION:

See project engineer's clarifications attached.

- END -

City of Prescott, Public Works Department

Mark Nietupski, Public Works Director

Acknowledgement: (**must** be signed and turned in with the bid documents)

Company Name	Date
Signature of Company Official	Date

Date: November 30, 2012

Zone 12 Reservoir

The following addendum/clarifications shall be made part of the Contract Documents. All other provisions of the Contract Documents remain unchanged.

CLARIFICATIONS

Clarification and explanation have been issued relating to questions submitted by potential bidders. Answers are provided herein by the Owner and Engineer.

- There are 3 - A340 details , please clarify?
  - The details are all for guardrail just separated into three different details. Notes on sheets A-06, and miscellaneous details various types of post connections on sheet A-07. A340 is a three sheet typical.
- Where is Details A400 & A347?
  - Details A400 & A347 are attached.
- Where are the concrete steps that call out for the 3-rail guard rail?
  - There are not steps within the project scope. The guardrail is referenced for the tank roof guardrail.
- Are the ladders all aluminum?
  - The exterior tank ladder is steel per M-04 the interior ladder is FRP per Section 13210.
- Are the ladder cages steel or aluminum?
  - Cage material shall match ladder material.

- Will the tank ladders and cages be picked up by the tank manufactures?
    - That will be between the prime contractor and the tank manufacture.
- Sheet S-06 , detail 3, the 'gate' (double gates)shows 1/2" x 4" flat bar @ 7'-6" with "J" bolts , however Detail E shows flat bar with steel tubing & what looks like barrel hinges , please clarify?
    - Detail 3 is at the larger main gate. Detail E is at the smaller man gate.
- Sheet S-06 , detail C 'Cane Bolt' makes reference to "Entrance Gate HSS 4" x 4" x 1/4" (square tube steel) , yet all the other details refer to gate frames as 3" x 2" x 3/16" Tube steel?
    - Previously answered via Addendum #2.
- On sheet C-02 key note D3 calls for a new crown ditch to be constructed that is a reinforced shotcrete channel. Is there a detail for this that can be provided? I don't see a detail and there doesn't seem to be any info in the spec for shotcrete application. I need to know what type of reinforcement as well
    - The shotcrete shall be Portland cement mortar per MAG Specification 220.6 with a thickness of 4-inches.
    - The reinforcement will be 6 x 6 – W1.4 x W1.4
- On sheet C-03 the profile on the bottom right corner of the page indicates that the new subdrain that will follow the existing natural drainage channel from the high side of the site to the low side of the site will be installed approximately 3 feet below current existing grade prior to tank engineered embankment construction. However, on sheet C-09 the bottom profile shows the subdrain being installed directly underneath the unsuitable material removal zone which is also the bottom of the engineered fill zone for the tank fill. So, should we excavate 3 feet down from the bottom of this over-ex zone for bottom of trench for this subdrain or should be excavate down into placed and compacted engineered fill to build the perforated pipe zone as shown in the detail in the top right corner of sheet C-09?
    - There are two sub drain lines, the first sub drain (A) follows the existing drainage channel from the southwest to the northeast, and a second sub drain (B) that starts at the northeast corner of the tank and flows around the south side of the reservoir to the west.
    - Sub Drain (A): This line will be installed three feet below existing ground along the existing channel flowline. If unsuitable soils are present below the existing 3-feet, the contractor shall follow the plans and specifications.
    - Sub Drain (B): This line will be installed per the sub drain detail on sheet C-09, beginning at the bottom of the over-ex zone.

- On sheet M-04 key note 10 indicates that a blind flange is required for the end of the pipe indicated by means of stainless steel bolts per detail D062 on sheet C-08. However, on sheet C-04 at the southwest end of pipe run PW-20 (20" suction line) note 2 indicates that a blow off is to be installed at this location. Is a blind flange going to be installed here or is a blow off going to be installed here?
    - Install a blow off per sheet C-04.
- Are we going to be allowed to gain access to the project site from the north side of the abandoned highway 89A where it meets the new highway alignment east of the Granite Dells Parkway interchange? This would be easier than going across that property that we did during the pre-bid. If our crews, subcontractors and suppliers have to enter and exiting the site along the route that was used during the pre-bid, would the contractor be allowed to soften the slope that steep slope that is along the route that we accessed the site from. If so, how would we contact the developer/owner of that land to determine if some grading of that slope could be done.
    - All traffic must stay on The City's easement. Accordingly, all bidders are notified that all access to the site is not available across private property. The existing paved road is a private road.
- Is there any type of a pre-emergent weed control spray that is required to be applied inside the CMU screen wall where construction note calls for 2 inches of gravel on sheet C-02?
    - No pre-emergent weed control spray is specified in the plans and specifications.
- Please confirm that CMU screen wall is to be coated.
    - The CMU screen wall will be coated with a concrete stain. The color will be selected by the City of Prescott

By:

(ENGINEER)

11/30/2012
Date

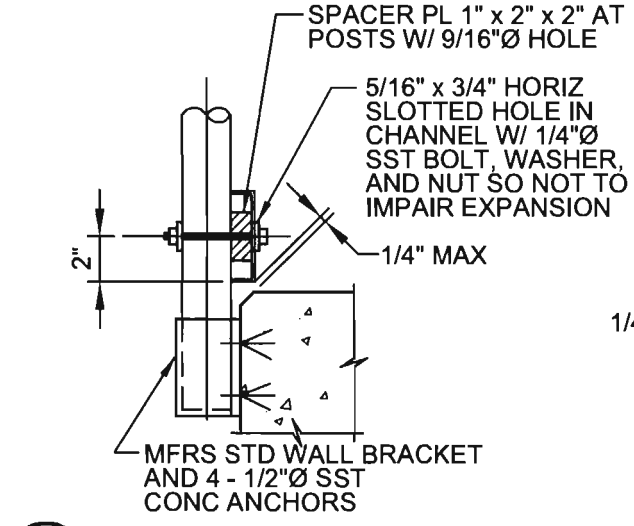

A SIDE MOUNTED POST

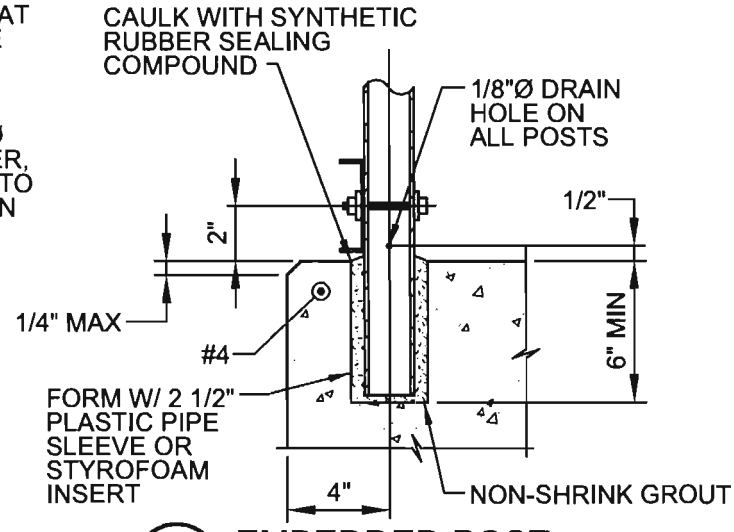

B EMBEDDED POST

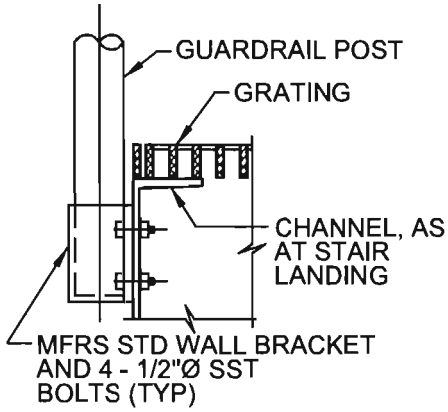

C CHANNEL MOUNTED POST

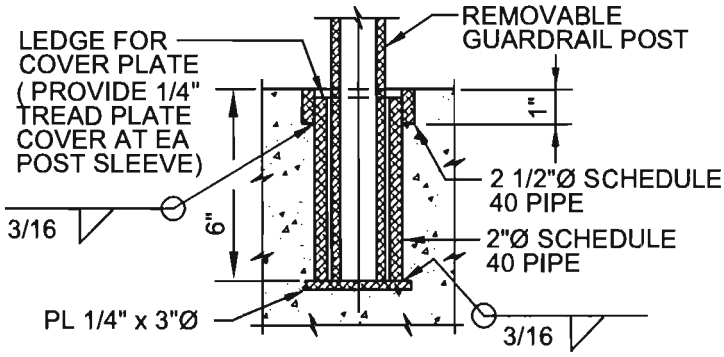

D EMBEDDED POST REMOVABLE

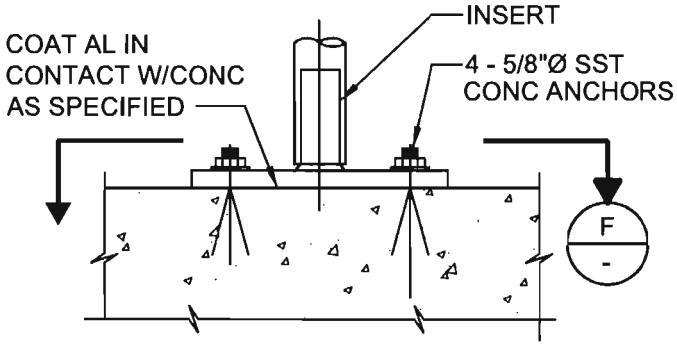

E TOP MOUNTED POST

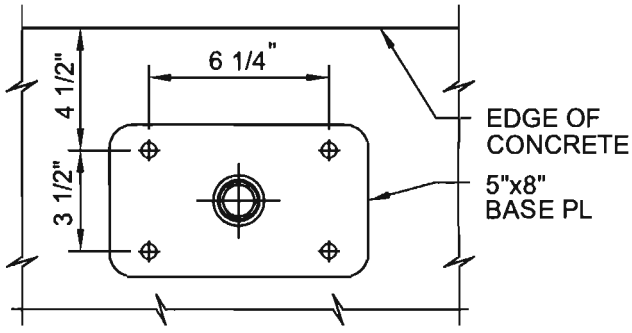

F PLAN

A347 TYP

GUARDRAIL DETAILS

NS

SHEET 1 OF 2

08/01/05

carollo

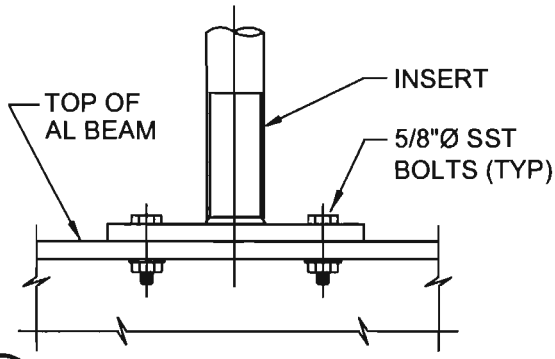

G BEAM MOUNTED POST

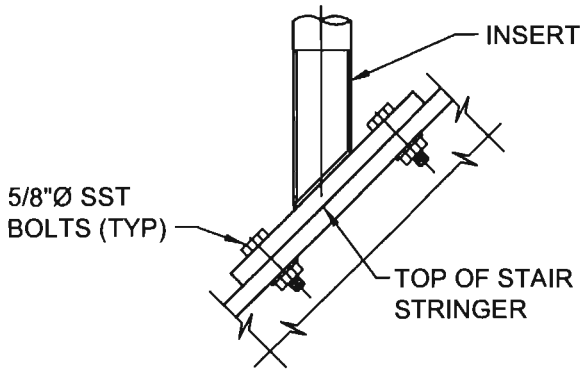

H STRINGER MOUNTED POST

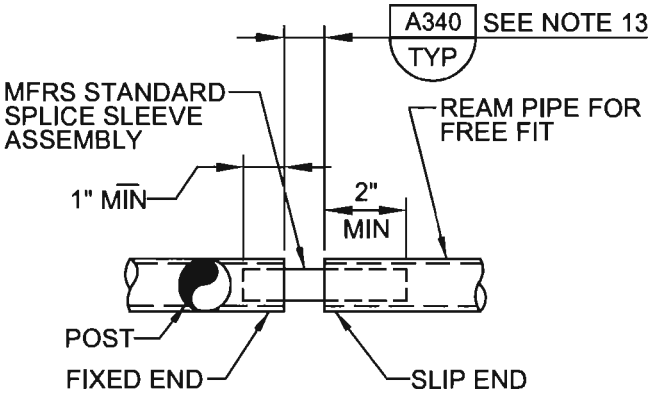

J RAIL SLIP JOINT - PLAN

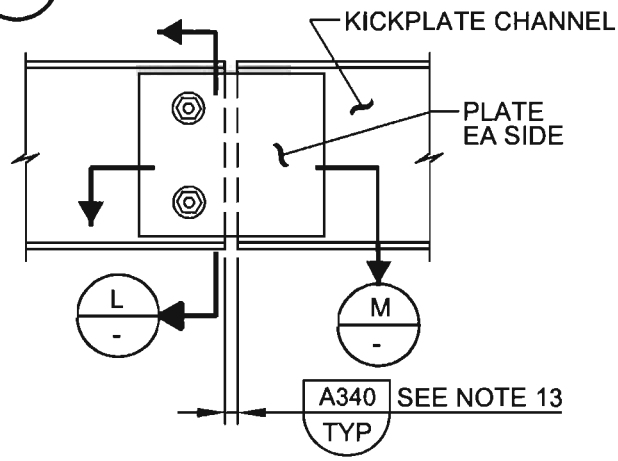

K KICKPLATE JOINT - ELEVATION

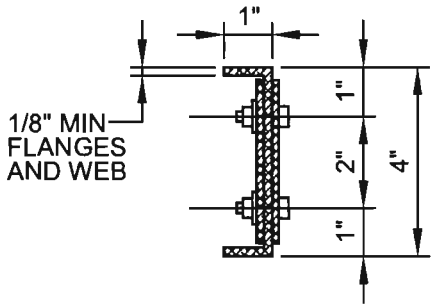

L - KICKPLATE JOINT - SECTION

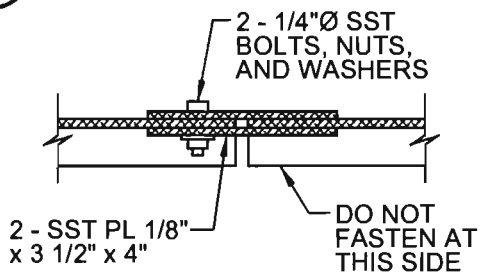

M - KICKPLATE JOINT - PLAN

NOTES:

1. FOR ADDITIONAL REQUIREMENTS, SEE A340 TYP.
2. SEE DRAWINGS FOR MATERIAL TYPES.
3. COAT ALUMINUM SURFACES IN CONTACT WITH CONC OR DISSIMILAR METALS AS SPECIFIED.

A347 TYP GUARDRAIL DETAILS

NS

08/01/05

carollo

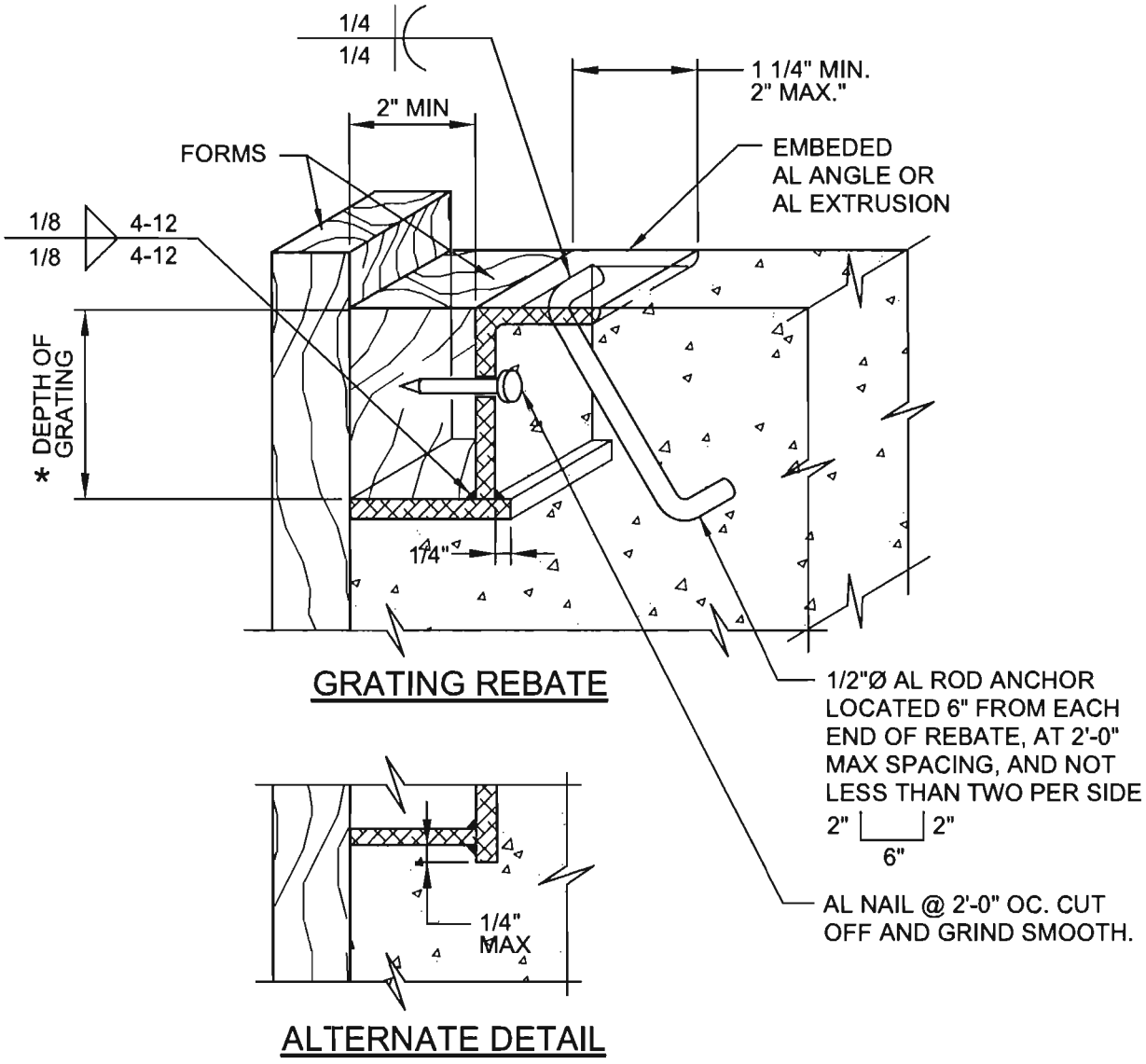

NOTES:

1. FOR AL GRATING, SEE SPECIFICATIONS.
2. REBATE ANGLE SHALL BE CONTINUOUS AROUND ENTIRE OPENING.
3. ANGLE AND BEARING PLATE SHALL BE 1/4" MIN THICK.
4. REBATE MAY BE EXTRUDED, SUBJECT TO ENGINEER'S ACCEPTANCE.
5. COAT ALL ALUMINUM IN CONTACT WITH CONCRETE AS SPECIFIED.
6. * = DIMENSION AS REQUIRED BY GRATING MANUFACTURER.

A400 TYP S

ALUMINUM GRATING REBATE AND SEAT

SHEET 1 OF 2

07/31/08

carollo

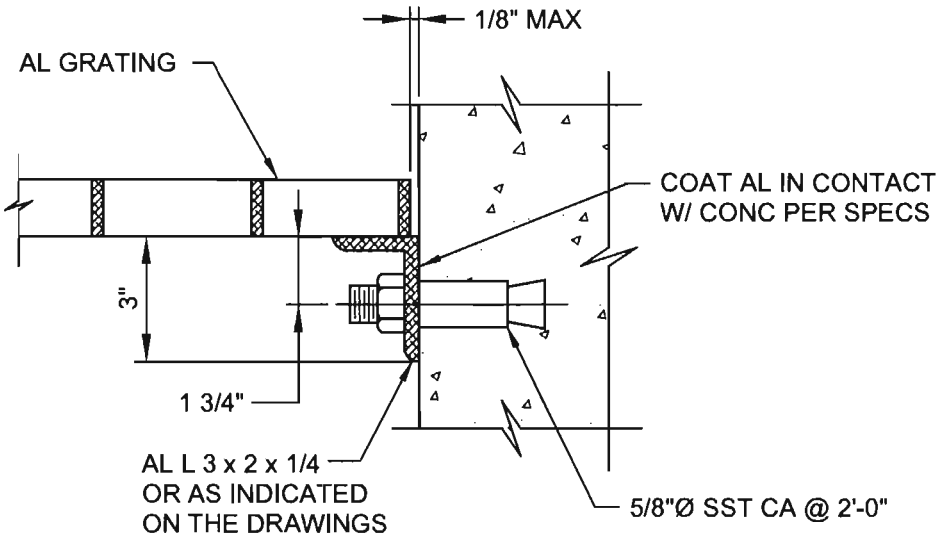

GRATING SEAT

A400 TYP S

ALUMINUM GRATING REBATE AND SEAT

SHEET 2 OF 2

07/31/08

carollo