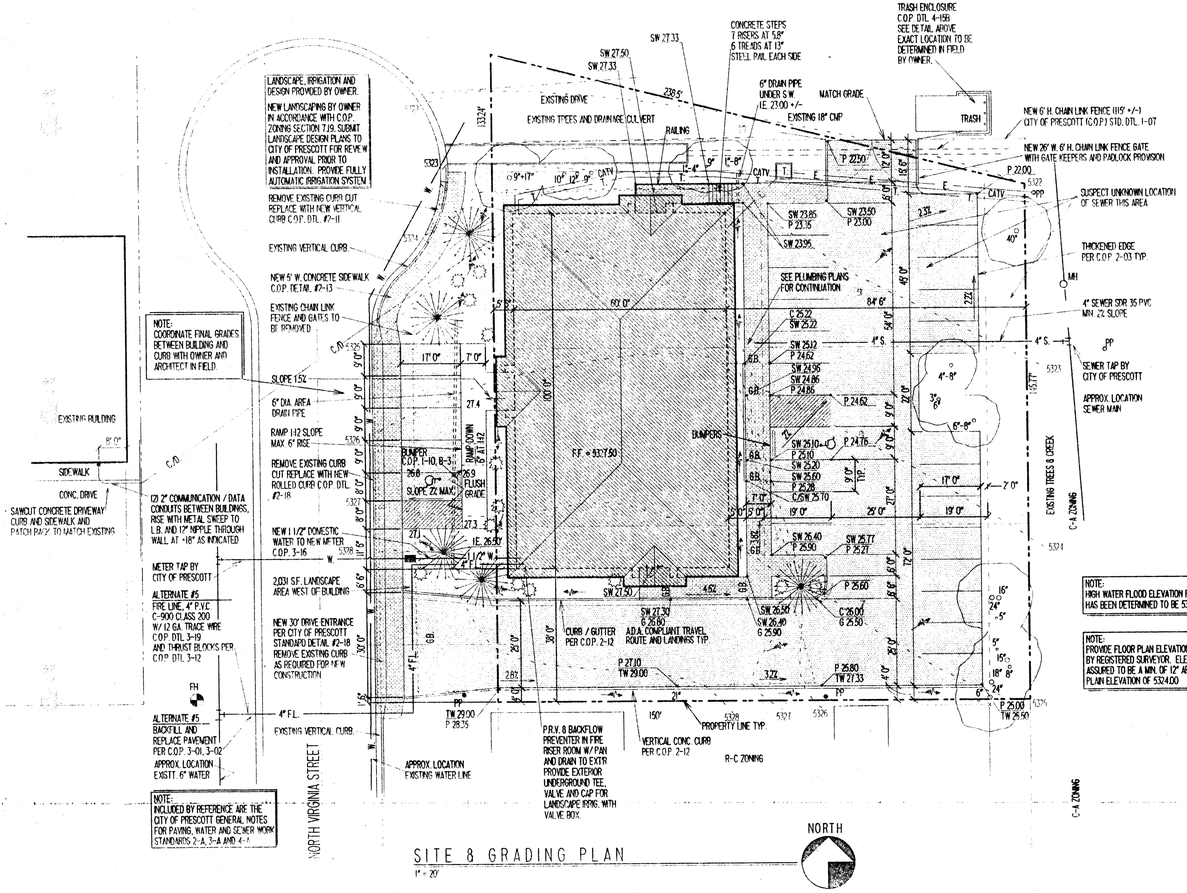

SITE & GRADING PLAN

1" = 20'

NOTE: HIGH WATER FLOOD ELEVATION FOR THIS SITE HAS BEEN DETERMINED TO BE 5324.00

NOTE: PROVIDE FLOOR PLAN ELEVATION CERTIFICATION BY REGISTERED SURVEYOR. ELEVATION TO BE ASSURED TO BE A MIN. OF 12" ABOVE FLOOD PLAN ELEVATION OF 5324.00

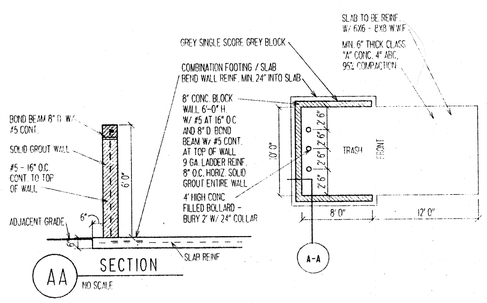

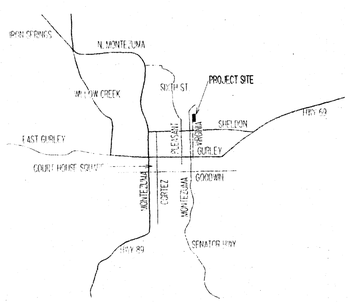

KEY PLAN

NO SCALE

SCHEDULE OF DRAWINGS:

A-1 SITE PLAN
A-2 FLOOR PLAN
A-3 CEILING PLAN, DOOR AND FINISH SCHEDULES AND INTERIOR ELEVATIONS
A-4 BUILDING ELEVATIONS
A-5 BUILDING SECTIONS

S-1 GENERAL, STRUCTURAL NOTES AND DETAILS
S-2 FOUNDATION PLAN AND DETAILS
S-3 ROOF FRAMING PLAN AND DETAILS

M-1 MECHANICAL FLOOR PLAN
MP-1 MECHANICAL SCHEDULES AND DETAILS

P-1 PLUMBING PLAN, SCHEDULES AND SYMBOLS
P-2 PLUMBING ISOMETRICS AND DETAILS

E-1 ELECTRICAL LIGHTING PLAN
E-2 ELECTRICAL POWER PLAN
E-3 ELECTRICAL DIAGRAMS, SCHEDULES AND SYMBOLS

FIRE ALARM / SPRINKLER SYSTEM: (ALTERNATE #5)

AUTOMATIC FIRE SPRINKLER SYSTEM NOTES:
FIRE SPRINKLER SYSTEM SHALL BE DESIGNED IN ACCORDANCE WITH REQUIREMENTS OF NFPA, AND CITY OF PRESCOTT FIRE DEPT. SYSTEM DESIGNER SHALL VERIFY OCCUPANCY AND HAZARDS WITH ARCHITECT PRIOR TO DESIGN OF SYSTEM. FIRE SPRINKLER SUBCONTRACTOR SHALL SUBMIT AND OBTAIN APPROVAL OF SHOP DRAWINGS OF SYSTEM DESIGN AND CALCULATIONS TO FIRE DEPARTMENT FOR APPROVAL PRIOR TO INSTALLATION OF SYSTEM. SYSTEM SHALL INCLUDE INTERFACE WITH FIRE ALARM SYSTEM AND AUTODIALER. SYSTEM SHALL BE INSTALLED AND APPROVED PRIOR TO OCCUPANCY.
IF ALTERNATE #5 IS ACCEPTED THE AUTOMATIC FIRE SPRINKLER SYSTEM SHALL BE OMITTED. REQUIREMENTS FOR THE FIRE ALARM SYSTEM SHALL THEN NEED TO BE INCREASED TO INCLUDE SMOKE DETECTORS IN ALL SPACES IN ACCORDANCE WITH UL, NFPA AND CITY OF PRESCOTT FIRE DEPT. REQUIREMENTS. COSTS FOR THIS UPGRADE SHALL BE ACCOMMODATED IN THE ALTERNATE PRICING.

BUILDING DATA:

PROJECT DESCRIPTION:	PUBLIC WORKS / ENVIRONMENTAL SERVICES BUILDING
PROJECT ADDRESS:	433 N. VIRGINIA STREET, PRESCOTT, AZ
OWNER:	CITY OF PRESCOTT PO BOX 2059 PRESCOTT, AZ 86302
ARCHITECT:	BAUMRUK ARCHITECTURE INC. 111 PARK AVENUE PRESCOTT, AZ 86303 CONTACT PERSON: BRUCE BAUMRUK (520) 445-6920
BUILDING AREA:	6,000 S.F.
OCCUPANCY:	B
CONSTRUCTION TYPE:	V-N W/ AUTO. FIRE SPRINKLER
BUILDING HEIGHT:	19'-0"
ZONING:	I-A
LOT COVERAGE:	24.3 %
LOT AREA (NET):	24,676 S.F.
LEGAL DESCRIPTION:	LOTS 10, 9, 8 & 7 OF BLOCK 1, MOELLER ADDITION PARKING REQUIRED: 20 SPACES PARKING PROVIDED: 28 SPACES

REGISTERED ARCHITECT
CERTIFICATE NO. 17600
BRUCE J. BAUMRUK
Date Signed 10-99
ARIZONA U.S.A.

BAI JOB NO.	9838
DRAWN BY:	BJB
CHECKED BY	BJB
SCALE:	AS NOTED
DATE:	12-31-98
REVISED:	BY:
1-10-99 ISSUED FOR BID	BJB

ENGINEERING / ENVIRONMENTAL SERVICES BUILDING

CITY OF PRESCOTT

433 N. VIRGINIA STREET PRESCOTT, ARIZONA

A-1

BAUMRUK ARCHITECTURE INC.
111 PARK AVENUE
PRESCOTT, ARIZONA
(520) 445-6920 TEL
(520) 445-6921 FAX

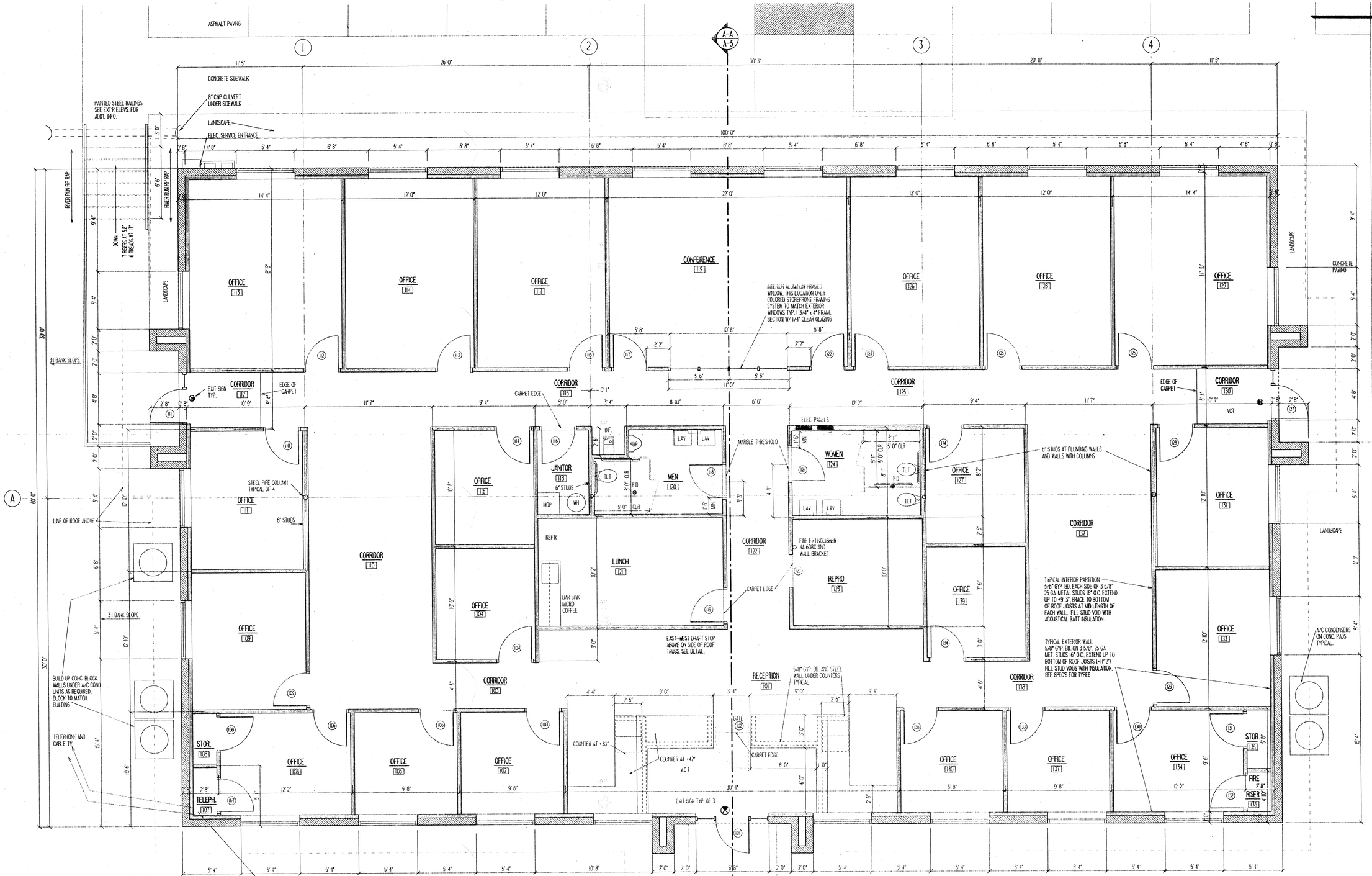

FLOOR PLAN
1/4" = 1'-0"

NORTH

NOTE: ALTERNATE #5
DELETE AUTOMATIC FIRE SPRINKLER SYSTEM AND RELATED CONSTRUCTION WITH ACCEPTANCE OF ALTERNATE #5
DELETE ROOMS 131, STORAGE, 136 FIRE RISER, DOORS 131 AND 132; ROOM FINISHED SHEDULED FOR ROOM 134 OFFICE SHALL EXTEND INTO AREA OF DELETED ROOMS

REGISTERED ARCHITECT CERTIFICATE NO. 17600 BRUCE J. BAUMRUK Date Signed 10-8-99 ARIZONA U.S.A.

BAI JOB NO.	9838
DRAWN BY:	BJB
CHECKED BY	BMB
SCALE:	AS NOTED
DATE:	12-31-98
REVISED:	BY:
1-10-99 ISSUED FOR BID	BD

ENGINEERING / ENVIRONMENTAL SERVICES BUILDING

CITY OF PRESCOTT

NORTH VIRGINIA STREET PRESCOTT, ARIZONA

A-2

BAUMRUK ARCHITECTURE INC.
111 PARK AVENUE
PRESCOTT, ARIZONA
(520) 445-6920 TEL
(520) 445-6921 FAX

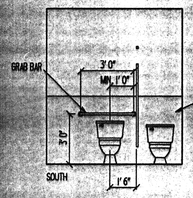

WOMEN #124

1/4" = 1'0"

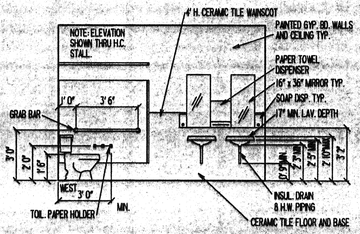

WOMEN #124

1/4" = 1'0"

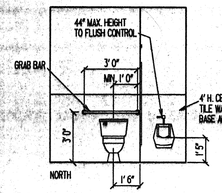

MEN #120

1/4" = 1'0"

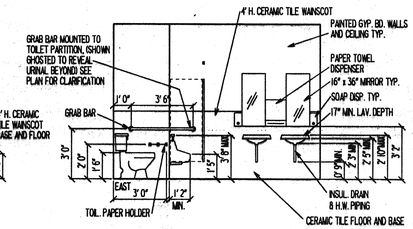

MEN #120

1/4" = 1'0"

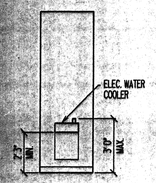

DRINKING FOUNTAIN

1/4" = 1'0"

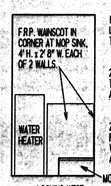

JANITORIAL

1/4" = 1'0"

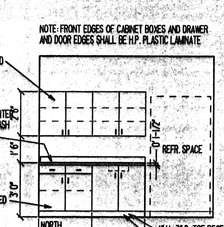

LUNCH #121

1/4" = 1'0"

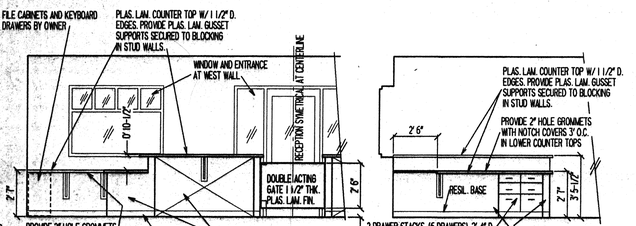

RECEPTION #101

1/4" = 1'0" SEE PLAN, TWO SIMILAR COUNTERS, ONE OPPOSITE HAND

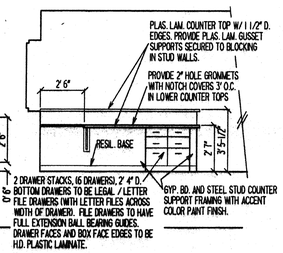

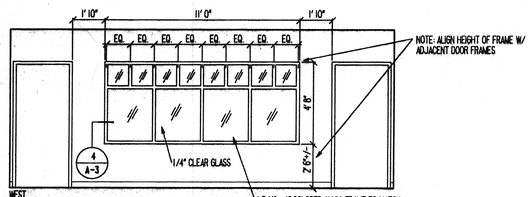

CONFERENCE #119

1/4" = 1'0"

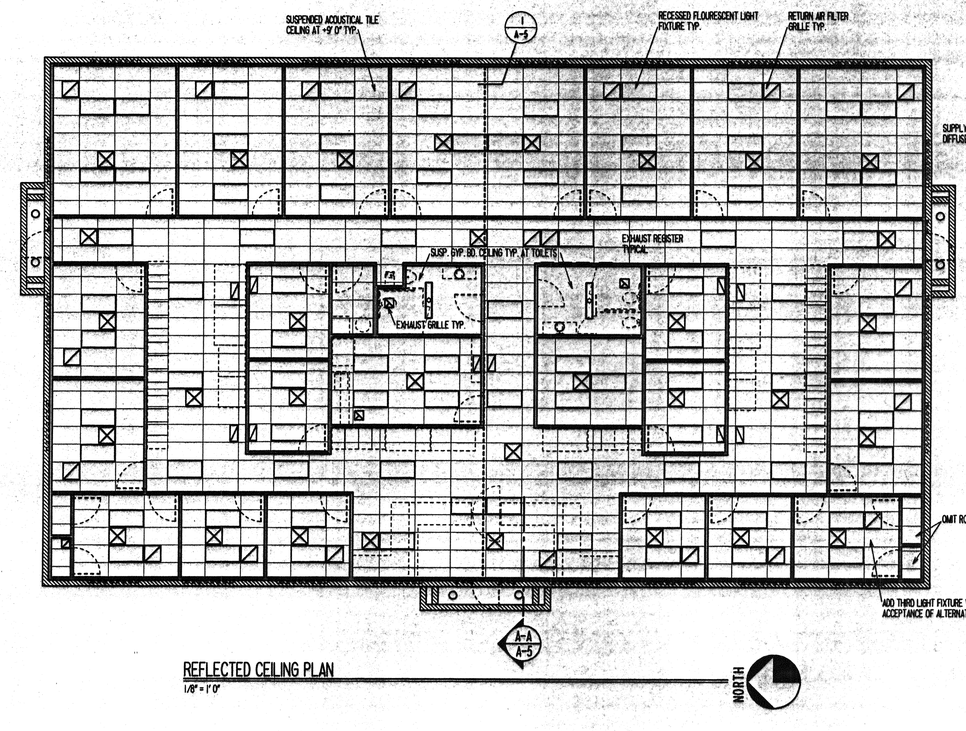

REFLECTED CEILING PLAN

1/8" = 1'0"

REGISTERED ARCHITECT
17600
BRUCE J. BAUMRUK
ARIZONA U.S.A.

BAI JOB NO. 9838
DRAWN BY: BJB
CHECKED BY: BJB
SCALE: AS NOTED
DATE: 12-31-98
REVISED: BY:
1-10-99 ISSUED FOR BID BJB

ROOM FINISH SCHEDULE

ROOM	ROOM NAME	FLOOR: CARPET	FLOOR: VCT	FLOOR: CERAMIC TILE	FLOOR: CONCRETE	BASE: RESILIENT - 4"	BASE: CERAMIC TILE	WALLS: PAINTED GYP. BD. - LATEX ENAMEL EGGSHELL	WALLS: PAINTED GYP. BD. LATEX ENAMEL SEMI-GLOSS	WALLS: CERAMIC TILE - WAINSCOTT	CEILING: 2'X 4' ACOUSTIC CEILING	CEILING: PAINTED GYP. BD. - LATEX ENAMEL SEMI-GLOSS	CEILING HEIGHT	REMARKS
101	RECEPTION	●	●			●		●			●		9'-0"	
102	OFFICE	●				●		●			●		9'-0"	
103	CORRIDOR	●				●		●			●		9'-0"	
104	OFFICE	●				●		●			●		9'-0"	
105	OFFICE	●				●		●			●		9'-0"	
106	OFFICE	●				●		●			●		9'-0"	
107	TELEPHONE	●				●		●			●		9'-0"	
108	STORAGE	●				●		●			●		9'-0"	
109	OFFICE	●				●		●			●		9'-0"	
110	CORRIDOR	●				●		●			●		9'-0"	
111	OFFICE	●				●		●			●		9'-0"	
112	CORRIDOR	●	●			●		●			●		9'-0"	
113	OFFICE	●				●		●			●		9'-0"	
114	OFFICE	●				●		●			●		9'-0"	
115	CORRIDOR	●				●		●			●		9'-0"	
116	OFFICE	●				●		●			●		9'-0"	
117	OFFICE	●				●		●			●		9'-0"	
118	JANITOR		●			●			●				9'-0"	
119	CONFERENCE	●				●		●			●		9'-0"	
120	MEN			●			●		●	✕		●	9'-0"	
121	LUNCH		●			●			●		●		9'-0"	
122	CORRIDOR	●				●		●			●		9'-0"	
123	REPRODUCTIONS		●			●		●			●		9'-0"	
124	WOMEN			●			●		●	✕		●	9'-0"	
125	CORRIDOR	●				●		●			●		9'-0"	
126	OFFICE	●				●		●			●		9'-0"	
127	OFFICE	●				●		●			●		9'-0"	
128	OFFICE	●				●		●			●		9'-0"	
129	OFFICE	●				●		●			●		9'-0"	
130	CORRIDOR	●	●			●		●			●		9'-0"	
131	OFFICE	●				●		●			●		9'-0"	
132	CORRIDOR	●				●		●			●		9'-0"	
133	OFFICE	●				●		●			●		9'-0"	
134	OFFICE	●				●		●			●		9'-0"	EXTEND ROOM LENGHT FOR ALT. #5
135	STORAGE	●				●		●			●		9'-0"	OMIT FOR ALTERNATE #5
136	FIRE RISER				●			●			●		9'-0"	OMIT FOR ALTERNATE #5
137	OFFICE	●				●		●			●		9'-0"	
138	CORRIDOR	●				●		●			●		9'-0"	
139	OFFICE	●				●		●			●		9'-0"	
140	OFFICE	●				●		●			●		9'-0"	

SELECTED WALLS: EAST WALL, SOUTH WALL, NORTH WALL, WEST WALL

ALL WALLS OR ENTIRE ROOM

WALLS AND FINISH NOTES:

ALL EXTERIOR MASONRY SHALL RECEIVE A SILANE BASED SEALER.
ALL EXTERIOR METAL SHALL RECEIVE A PAINT FINISH

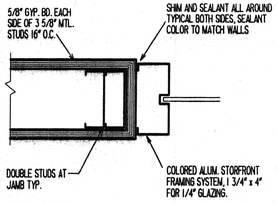

4 WINDOW JAMB

3" = 1'-0"

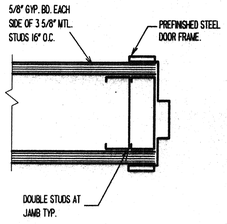

3 DOOR JAMB

3" = 1'-0" DJAMB114

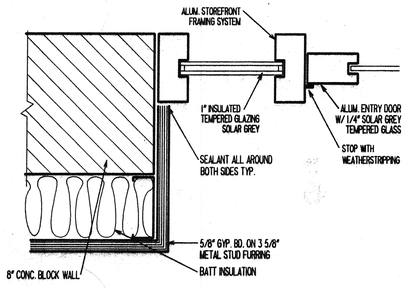

2 DOOR JAMB

3"=1'-0" DJAMB194

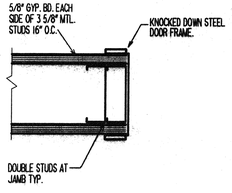

1 DOOR JAMB

3" = 1'-0" DJAMB114

DOOR SCHEDULE

DOOR NO.	TYPE	DOOR SIZE: WIDTH	DOOR SIZE: HEIGHT	DOOR SIZE: THICK.	MATERIAL	CORE	FRAME: MATERIAL	DETAILS	REMARKS	HDWE SET #
101	B	3'-0"	7'-2"	1 3/4"	ALUM.	-	ALUM.	2	1/4" GREY TEMPERED	HW-1
102	C	3'-7" +/-	2'-6"	1 1/2"	PLAS. LAM.	SOLID			MILLWORK	HW-4
103	A	3'-0"	7'-0"	1 3/4"	WOOD	SOLID	HOL. MTL.	3		HW-2
104	A	3'-0"	7'-0"	1 3/4"	WOOD	SOLID	HOL. MTL.	3		HW-2
105	A	3'-0"	7'-0"	1 3/4"	WOOD	SOLID	HOL. MTL.	3		HW-2
106	A	3'-0"	7'-0"	1 3/4"	WOOD	SOLID	HOL. MTL.	3		HW-2
107	A	3'-0"	7'-0"	1 3/4"	WOOD	SOLID	HOL. MTL.	3		HW-5
108	A	3'-0"	7'-0"	1 3/4"	WOOD	SOLID	HOL. MTL.	3		HW-5
109	A	3'-0"	7'-0"	1 3/4"	WOOD	SOLID	HOL. MTL.	3		HW-2
110	A	3'-0"	7'-0"	1 3/4"	WOOD	SOLID	HOL. MTL.	3		HW-2
111	B	3'-0"	7'-2"	1 3/4"	ALUM.	-	ALUM.	2	1/4" GREY TEMPERED	HW-1
112	A	3'-0"	7'-0"	1 3/4"	WOOD	SOLID	HOL. MTL.	3		HW-2
113	A	3'-0"	7'-0"	1 3/4"	WOOD	SOLID	HOL. MTL.	3		HW-2
114	A	3'-0"	7'-0"	1 3/4"	WOOD	SOLID	HOL. MTL.	3		HW-2
115	A	3'-0"	7'-0"	1 3/4"	WOOD	SOLID	HOL. MTL.	3		HW-2
116	A	3'-0"	7'-0"	1 3/4"	WOOD	SOLID	HOL. MTL.	3		HW-5
117	A	3'-0"	7'-0"	1 3/4"	WOOD	SOLID	HOL. MTL.	3		HW-3
118	A	3'-0"	7'-0"	1 3/4"	WOOD	SOLID	HOL. MTL.	3		HW-6
119	A	3'-0"	7'-0"	1 3/4"	WOOD	SOLID	HOL. MTL.	3		HW-3
120		3'-0"	7'-0"					1	NO DOOR	
121	A	3'-0"	7'-0"	1 3/4"	WOOD	SOLID	HOL. MTL.	3		HW-6
122	A	3'-0"	7'-0"	1 3/4"	WOOD	SOLID	HOL. MTL.	3		HW-3
123	A	3'-0"	7'-0"	1 3/4"	WOOD	SOLID	HOL. MTL.	3		HW-2
124	A	3'-0"	7'-0"	1 3/4"	WOOD	SOLID	HOL. MTL.	3		HW-2
125	A	3'-0"	7'-0"	1 3/4"	WOOD	SOLID	HOL. MTL.	3		HW-2
126	A	3'-0"	7'-0"	1 3/4"	WOOD	SOLID	HOL. MTL.	3		HW-2
127	B	3'-0"	7'-2"	1 3/4"	ALUM.	-	ALUM.	2	1/4" GREY TEMPERED	HW-1
128	A	3'-0"	7'-0"	1 3/4"	WOOD	SOLID	HOL. MTL.	3		HW-2
129	A	3'-0"	7'-0"	1 3/4"	WOOD	SOLID	HOL. MTL.	3		HW-2
130	A	3'-0"	7'-0"	1 3/4"	WOOD	SOLID	HOL. MTL.	3		HW-2
131	A	3'-0"	7'-0"	1 3/4"	WOOD	SOLID	HOL. MTL.	3	OMIT FOR ALTERNATE #5	HW-5
132	A	3'-0"	7'-0"	1 3/4"	WOOD	SOLID	HOL. MTL.	3	OMIT FOR ALTERNATE #5	HW-5
133	A	3'-0"	7'-0"	1 3/4"	WOOD	SOLID	HOL. MTL.	3		HW-2
134	A	3'-0"	7'-0"	1 3/4"	WOOD	SOLID	HOL. MTL.	3		HW-2
135	A	3'-0"	7'-0"	1 3/4"	WOOD	SOLID	HOL. MTL.	3		HW-2

HARDWARE SETS

ALL EXIT DOORS SHALL BE OPENABLE FROM THE INSIDE WITHOUT THE USE OF A KEY OR ANY SPECIAL KNOWLEDGE OR EFFORT. REF.: (1994 U.B.C. SEC. 1004.3)

DOORS SHALL HAVE LEVER HANDLES AND HARDWARE AND SHALL CONFORM WITH ANSI STD. A117.1-1986 & A.D.A. REQUIREMENTS

SEE SPECIFICATION SECTION 08710 FOR HARDWARE SETS INFO. LIST BELOW IS FOR FUNCTIONAL SUMMARY ONLY

HW-1: EXIT DEVICE, CLOSER
HW-2: LEVER LOCKSET
HW-3: LEVER PASSAGE LATCH
HW-4: DOUBLE ACTING PIVOT
HW-5: LEVER LOCKSET
HW-6: PUSH, PULL, CLOSER

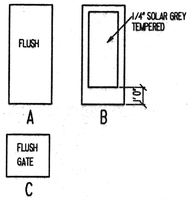

DOOR TYPES

ENGINEERING / ENVIRONMENTAL SERVICES BUILDING

CITY OF PRESCOTT

NORTH VIRGINIA STREET PRESCOTT, ARIZONA

A-3

BAUMRUK ARCHITECTURE INC.
111 PARK AVENUE
PRESCOTT, ARIZONA
(520) 445-6920 TEL
(520) 445-6921 FAX

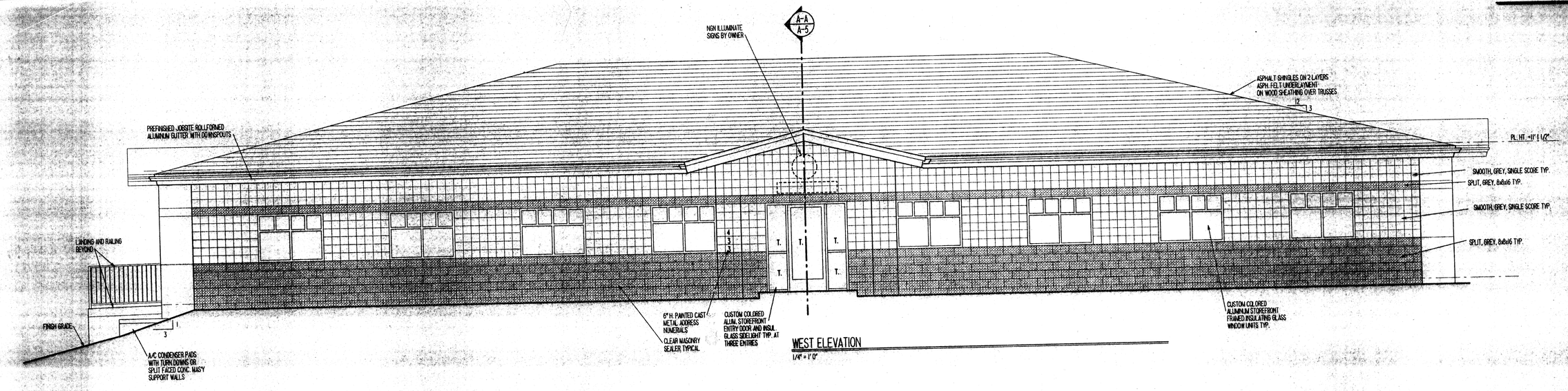

WEST ELEVATION
1/4" = 1' 0"

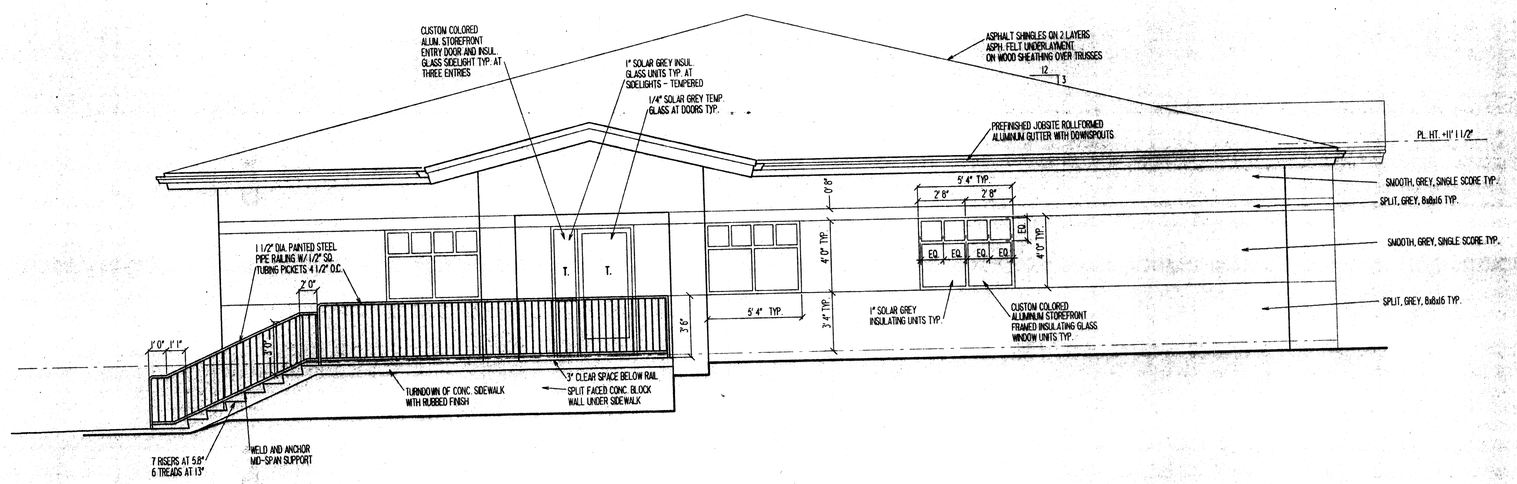

NORTH ELEVATION
1/4" = 1' 0"

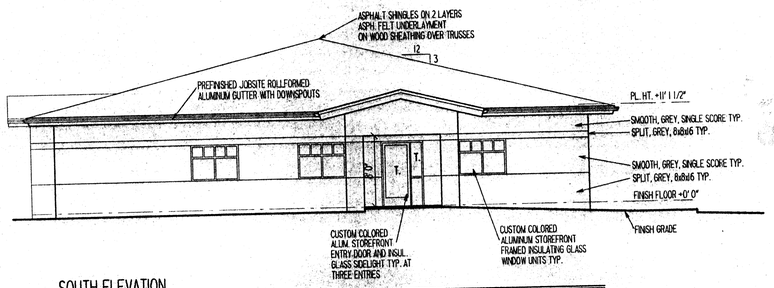

SOUTH ELEVATION
1/8" = 1' 0"

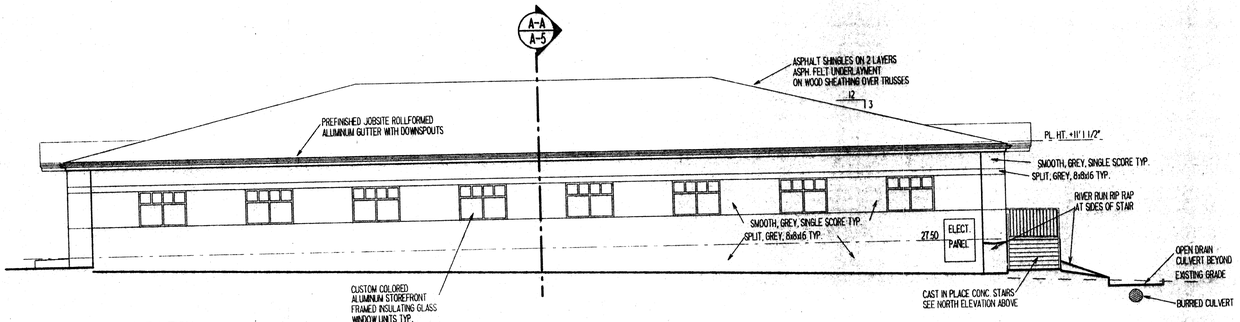

EAST ELEVATION
1/8" = 1' 0"

REGISTERED ARCHITECT
CERTIFICATE NO. 17608
BRUCE E. BAUMRUK
ARIZONA, U.S.A.

BAI JOB NO. 9834
DRAWN BY: B.J.B.
CHECKED BY: B.J.B.
SCALE: AS NOTED
DATE: 12-31-98
REVISED: BY:

ENGINEERING / ENVIRONMENTAL SERVICES BUILDING

CITY OF PRESCOTT
433 N. VIRGINIA STREET PRESCOTT, ARIZONA

A-4

BAUMRUK ARCHITECTURE INC.
111 PARK AVENUE
PRESCOTT, ARIZONA
(520) 445-6920 TEL
(520) 445-6921 FAX

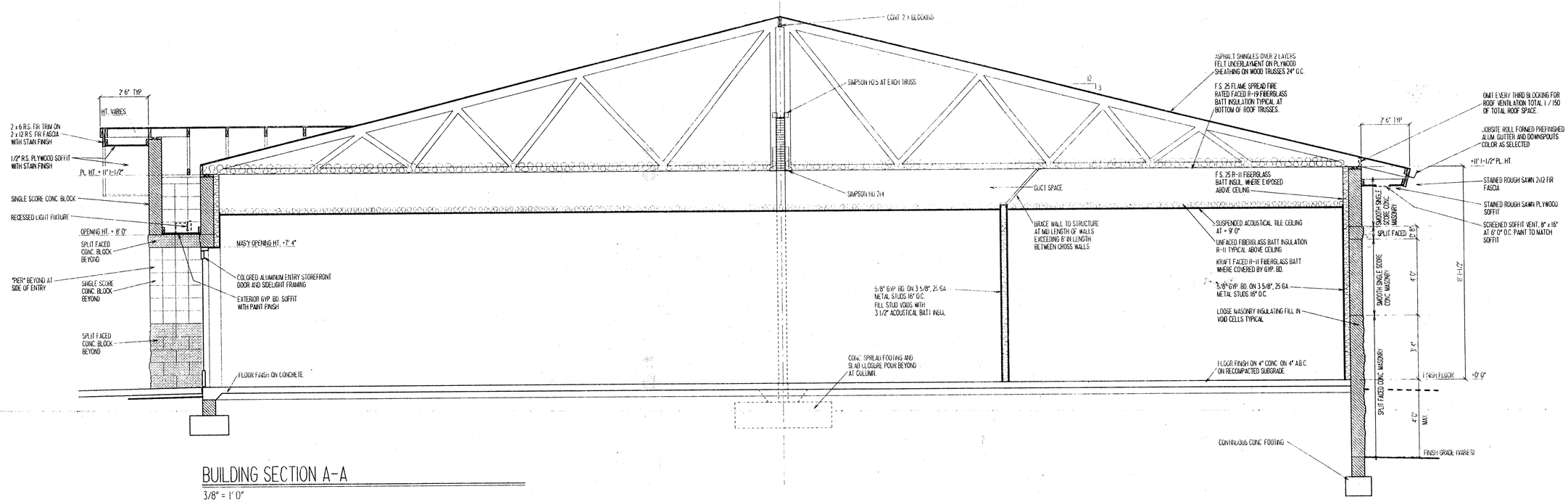

BUILDING SECTION A-A

3/8" = 1' 0"

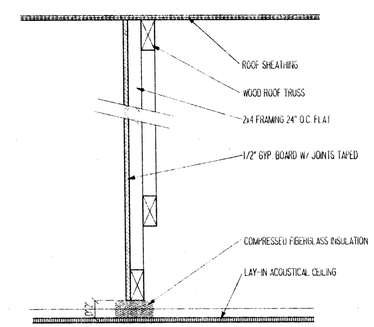

1 DRAFTSTOP

NO SCALE

REGISTERED ARCHITECT
CERTIFICATE NO. 17600
BRUCE J. BAUMRUK
EXP. 12-31-99
ARIZONA, U.S.A.

BAI JOB NO:	9638
DRAWN BY:	BJB
CHECKED BY	BJB
SCALE:	AS NOTED
DATE:	12-31-98
REVISED:	BY:

△

ENGINEERING / ENVIRONMENTAL SERVICES BUILDING

CITY OF PRESCOTT

433 N. VIRGINIA STREET, PRESCOTT, ARIZONA

A-5

BAUMRUK ARCHITECTURE INC.
111 PARK AVENUE
PRESCOTT, ARIZONA
(520) 445-6920 TEL
(520) 445-6921 FAX

GENERAL STRUCTURAL NOTES:

BUILDING CODE:
1997 EDITION OF THE UNIFORM BUILDING CODE.
NOTE:
1997 U.B.C. EFFECTIVE 1-1-99 IMPORTANCE FACTOR FOR CITY BLDG.
ESSENTIAL FACILTY.

LOADS:
ROOF LIVE LOAD = 30 PSF (REDUCIBLE).
SUPERIMPOSED DEAD LOAD ON ROOF TRUSSES = 16 PSF. (EXCLUDES TRUSS WEIGHT)
(8 PSF TOP CHORD / 8 PSF BOTTOM CHORD)
ROOF DEAD LOAD = 18 PSF.
TRUSS SHALL BE DESIGNED FOR WITH A SUPERIMPOSED FUTURE MECHANICAL LOAD OF 200 LB AT ANY LOCATION.
WIND LOAD = 70 MPH WIND SPEED, EXPOSURE C.
SEISMIC ZONE 2B (Z = 0.20)

SPECIAL INSPECTION - STRUCTURAL ONLY
SPECIAL INSPECTION IS TO BE PROVIDED FOR THE ITEMS LISTED BELOW IN ADDITION TO THE INSPECTIONS CONDUCTED BY THE BUILDING SAFETY DEPARTMENT. "SPECIAL STRUCTURAL INSPECTION" SHALL NOT RELIEVE THE OWNER OR THEIR AGENT FROM REQUESTING THE CITY OR COUNTY INSPECTIONS REQUIRED BY SEC. 305(E) AND 305(F) OF THE UNIFORM BLDG. CODE. SPECIAL INSPECTION IS REQUIRED PER 306 FOR THE FOLLOWING:

1. WELDING:
A. VISUAL INSPECTION OF ALL FIELD WELDS.
B. NON-DESTRUCTIVE TESTING OF ALL COMPLETE PENETRATION WELDS.

2. DUTIES AND RESPONSIBILITIES OF THE SPECIAL INSPECTOR:
A. THE SPECIAL INSPECTOR SHALL OBSERVE THE WORK ASSIGNED TO BE CERTAIN IT CONFORMS WITH THE APPROVED DESIGN DRAWINGS AND SPECIFICATION.
B. THE SPECIAL INSPECTOR SHALL FURNISH INSPECTION REPORTS TO THE BUILDING OFFICIAL, AND TO THE ENGINEER OR ARCHITECT OF RECORD. ALL DISCREPANCIES SHALL BE BROUGHT TO THE IMMEDIATE ATTENTION OF THE CONTRACTOR FOR CORRECTION, THEN, IF UNCORRECTED, TO THE DESIGN AUTHORITY AND THE BUILDING OFFICIAL.
C. UPON COMPLETION OF THE ASSIGNED WORK THE ENGINEER OR ARCHITECT SHALL COMPLETE AND SIGN THE APPROPRIATE FORMS CERTIFYING THAT TO THE BEST OF THEIR KNOWLEDGE THE WORK IS IN CONFORMANCE WITH THE APPROVED PLANS AND SPECIFICATIONS, AND THE APPLICABLE WORKMANSHIP PROVISIONS OF THE CODE.

FOR ADDITIONAL INFORMATION ON SPECIAL STRUCTURAL INSPECTIONS, CONTACT STRUCTURAL ENGINEER PRIOR TO START OF CONSTRUCTION.

FOUNDATIONS:
SOIL REPORT BY COPELAND GEOTECHNICAL CONSULTANTS, JOB #571.01. SPREAD FOOTINGS SHALL BEAR ON FIRM, UNDISTURBED SOIL 2'-6" MINIMUM BELOW FINISHED GRADE. FINISHED GRADE IS DEFINED AS TOP OF SLAB FOR INTERIOR FOOTINGS AND LOWEST ADJACENT GRADE WITHIN 5 FEET FOR PERIMETER FOOTINGS. DESIGN SOIL BEARING VALUE = 2,000 PSF. REFER TO SOILS REPORT FOR ADDITIONAL INFO. PRIOR TO COMMENCEMENT OF EARTHWORK. SOILS ENGINEER SHALL INSPECT FOUNDATION EXCAVATIONS PRIOR TO PLACEMENT OF CONCRETE.

CONCRETE:
MINIMUM 28 DAY STRENGTH 3,000 PSI EXCEPT AS FOLLOWS:
SLABS ON GRADE------------------------3,000 PSI
FOUNDATIONS---------------------------2,500 PSI
ALL CONCRETE CONSTRUCTION SHALL CONFORM TO A.C.I. MECHANICALLY VIBRATE ALL CONCRETE WHEN PLACED, EXCEPT THOSE SLABS ON GRADE NEED BE VIBRATED ONLY AT TRENCHES. ~~FLOOR DUCTS~~, TURNDOWNS, ETC. MAXIMUM SLUMP 4 1/2" FOR CONCRETE WITHOUT PLASTICIZER. IF PLASTICIZER IS USED, A HIGHER FINAL SLUMP MAY BE ALLOWED UPON STRUCTURAL ENGINEER'S APPROVAL. CAST CLOSURE POUR AROUND COLUMNS AFTER COLUMN DEAD LOAD IS APPLIED. UNLESS APPROVED OTHERWISE IN WRITING BY THE ARCHITECT. ALL CONCRETE SLABS ON GRADE SHALL BE BOUND BY CONTROL JOINTS (KEYED OR SAW CUT), AS SHOWN ON THE FOUNDATION PLAN, SUCH THAT THE ENCLOSED AREA DOES NOT EXCEED 150 SQUARE FEET. KEYED CONTROL JOINTS NEED ONLY OCCUR AT EXPOSED EDGES DURING POURING, ALL OTHER JOINTS MAY BE SAW CUT.
FLY ASH - IF PERMITTED BY ARCHITECTURAL SPECIFICATIONS SHALL BE LIMITED TO 18% OF CEMENTITOUS MATERIALS AND SHALL HAVE A REPLACEMENT FACTOR OF 1.2 RELATIVE TO CEMENT REPLACED. NO FLY ASH ADDITIVES SHALL BE USED IN FLATWORK OF ARCHITECTURALLY EXPOSED CONCRETE.

MASONRY:
HOLLOW CONCRETE MASONRY UNITS SHALL CONFORM TO ASTM C90, GRADE N, TYPE I, F'm = 1,500 PSI, RUNNING BOND, MORTAR TYPE S, 1,800 PSI. GROUT 2,000 PSI. MECHANICALLY VIBRATE GROUT IMMEDIATELY AFTER POURING. PROVIDE CLEANOUTS IF GROUT LIFT EXCEEDS 5'-0" IN BLOCK WALLS. MAXIMUM GROUT LIFT SHALL BE 8'-0". FILL CELLS SOLIDLY WITH GROUT IN LIFTS AND STOP POURS 1 1/2" BELOW THE TOP OF A COURSE TO FORM A KEY A POUR POINTS. UNLESS NOTED OTHERWISE ON THE PLANS, PLACE CONTROL JOINTS IN MASONRY WALLS SUCH THAT NO STRAIGHT RUNS OF WALL EXCEEDS 24'-0". CONTROL JOINTS SHALL NOT OCCUR AT WALL CORNERS, INTERSECTIONS, ENDS, WITHIN 24" OF CONCENTRATED POINTS OF BEARING OR JAMBS, OR OVER OPENINGS UNLESS SPECIFICALLY SHOWN ON THE STRUCTURAL DRAWINGS. ALL MASONRY BELOW FINISH FLOOR OR GRADE SHALL BE GROUTED SOLID.

VERTICAL MASONRY REINFORCING:
1 #5 IN CENTER OF GROUT AT CENTER OF WALL, CONTINUOUS FULL HEIGHT OF WALL AT ALL CORNERS, INTERSECTIONS, WALL ENDS, BEAM BEARINGS, JAMBS, EACH SIDE OF CONTROL JOINTS AND AT INTERVALS NOT TO EXCEED 48" O.C. UNLESS NOTED OTHERWISE. TIE AT 8'-0" VERTICALLY, WITH SINGLE WIRE LOOP TIE BY A.A. WIRE PRODUCTS COMPANY. (OR EQUIVALENT) DOWEL ALL VERTICAL REINFORCING TO FOUNDATION WITH DOWELS TO MATCH VERTICAL REINFORCING.

HORIZONTAL MASONRY REINFORCING:
2 #5 IN MINIMUM 8" DEEP GROUTED CONTINUOUS BOND BEAM AT ROOF LINE. 1 #5 IN MINIMUM 8" DEEP GROUTED CONTINUOUS BOND BEAM AT TOP OF ~~PARAPET OR TOP OF~~ A FREESTANDING WALL. PLACE THESE BARS CONTINUOUS THRU CONTROL JOINTS PER TYPICAL DETAIL. PROVIDE BENT BARS PER TYPICAL DETAILS, TO MATCH HORIZONTAL BOND BEAM REINFORCING AT CORNERS AND WALL INTERSECTION TO MAINTAIN BOND BEAM CONTINUITY. STANDARD WEIGHT (NO. 9 GAGE WIRE) DUR-O-WAL OR DUR-O-WIRE (OR EQUIVALENT) LADDER TYPE JOINT REINFORCEMENT AT 16" O.C. IN MASONRY WALLS.

LAP SPLICES OF MASONRY REINF.:
LAP SPLICES SHALL BE 40 BAR DIAMETERS FOR GRADE 40 BARS AND 48 BAR DIAMETERS FOR GRADE 60 BARS. STAGGER SPLICES A MINIMUM OF 40 BAR DIAMETERS. WHEN ADJACENT SPLICES (SAME CELL) ARE SEPARATED BY 3 INCHES OR LESS, THE LAP LENGTH SHALL BE INCREASED TO 52 BAR DIAMETERS FOR GRADE 40 BARS AND 62 BAR DIAMETERS FOR GRADE 60 BARS. DO NOT SPLICE WITHIN 8'-0" OF CONTROL JOINTS. LAP HORIZONTAL JOINT REINFORCING 8" MINIMUM.

CONCRETE REINFORCING:
ASTM A615 (Fy = 60 KSI) DEFORMED BARS FOR ALL BARS #5 AND LARGER
ASTM A615 (Fy = 40 KSI) DEFORMED BARS FOR ALL BARS #4 AND SMALLER.
NO TACK WELDING OF REINFORCING BARS ALLOWED WITHOUT PRIOR REVIEW OF PROCEDURE WITH THE STRUCTURAL ENGINEER. LATEST ACI CODE AND DETAILING MANUAL APPLY. CLEAR CONCRETE COVERAGES AS FOLLOWS:
CAST AGAINST AND PERMANENTLY EXPOSED TO EARTH --------------- 3"
EXPOSED TO EARTH OR WEATHER
#6 OR LARGER--- 2"
#5 OR SMALLER --- 1 1/2"
FLAT SLAB -- 3/4"
ALL OTHERS PER LATEST EDITION OF ACI 318.
LAP SPLICES IN CONCRETE
LAP SPLICES, UNLESS NOTED OTHERWISE, SHALL BE CLASS "B" TENSION LAP SPLICES PER LATEST EDITION OF ACI 318. STAGGER SPLICES A MINIMUM OF ONE LAP LENGTH. ALL REINFORCING SHALL BE CHAIRED TO ENSURE PROPER CLEARANCES. SUPPORT OF FOUNDATION REINFORCING MUST PROVIDE ISOLATION FROM MOISTURE/CORROSION.
PROVIDE BENT CORNER BARS TO MATCH AND LAP WITH HORIZONTAL BARS AT ALL CORNERS AND INTERSECTIONS PER TYPICAL DETAILS. REINFORCING BAR SPACING GIVEN ARE MAXIMUM ON CENTERS. ALL BARS PER CRSI SPECIFICATIONS AND HANDBOOK. DOWEL ALL VERTICAL REINFORCING TO FOUNDATION WITH STANDARD 90 DEGREE HOOKS UNLESS NOTED OTHERWISE. SECURELY TIE ALL BARS IN LOCATION BEFORE PLACING CONCRETE.

DRYPACK:
DRYPACK SHALL BE 5,000 PSI NON-SHRINK GROUT, FIVE STAR OR EQUIVALENTS. INSTALL DRYPACK UNDER BEARING PLATES BEFORE FRAMING MEMBER IS INSTALLED. AT COLUMNS, INSTALL DRYPACK UNDER BASE PLATES AFTER COLUMN HAS BEEN PLUMBED BUT PRIOR TO SUPPORTED FRAMING MEMBER(S) BEING INSTALLED.

STRUCTURAL STEEL:
ALL STRUCTURAL STEEL SHALL BE ASTM A36 (Fy = 36 KSI). ALL PIPE STEEL SHALL BE ASTM A501 (Fy = 36 KSI) OR ASTM A53, TYPE E OR S, GRADE B (Fy = 35 KSI). ALL TUBE STEEL SHALL BE ASTM A500 (Fy =46 KSI). ALL BOLTS SHALL BE ASTM A307, UNLESS NOTED OTHERWISE. ALL CONSTRUCTION PER LATEST AISC HANDBOOK. ALL EXPANSIVE ANCHORAGE SHALL BE PER RAMSET/RED HEAD TRUBOLT WEDGE ANCHOR (I.C.B.O ER. 1372) OR APPROVED EQUAL. ALL EPOXY ANCHORAGE SHALL BE PER HILTI 'HY-150' SYSTEM (I.C.B.O. ER. 5193) OR APPROVED EQUAL. ALL BOLTS, ANCHOR BOLTS, EXPANSION BOLTS, ETC., SHALL BE INSTALLED WITH STEEL WASHERS AT FACE OF WOOD OR AT SLOTTED HOLES IN STEEL SECTIONS. ALL WELDING SHALL BE PERFORMED BY WELDERS HOLDING VALID CERTIFICATES AND HAVING CURRENT EXPERIENCE IN THE TYPE OF WELD SHOWN ON THE DRAWINGS OR NOTES. CERTIFICATES SHALL BE THOSE ISSUED BY AN ACCEPTED TESTING AGENCY. ALL WELDING DONE BY E70 SERIES LOW HYDROGEN RODS UNLESS NOTED OTHERWISE. FOR GRADE 60 REINFORCING BARS, USE E90 SERIES. ALL WELDING PER LATEST AMERICAN WELDING SOCIETY STANDARDS. THESE DRAWINGS DO NOT DISTINGUISH BETWEEN SHOP AND FIELD WELDS; THE CONTRACTOR MAY SHOP WELD OR FIELD WELD AT THEIR DISCRETION. SHOP WELDS AND FIELD WELDS SHALL BE SHOWN ON THE SHOP DRAWINGS SUBMITTED FOR REVIEW. ALL FULL (COMPLETE) PENETRATION WELDS SHALL BE TESTED AND CERTIFIED BY AN INDEPENDENT TESTING LABORATORY.

PREFABRICATED WOOD TRUSSES:
PREFABRICATED WOOD TRUSSES SHALL BE DESIGNED TO SUPPORT SELF WEIGHT PLUS LIVE LOAD AND SUPERIMPOSED DEAD LOADS STATED IN THE GENERAL STRUCTURAL NOTES OR AS LOCATED ON PLANS. BRIDGING SIZE AND SPACING BY TRUSS MANUFACTURER UNLESS NOTED OTHERWISE. CONTRACTOR SHALL SUBMIT SHOP DRAWINGS, ERECTION DRAWINGS AND DESIGN CALCULATIONS SEALED BY A REGISTERED ENGINEER FOR REVIEW PRIOR TO MANUFACTURE. CALCULATIONS AND SHOP DRAWINGS SHALL SHOW ANY SPECIAL DETAILS REQUIRED AT BEARING POINTS. ALL CONNECTORS SHALL HAVE CURRENT I.C.B.O. APPROVAL. CALCULATIONS SHALL INCLUDE DEFLECTION AND CAMBER REQUIREMENTS, DEFLECTION SHALL BE LIMITED AS FOLLOWS:
SLOPED ROOF (1/4" OR GREATER PER FOOT) TOTAL LOAD MAXIMUM = L/180, LIVE LOAD MAXIMUM = L/360. TRUSSES SHALL BE CAMBERED FOR 1.5 TIMES THE DEAD LOAD DEFLECTION.
ADDITIONAL TRUSSES SHALL BE SUPPLIED AS REQUIRED TO SUPPORT MECHANICAL EQUIPMENT.
MULTIPLE TRUSS MEMBERS SHALL BE FASTENED TOGETHER TO ALLOW TRANSFER OF SHEAR AND TENSION FORCES (MINIMUM 200 PLF) AT PLYWOOD SHEATHING JOINTS AND TO PREVENT CROSS GRAIN BENDING OF TOP CHORDS. ATTACHMENT SHALL BE A CONTINUOUS 20 GAGE METAL PLATE OR OTHER APPROVED MEANS. METHOD OF ATTACHMENT SHALL BE INDICATED ON SHOP DRAWINGS FOR REVIEW. TRUSS MANUFACTURER SHALL HAVE I.C.BO. APPROVAL OR BE AN APPROVED FABRICATOR ACCORDING TO THE BUILDING JURISDICTION.

WOOD:
SAWN LUMBER:
FRAMING LUMBER SHALL COMPLY WITH THE LATEST EDITION OF THE GRADING RULES OF THE WESTERN WOOD PRODUCTS ASSOCIATION OR THE WEST COAST LUMBER INSPECTION BUREAU. ALL SAWN LUMBER SHALL BE STAMPED WITH THE GRADE MARK OF AN APPROVED LUMBER GRADING AGENCY AND SHALL HAVE THE FOLLOWING UNADJUSTED DESIGN MINIMUM PROPERTIES.

	WOOD TYPE
JOISTS	
2 X 4	DF #2
2 X 6 OR LARGER	DF #2
BEAMS	
WIDTH 4" OR LESS	DF #2
WIDTH GREATER	DF #1
LEDGERS AND TOP PLATES	DF #2
STUDS	
2 X 4	DF #2
2 X 6 OR LARGER	DF #2

GLUED-LAMINATED BEAMS (GLULAM):
GLUED-LAMINATED BEAMS SHALL HAVE THE FOLLOWING MINIMUM PROPERTIES: Fb = 2,400 PSI, Fv = 155 PSI, Fc (PERPENDICULAR) = 650 PSI, E = 1,700,000 PSI. BEAMS CANTILEVERING OVER SUPPORTS SHALL HAVE THE SPECIFIED MINIMUM PROPERTIES TOP AND BOTTOM. ALL BEAMS SHALL BE FABRICATED USING WATERPROOF GLUE. FABRICATION AND HANDLING PER LATEST AITC AND WCLA STANDARDS. BEAMS TO BEAR GRADE STAMP AND AITC STAMP AND CERTIFICATE CAMBER AS SHOWN ON DRAWINGS.
PLYWOOD
ALL PLYWOOD SHALL BE AMERICAN PLYWOOD ASSOCIATION "CDX" RATED SHEATHING OR BETTER AND SHALL BEAR THE STAMP OF AN APPROVED TESTING AGENCY. LAY UP PLYWOOD WITH FACE GRAIN PERPENDICULAR TO SUPPORTS. (ON ROOFS WHERE PLYWOOD IS LAID UP WITH FACE GRAIN PARALLEL TO SUPPORTS, USE A MINIMUM OF 5-PLY PLYWOOD). STAGGER JOINTS. ALL NAILING, COMMON NAILS. WHERE SCREWS ARE INDICATED FOR WOOD TO WOOD ATTACHMENTS, USE WOOD SCREWS. ALL PLYWOOD SHALL BE OF THE FOLLOWING NOMINAL THICKNESS, SPAN/INDEX RATIO AND SHALL BE ATTACHED AS FOLLOWS UNLESS NOTED OTHERWISE:

USE	THICKNESS	SPAN/INDEX RATIO	EDGE ATTACHMENT	INTERMEDIATE ATTACHMENT
ROOF	5/8"	32/16	10d AT 6" O.C.	10d. AT 12' O.C.

ALTERNATE:
AMERICAN PLYWOOD ASSOCIATION PERFORMANCE RATED SHEATHING MAY BE USED AS AN ALTERNATE TO PLYWOOD WITH PRIOR APPROVAL OF OWNER, ARCHITECT AND ROOFING CONTRACTOR. WHERE ROOF IS TO BE GUARANTEED, IT MAY NOT BE USED WITHOUT PRIOR APPROVAL FROM ROOF SYSTEM MANUFACTURER. RATED SHEATHING SHALL COMPLY WITH I.C.B.O. REPORT NO. NER-124, EXPOSURE 1, AND SHALL HAVE A SPAN RATING AND SHEAR VALUES EQUIVALENT TO OR BETTER THAN THE PLYWOOD IT REPLACES. ATTACHMENT AND THICKNESS (WITHIN 1/32") SHALL BE THE SAME AS THE PLYWOOD IT REPLACES. INSTALL PER MANUFACTURER'S RECOMMENDATIONS.

GENERAL:
NOTE: NO BEARING STUD WALLS.
DO NOT NOTCH OR DRILL JOISTS, BEAMS OR ~~LOAD BEARING STUDS~~ WITHOUT PRIOR APPROVAL OF THE STRUCTURAL ENGINEER THRU THE ARCHITECT. PROVIDE 2"
ALL NAILING NOT NOTED SHALL BE ACCORDING TO TABLE 25Q OF THE UNIFORM BUILDING CODE. WOOD CONNECTORS SHALL BE AS MANUFACTURED BY SIMPSON STRONG-TIE COMPANY, INC. OR OTHER MANUFACTURER WITH CURRENT AND EQUIVALENT I.C.B.O. APPROVAL.

SHOP DRAWINGS:
SHOP DRAWINGS SHALL BE SUBMITTED FOR ALL STRUCTURAL ITEMS IN ADDITION TO ITEMS REQUIRED BY ARCHITECTURAL SPECIFICATIONS. THE CONTRACTOR SHALL REVIEW ALL SHOP DRAWINGS PRIOR TO SUBMITTAL. THOSE ITEMS NOT IN ACCORDANCE WITH CONTRACT DOCUMENTS SHALL BE FLAGGED UPON CONTRACTOR'S REVIEW. VERIFY ALL DIMENSIONS WITH ARCHITECT. MANUFACTURER OR FABRICATOR SHALL CLOUD ANY CHANGES, SUBSTITIONS, OR DEVIATIONS FROM CONTRACT DOCUMENTS. ANY OF THE AFOREMENTIONED WHICH ARE CLOUDED OR FLAGGED BY SUBMITTING PARTIES, SHALL NOT BE CONSIDERED APPROVED AFTER ENGINEER'S REVIEW, UNLESS NOTED ACCORDINGLY. THE ENGINEER HAS THE RIGHT TO APPROVE OR DISAPPROVE ANY CHANGES TO CONTRACT DOCUMENTS AT ANYTIME BEFORE OR AFTER SHOP DRAWING REVIEW. THE SHOP DRAWINGS DO NOT REPLACE THE CONTRACT DOCUMENTS. ITEMS OMITTED OR SHOWN INCORRECTLY AND ARE NOT FLAGGED BY THE STRUCTURAL ENGINEER OR ARCHITECT SHALL NOT BE CONSIDERED CHANGES TO CONTRACT DOCUMENTS. IT IS THE CONTRACTOR'S RESPONSIBILITY TO ENSURE ITEMS ARE CONSTRUCTED TO CONTRACT DOCUMENTS. THE ADEQUACY OF ENGINEERING DESIGNS AND LAYOUT PERFORMED BY OTHERS RESTS WITH THE DESIGNING OR SUBMITTING AUTHORITY. REVIEWING IS INTENDED ONLY AS AN AID TO THE CONTRACTOR IN OBTAINING CORRECT SHOP DRAWINGS. RESPONSIBILITY FOR CORRECTNESS SHALL REST WITH THE CONTRACTOR.

GENERAL:
THE STRUCTURAL CONSTRUCTION DOCUMENTS REPRESENT THE FINISHED STRUCTURE. THEY DO NOT INDICATE THE METHOD OF CONSTRUCTION. THE CONTRACTOR SHALL PROVIDE ALL MEASURES NECESSARY TO PROTECT THE STRUCTURE DURING CONSTRUCTION. SUCH MEASURES SHALL INCLUDE, BUT NOT BE LIMITED TO, BRACING, SHORING FOR LOADS DUE TO CONSTRUCTION EQUIPMENT, ETC. THE STRUCTURAL ENGINEER SHALL NOT BE RESPONSIBLE FOR THE CONTRACTOR'S MEANS, METHODS, TECHNIQUES, SEQUENCES FOR PROCEDURE OF CONSTRUCTION, OR THE SAFETY PRECAUTIONS AND THE PROGRAMS INCIDENT THERETO (NOR SHALL OBSERVATION VISITS TO THE SITE INCLUDE INSPECTION OF THESE ITEMS). CONSTRUCTION MATERIALS SHALL BE SPREAD OUT IF PLACED ON FRAMED CONSTRUCTION. LOAD SHALL NOT EXCEED THE DESIGN LIVE LOAD PER SQUARE FOOT. WHERE REFERENCE IS MADE TO VARIOUS TEST STANDARDS FOR MATERIALS, SUCH STANDARDS SHALL BE THE LATEST EDITION AND/OR ADDENDA. ESTABLISH AND VERIFY ALL OPENINGS AND INSERTS FOR ARCHITECTURAL, MECHANICAL, PLUMBING AND ELECTRICAL WITH APPROPRIATE TRADES, DRAWINGS AND SUBCONTRACTORS PRIOR TO CONSTRUCTION. OPTIONS ARE FOR CONTRACTOR'S CONVENIENCE. IF AN OPTION IS CHOSEN, CONTRACTOR SHALL BE RESPONSIBLE FOR ALL NECESSARY CHANGES AND SHALL COORDINATE ALL DETAILS. NOTES AND DETAILS ON DRAWINGS SHALL TAKE PRECEDENCE OVER GENERAL STRUCTURAL NOTES AND TYPICAL DETAILS. WHERE NO DETAILS ARE SHOWN, CONSTRUCTION SHALL CONFORM TO SIMILAR WORK ON THE PROJECT. CONTRACTOR SHALL BE RESPONSIBLE FOR VERIFICATION OF ALL DIMENSIONS WITH ARCHITECTURAL DRAWINGS PRIOR TO START OF CONSTRUCTION. RESOLVE ANY DISCREPANCY WITH THE ARCHITECT. TYPICAL DETAILS MAY NOT NECESSARILY BE CUT ON PLANS, BUT APPLY UNLESS NOTED OTHERWISE. WHERE DISCREPANCIES OCCUR BETWEEN PLANS, DETAILS, GENERAL STRUCTURAL NOTES, AND SPECIFICATIONS, THE GREATER REQUIREMENTS SHALL GOVERN. ANY ENGINEERING DESIGN, PROVIDED BY OTHERS AND SUBMITTED FOR REVIEW, SHALL BEAR THE SEAL OF A REGISTERED ENGINEER RECOGNIZED BY THE BUILDING CODE, JURISDICTION OF THIS PROJECT.

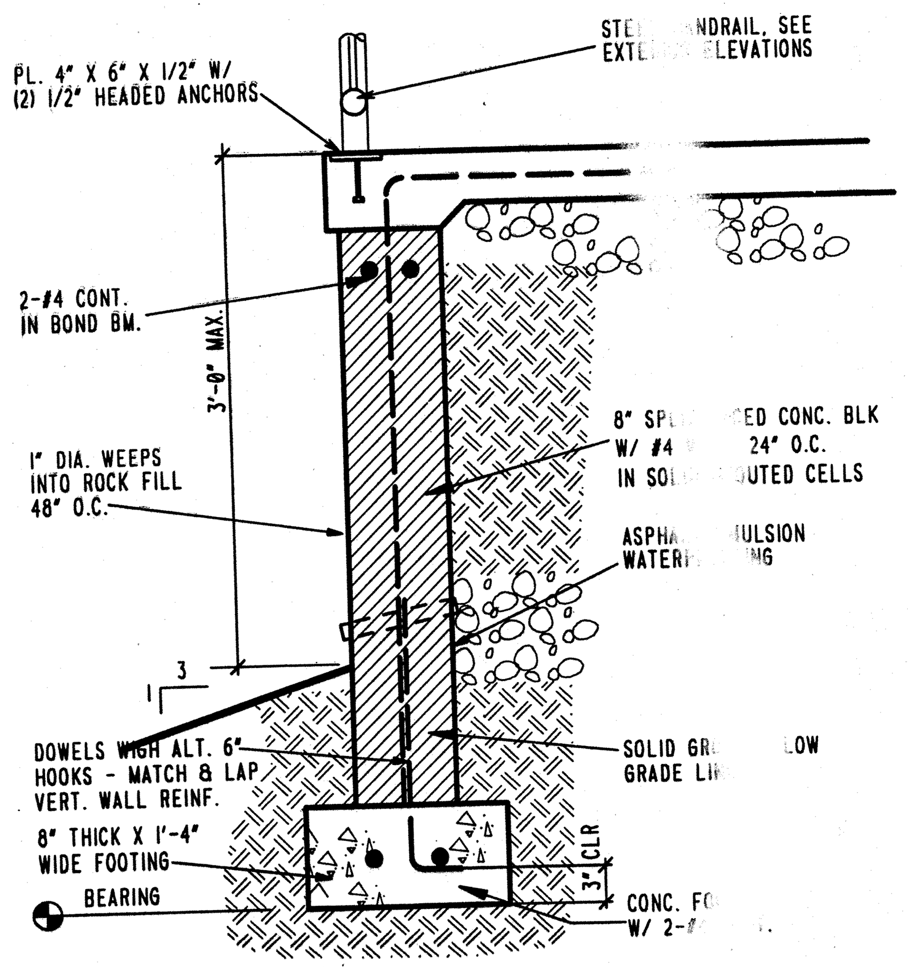

NOTE: BEARING OF FOOTING SHALL BE A MINIMUM OF 2'-6" BEL… ADJACENT FINISH GRADE.

4 LANDING DETAIL
1" = 1'

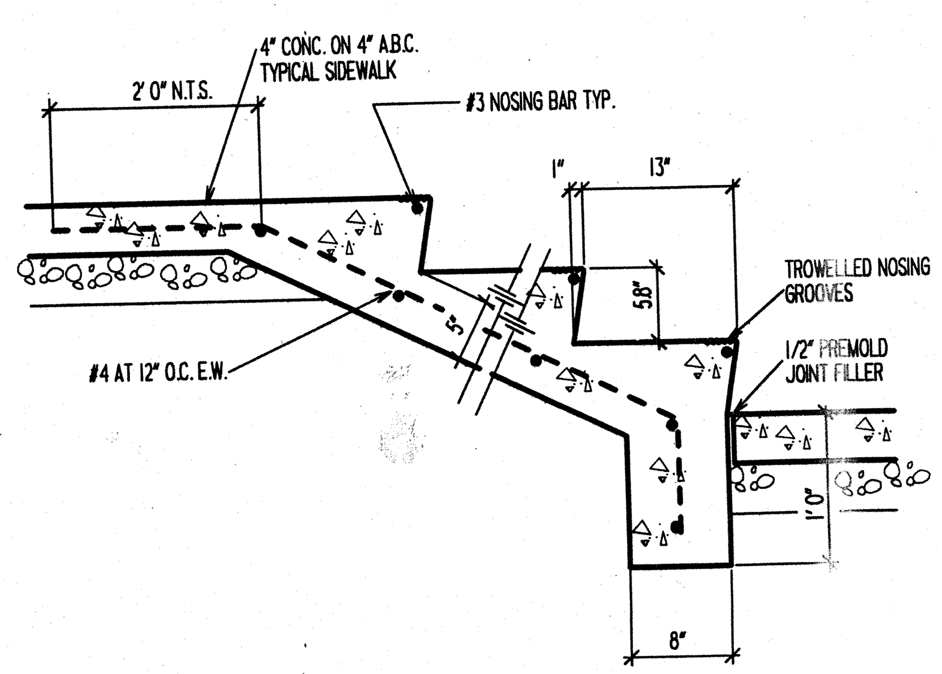

3 STAIR DETAIL
1" = 1'

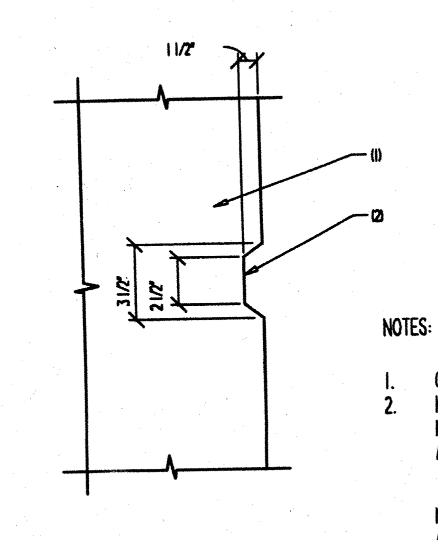

NOTES:
1. CONCRETE.
2. KEYED JOINT - REMOVE FORM MATERIAL PRIOR TO PLACING ADJACENT CONCRETE.

NOTE:
ALL DIMENSIONS ARE +/- 1/2".

2 TYPICAL KEY IN CONCRETE
NO SCALE
CTS6

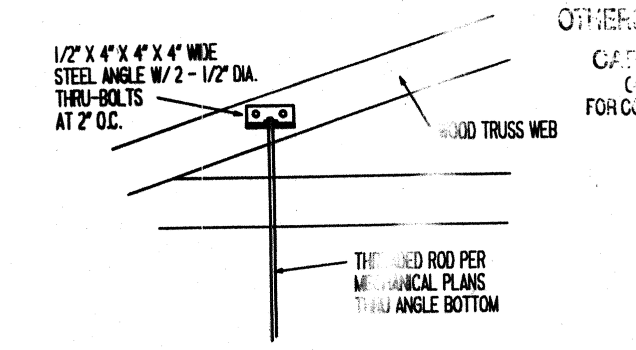

1 MECHANICAL SUPPORT AT WOOD TRUSS
NO SCALE

REGISTERED ARCHITECT CERTIFICATE NO. 17600 BRUCE J. BAUMRUK Date Signed 12-31-98 ARIZONA, U.S.A.

BAI JOB NO. 9838
DRAWN BY: BJB
CHECKED BY CTS
SCALE: AS NOTED
DATE: 12-31-98
REVISED: BY:

ENGINEERING / ENVIRONMENTAL SERVICES BUILDING
CITY OF PRESCOTT
433 N. VIRGINIA STREET PRESCOTT, ARIZONA

Registered Professional Engineer (Civil) CERTIFICATE NO. 16977 HARVEY A. FUNDERBURK Date Signed ARIZONA, U.S.A.

S-1

THIS DRAWING HAS BEEN PREPARED BY OTHERS AND REVIEWED BY:
CARL… SCOTT, INC.
CONSULTING STRUCTURAL ENGINEERS
FOR CORRECTNESS OF STRUCTURAL ITEMS ONLY

BAUMRUK ARCHITECTURE INC.
111 PARK AVENUE
PRESCOTT, ARIZONA
(520) …5-6920 TEL
(520) …45-6921 FAX

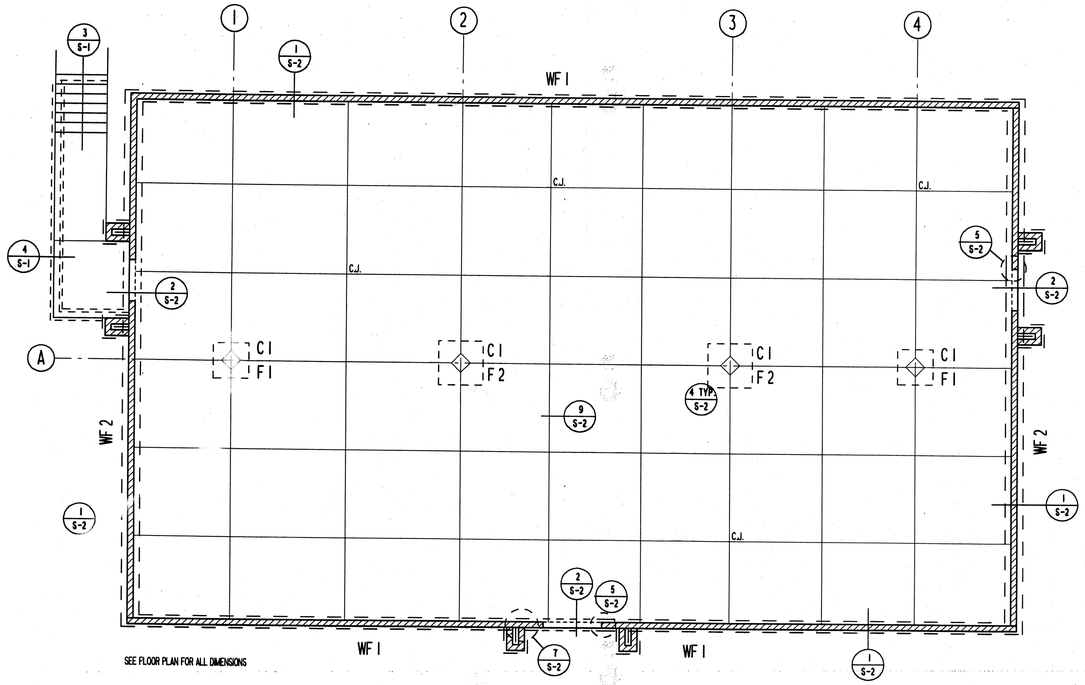

FOUNDATION PLAN

1/8" = 1' 0"

NORTH

F COLUMN FOOTING SCHEDULE				
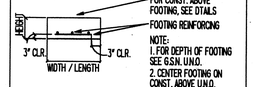 NOTE: 1. FOR DEPTH OF FOOTING SEE G.S.N. U.N.O. 2. CENTER FOOTING ON CONST. ABOVE U.N.O.				
MARK	HEIGHT	WIDTH	LENGTH	REINFORCING
F1	12"	4'-0"	4'-0"	5 #5 EA. WAY
F2	12"	5'-0"	5'-0"	7 #5 EA. WAY

C COLUMN SCHEDULE		
MARK	SIZE	BASE CONNECTION PLATE SIZE
C1	5" DIA. STD PIPE	10" X 10" X 3/4" - 4-3/4" DIAMETER ANCHOR BOLTS

WF CONTINUOUS FOOTING SCHEDULE				
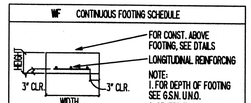 NOTE: 1. FOR DEPTH OF FOOTING SEE G.S.N. U.N.O. 2. CENTER FOOTING ON CONST. ABOVE U.N.O. 3. EXTEND FOOTINGS 12" BEYOND JAMBS U.N.O.				
MARK	HEIGHT	WIDTH	LONGITUDINAL REINF	TRANSVERSE REINF
WF1	12"	1'-4"	2 - #4	
WF2	12"	2'-0"	2 - #4	

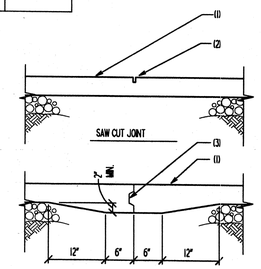

KEYED JOINT

NOTES:

1. CONCRETE SLAB ON GRADE.
2. SAWCUT - 1/8" WIDE X 1/4 SLAB THICKNESS IN DEPTH - CUT SHALL BE MADE SOON ENOUGH TO PREVENT SHRINKAGE CRACKING, BUT NOT SO SOON AS TO CAUSE SPALLING OF THE CONCRETE WHILE SAWING. WORK MUST BE ACCOMPLISHED WITHIN 24 HOURS OF CONCRETE PLACEMENT.
3. CONTINUOUS KEY - SEE TYPICAL KEY IN CONCRETE DETAIL 2 ON A-6.

NOTE:
KEYED JOINTS NEED ONLY OCCUR AT EXPOSED EDGES DURING PLACEMENT UNLESS SPECIFICALLY NOTED ON THE PLANS. "TOOL WET JOINT", "ZIP STRIP", ETC. SHALL MATCH SAWCUT REQUIREMENTS.

9 CONTROL JOINTS IN CONCRETE SLAB ON GRADE
NO SCALE 101-01

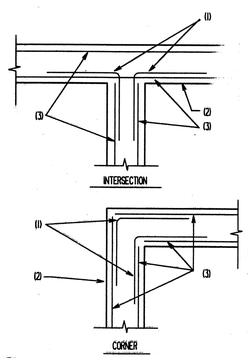

NOTES:

1. CORNER BARS SAME SIZE AND SPACING AS HORIZONTAL REINFORCING. LAP PER G.S.N. (24" MINIMUM).
2. CONCRETE STEM WALL OR FOOTING.
3. REINFORCING PER PLANS AND/OR DETAILS.

8 PLAN - CORNER REINFORCING IN CONCRETE FOOTING, STEM OR WALL
NO SCALE CTS10

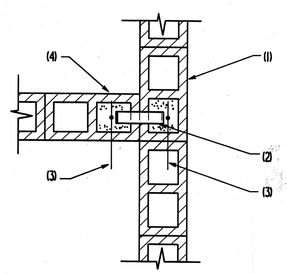

NOTES:

1. CONTINUOUS MASONRY WALL.
2. 1/8" THICK X 1 1/4" WIDE X 2" X 8" X 2" BENT STEEL "Z" BAR AT 48" O.C.
3. 1 VERTICAL BAR IN GROUTED CELLS AT END AND AT INTERSECTION OF WALLS.
4. MASONRY WALL WHICH ABUTS CONTINUOUS MASONRY WALL AND IS NOT "TOOTHED" INTO IT.

7 TYPICAL CONNECTION FOR NON-TOOTHED ABUTTING MASONRY WALLS
NO SCALE CTS8

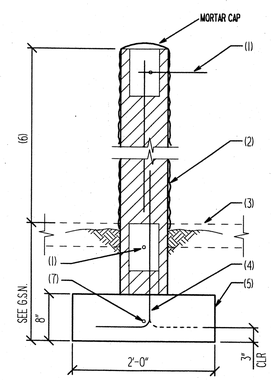

NOTES:

1. 1 #5 CONTINUOUS IN 8" DEEP GROUTED BOND BEAM.
2. 8" MASONRY WALL WITH #5 VERTICALS AT 48" O.C. GROUT SOLID BELOW GRADE. (#4'S VERT. AT 4' H. WALL)
3. FINISHED GRADE OR CONCRETE SLAB WHERE OCCURS.
4. DOWELS TO MATCH AND LAP VERTICAL WALL REINFORCING PER G.S.N. - ALTERNATE BENDS.
5. CONCRETE FOOTING.
6. FOR TOP OF WALL, SEE ARCHITECTURAL DRAWINGS - 6'-0" MAX.
7. 1 #4 CONTINUOUS.

6 6'-0" MAXIMUM FREE-STANDING MASONRY WALL AND FOOTING
NO SCALE CTS5

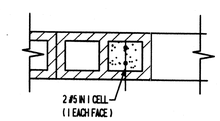

5 MASONRY JAMB
NO SCALE CTS12

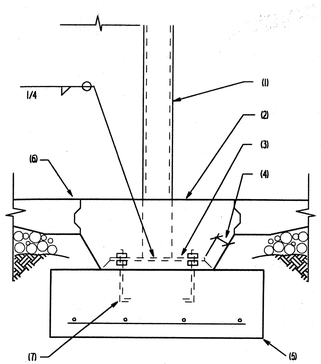

PLAN VIEW - TYPICAL STEEL COLUMN BASE PLATE

NOTES:

1. CENTERLINE OF COLUMN AND STEEL BASE PLATE.
2. STEEL BASE PLATE.
3. 1 1/4" MINIMUM OR PER AISC TABLE J3.5.

NOTE:
COLUMN OMITTED FOR CLARITY. FOR COLUMN TYPE, SIZE AND BASE PLATE AND ANCHOR BOLTS, SEE SCHEDULE.

NOTES:

1. STEEL COLUMN.
2. CONCRETE CLOSURE POUR AROUND COLUMN PER TYPICAL DETAIL.
3. STEEL BASE PLATE OVER 1 1/2" DRYPACK.
4. 3" MIN CONCRETE COVER ALL AROUND STEEL BELOW
5. [illegible] FOOTING.
6. [illegible] SLAB ON GRADE.
7. ANCHOR [illegible] WITH DOUBLE N[illegible]

4 STEEL COLUMN FOOTING
NO SCALE CTS4

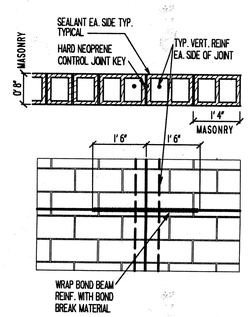

3 MASONRY CONTROL JOINT
NO SCALE

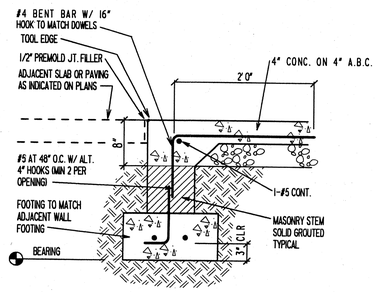

NOTE: BEARING OF FOOTING SHALL BE PER GSN.

2 TURNDOWN AT OPENING
1" = 1'-0"

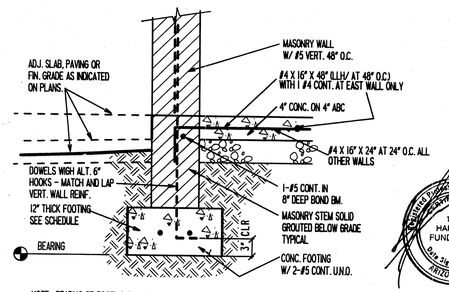

NOTE: BEARING OF FOOTING SHALL BE PER GSN.

1 TYPICAL CMU WALL FOOTING
1" = 1'-0"

REGISTERED ARCHITECT
CERTIFICATE NO. 17600
BRUCE J. BAUMRUK
DATE EXPIRES 12-31-98
ARIZONA U.S.A.

BAI JOB NO. 9836
DRAWN BY: BJB
CHECKED BY CTS
SCALE: AS NOTED
DATE: 12-31-96
REVISED: BY:

ENGINEERING / ENVIRONMENTAL SERVICES BUILDING

CITY OF PRESCOTT

433 N. VIRGINIA STREET PRESCOTT, ARIZONA

S-2

FOUNDATION DETAILS

BAUMRUK ARCHITECTURE INC.
111 PARK AVENUE
PRESCOTT, ARIZONA
(520) 445-6920 TEL
(520) 445-6921 FAX

REGISTERED PROFESSIONAL ENGINEER (CIVIL) CERTIFICATE NO. 16977 HARVEY A. FUNDERBURK Date Signed 3-3-98 ARIZONA, U.S.A.

THIS DRAWING HAS BEEN PREPARED BY OTHERS AND REVIEWED BY:

CARUSO TURLEY SCOTT, INC.
CONSULTING STRUCTURAL ENGINEERS
FOR CORRECTNESS OF STRUCTURAL ITEMS ONLY

CONNECTION (COMMON NAILS ONLY)	NAILING
JOIST TO SILL OR GIRDER, TOENAIL	3 - 8d
BRIDGING TO JOIST, TOENAIL EACH END	2 - 8d
SOLE PLATE TO JOIST OR BLOCKING, TYPICAL FACE NAIL SOLE PLATE TO JOIST OR BLOCKING, AT BRACED WALL PANEL	16d AT 16" O.C. 3-16d PER 16"
TOP PLATE TO STUD, END NAIL	2 - 16d
STUD TO SOLE PLATE	4 - 8d, TOENAIL OR 2 - 16d, END NAIL
DOUBLED STUDS, FACE NAIL	16d AT 24" O.C.
DOUBLED TOP PLATES, FACE NAIL DOUBLED TOP PLATES, LAP SPLICE	16d AT 16" O.C. 8 - 16d
BLOCKING BETWEEN JOISTS OR RAFTERS TO TOP PLATE, TOENAIL	3 - 8d
RIM JOIST TO TOP PLATE, TOENAIL	8d AT 6" O.C.
TOP PLATE, LAPS AND INTERSECTIONS, FACE NAIL	2 - 16d
CONTINUOUS HEADER, TWO PIECES	16d AT 16" O.C. ALONG EACH EDGE
CEILING JOISTS TO PLATE, TOENAIL	3 - 8d
CONTINUOUS HEADER TO STUDS, TOENAIL	4 - 8d
CEILING JOISTS, LAPS OVER PARTITIONS, FACE NAIL	3 - 16d
CEILING JOIST TO PARALLEL RAFTERS, FACE NAIL	3 - 16d
RAFTER TO PLATE, TOENAIL	3 - 8d
BUILT-UP CORNER STUDS	16d AT 24" O.C.
BUILT-UP GIRDER AND BEAMS	20d AT 32" O.C. TOP AND BOTTOM AND STAGGERED 2-20d EACH END AND SPLICES

NOTE: COMMON NAILS ONLY.

9 NAILING SCHEDULE - U.N.O. UNIFORM BUILDING CODE

NO SCALE CTS9

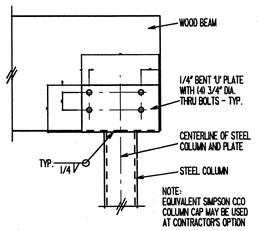

8 WOOD BEAM AT STEEL COLUMN

1" = 1' 0"

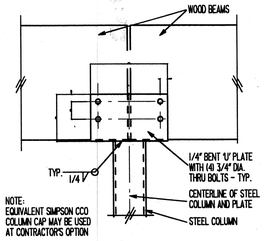

7 WOOD BEAM AT STEEL COLUMN

1" = 1' 0"

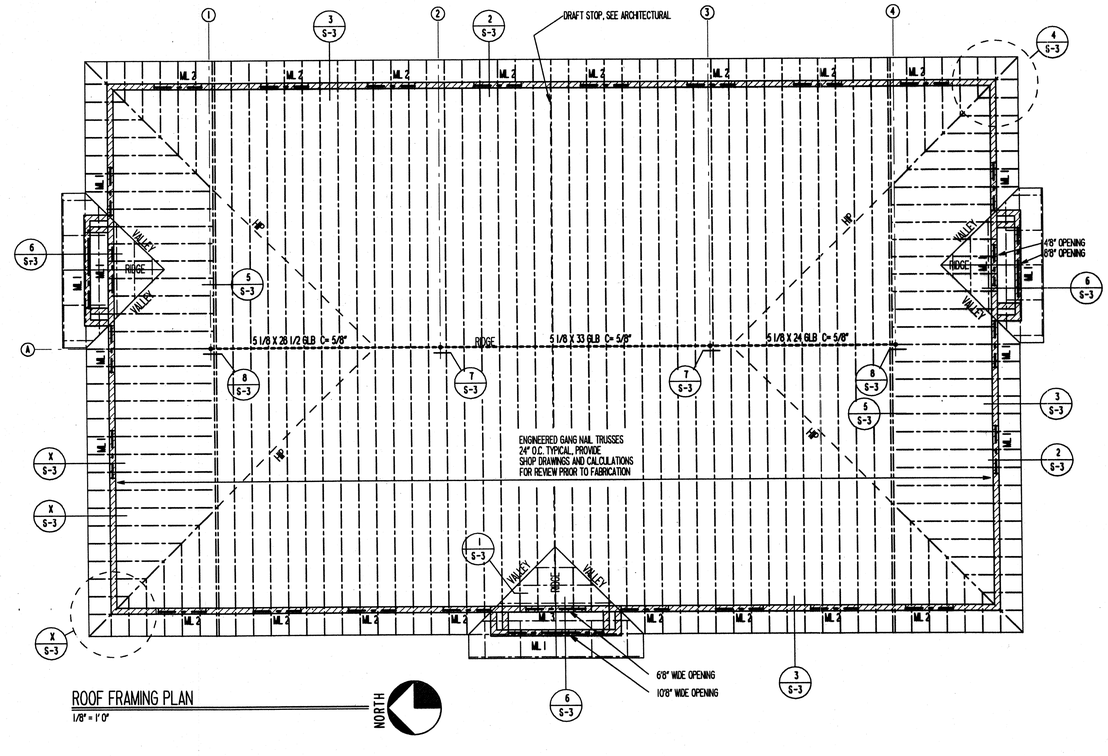

ROOF FRAMING PLAN

1/8" = 1' 0"

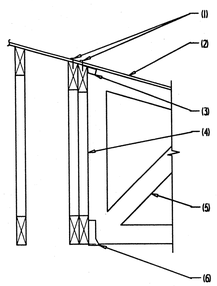

NOTES:

1. EDGE NAILING.
2. PLYWOOD SHEATHING.
3. SIMPSON H3 AT EACH TRUSS.
4. GIRDER TRUSS.
5. JACK TRUSS.
6. SIMPSON HANGER AT EACH TRUSS PER TRUSS MANUFACTURER.

5 PREFABRICATED WOOD TRUSS AT GIRDER TRUSS

NO SCALE CTS3

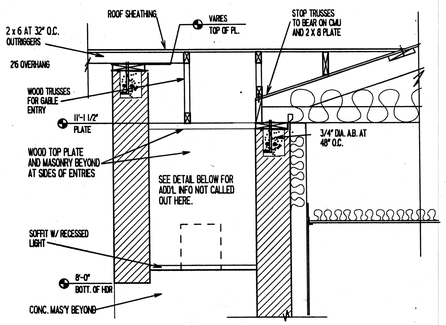

6 SECTION AT TRUSS AND ENTRY

1" = 1'-0"

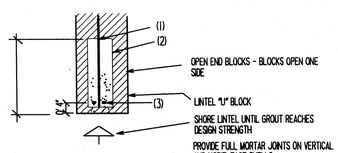

NOTE:
A. VERTICAL REINFORCING TO MATCH AND LAP WALL REINFORCING PER GSN.
B. EXTEND GROUT, OPEN END CMU AND REINFORCING 24" PAST EACH JAMB INSTALL CORNER BARS WHERE 24" CANNOT BE ACHIEVED.
C. DO NOT LAP SPLICE REINFORCING IN SIMPLE SPAN LINTELS
D. SEE G.S.N. FOR ADDITIONAL INFORMATION

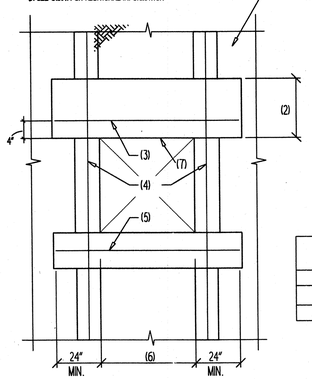

NOTES:

1. MASONRY WALL.
2. DEPTH OF MASONRY LINTEL - SEE SCHEDULE BELOW.
3. LINTEL REINFORCING.
4. VERTICAL REINFORCING IN GROUTED CELL PER PLANS - FULL HEIGHT OF WALL.
5. 2 #5 BARS IN 8" DEEP SOLID GROUTED BOND BEAM - HOOK BARS UP AT WALL CORNERS WHERE MINIMUM DIMENSION CANNOT BE ACHIEVED.
6. OPENING WIDTH.
7. OPEN ENDED BLOCK FULL DEPTH OF LINTEL. EXTEND 24" EACH SIDE.

MARK	DEPTH OF MASONRY LINTEL	REINFORCING	
ML 1	12"	2 - #5	BOTTOM
ML 2	20"	2 - #5	BOTTOM
ML 3	24"	2 - #5	BOTTOM

2 TYPICAL OPENING IN MASONRY WALL

NO SCALE 505-01

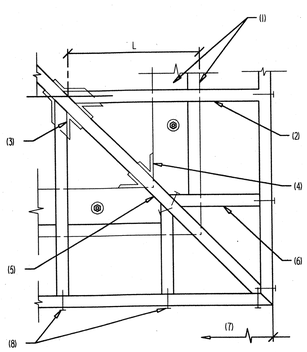

NOTES:

1. WOOD BLOCKING AND PLATE BELOW.
2. JACK TRUSS. INSTALL SIMPSON SUR/SUL26 HANGER AT BOTTOM CHORD WHEN "L" EXCEEDS 2'-0". NAIL TOP CHORD WITH 2-16d TO HIP JACK.
3. SIMPSON SUR/SUL26 AS REQUIRED.
4. SIMPSON H2.5 EACH SIDE
5. HIP JACK TRUSS.
6. TYPICAL JACK TRUSS WITH 2-16d TO HIP [illegible] AT TOP AND [illegible] CHORD.
7. CONTINUOUS [illegible] DO NOT SPLICE WITH [illegible] FROM CORNER [illegible]).
8. 3-16d - 1 1/2" [illegible] EACH TRUSS.

4 PLAN - WOOD JACK TRUSSES AT HIP JACK TRUSS

NO SCALE CTS2

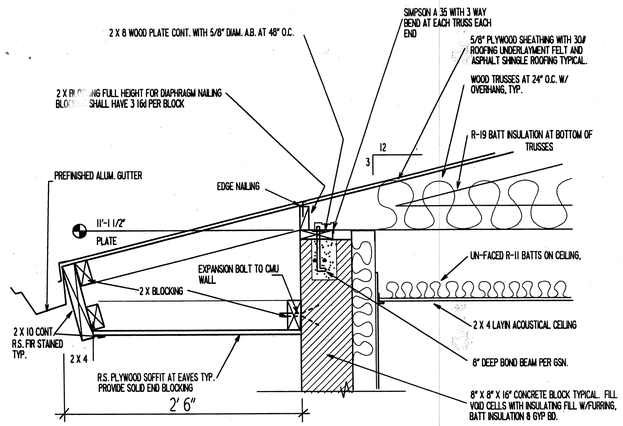

3 TYPICAL EAVE

1" = 1'-0"

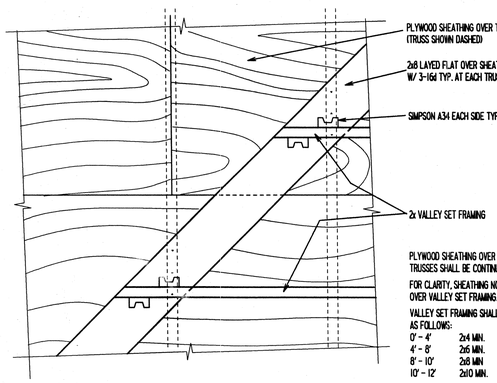

PLYWOOD SHEATHING OVER PRIMARY TRUSSES SHALL BE CONTINUOUS.

FOR CLARITY, SHEATHING NOT SHOWN OVER VALLEY SET FRAMING.

VALLEY SET FRAMING SHALL BE SIZED AS FOLLOWS:

0' - 4'	2x4 MIN.
4' - 8'	2x6 MIN.
8' - 10'	2x8 MIN
10' - 12'	2x10 MIN.

1 VALLEY SET FRAMING

1" = 1' 0" RFRM6122

REGISTERED ARCHITECT
17600
BRUCE J. BAUMRUK
ARIZONA, U.S.A.

BAI JOB NO. 9838
DRAWN BY: BJB
CHECKED BY CTS
SCALE: AS NOTED
DATE: 12-31-98
REVISED: BY:

ENGINEERING / ENVIRONMENTAL SERVICES BUILDING

CITY OF PRESCOTT

433 N. VIRGINIA STREET PRESCOTT, ARIZONA

Registered Professional Engineer (Civil)
16977
HARVEY A. FUNDERBURK
ARIZONA, U.S.A.

THIS DRAWING HAS BEEN PREPARED BY OTHERS AND REVIEWED BY:

CARUSO TURLEY SCOTT, INC.
CONSULTING STRUCTURAL ENGINEERS
FOR CORRECTNESS OF STRUCTURAL ITEMS ONLY

S-3

ROOF FRAMING DETAILS

BAUMRUK ARCHITECTURE INC.
111 PARK AVENUE
PRESCOTT, ARIZONA
(520) 445-6920 TEL
(520) 445-6921 FAX

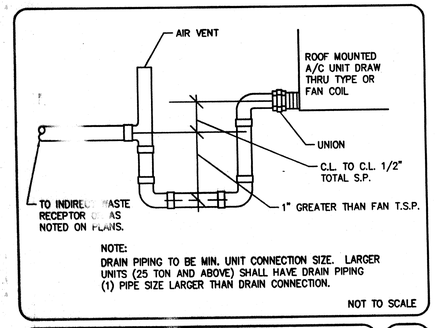

TYP. CONDENSATE DRAIN TRAP — 1 / M-1

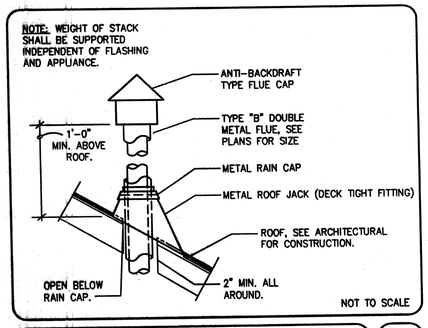

FLUE THRU PITCHED ROOF — 2 / M-1

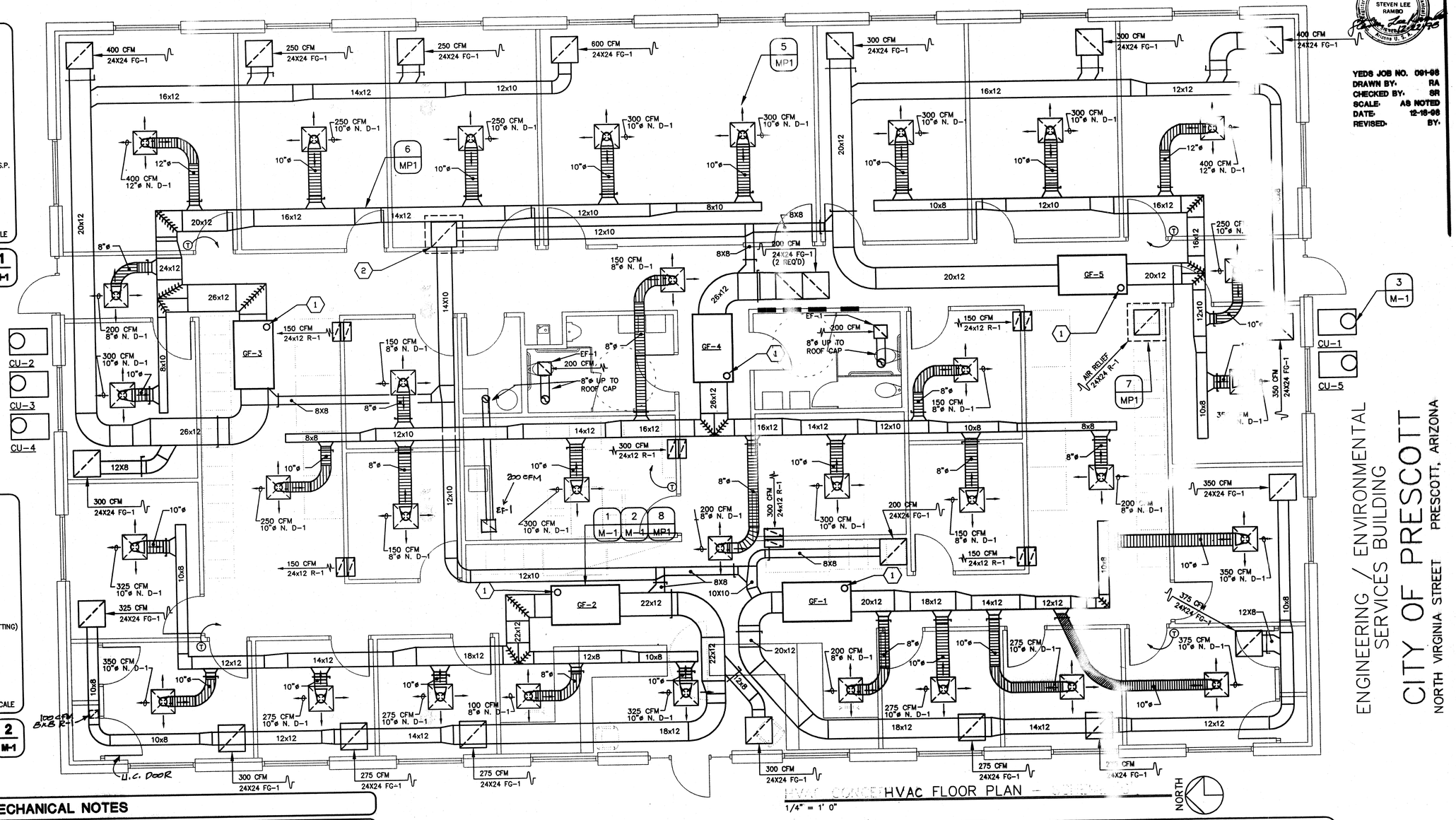

HVAC FLOOR PLAN

1/4" = 1' 0"

YEDS JOB NO. 091-98
DRAWN BY: RA
CHECKED BY: SR
SCALE: AS NOTED
DATE: 12-18-98
REVISED: BY:

ENGINEERING / ENVIRONMENTAL SERVICES BUILDING

CITY OF PRESCOTT

NORTH VIRGINIA STREET PRESCOTT, ARIZONA

MECHANICAL NOTES

1. ALL MECHANICAL EQUIPMENT LOCATIONS TO COMPLY WITH THE U.M.C.
2. COORDINATE EXACT DIFFUSER AND GRILLE LOCATIONS OTHER TRADES.
3. THE MAXIMUM LENGTH OF ANY FLEX DUCT SHALL NOT EXCEED 8 FEET. PROVIDE RIGID ROUND DUCT IF FLEX DUCT LENGTH EXCEEDS 8 FEET, WITH SHEET METAL ELBOW AT DIFFUSER.
4. ALL DUCTS TO BE SHEET METAL WITH 11/2" EXTERIOR INSULATION WITH FOIL FACE.
5. ALL FLEX DUCTS TO BE THERMAFLEX TYPE GKM OR APPROVED EQUAL.
6. ALL OUTSIDE AIR INTAKES SHALL BE MINIMUM 10 FEET FROM ANY EXHAUST OR PLUMBING VENTS.
7. EXTEND 3/4" PVC CONDENSATE DRAIN AS SHOWN ON DRAWING, OR TO NEAREST PLUMBING TAIL PIECE.
8. SET A/C UNIT OSA TO CFM AS SPECIFIED, ON DRAWING.
9. TEST AND BALANCE SYSTEM, SUBMIT REPORT TO ENGINEER WITHIN 10 DAYS OF COMPLETING TEST AND BALANCE.
10. ALL NEW DUCTWORK TO BE CONSTRUCTED AND INSTALLED IN ACCORDANCE WITH "ASHRAE GUIDE AND SMACNA STANDARDS".
11. MECHANICAL CONTRACTOR TO VERIFY THAT ALL DUCTWORK WILL FIT WHERE INDICATED WITHOUT INTERFERENCE WITH STRUCTURAL MEMBERS OR OTHER MATERIALS OR EQUIPMENT.
12. CONTRACTOR AND OWNER TO VERIFY T-STAT LOCATIONS.
13. COORDINATE ALL MECHANICAL WORK, INCLUDING EQUIPMENT, DUCTWORK AND PIPING, WITH ARCHITECT AND OTHER TRADES PRIOR TO WORK.
14. THE MECHANICAL CONTRACTOR SHALL COORDINATE WITH THE ELECTRICAL CONTRACTOR REGARDING SPACE AVAILABILITY FOR RECESSED LIGHTING AND DUCTWORK TO AVOID RELOCATION DUCTWORK AT THE MECHANICAL CONTRACTOR'S EXPENSE.
15. THERMOSTATS SHALL BE 7 DAY PROGRAMMABLE WITH AUTOMATIC CHANGE-OVER LOCKING COVER AND FAN ON CONTINUOUSLY. HONEYWELL OR EQUAL T-7300 WITH COMMERCIAL SUBBASE.
16. DUCTS SHALL CONFORM TO DIMENSIONS ON THE DRAWING UNLESS LOCATION OF STRUCTURAL MEMBERS PROHIBITS. IN CASE OF A CHANGE IN DIMENSIONS, CROSS SECTIONAL AREAS SHALL BE MAINTAINED.
17. ALL DUCTS SHALL BE SUBSTANTIALLY SUPPORTED WITH HANGERS TO THE STRUCTURE. PLACING SUPPORTS NOT OVER 8 FEET APART ALONG THE LENGTH OF THE DUCT. SHEET METAL SHALL BE IN ACCORDANCE WITH THE FOLLOWING SCHEDULE:

UP TO 12" WIDTH	26 GAUGE STEEL
13" TO 30" WIDTH	24 GAUGE STEEL
31" TO 60" WIDTH	22 GAUGE STEEL

18. ALL DUCTWORK SHALL BE INSTALLED PER THE LATEST SMACNA MANUAL FOR LOW PRESSURE DESIGN.
19. DUCTWORK TO CONFORM TO CHAPTER 5 & 6 U.M.C.
20. ALL INSULATION, MATERIAL, COVERINGS, ADHESIVES, VAPOR-BARRIERS AND TAPES SHALL CONFORM TO NFPA '90A, FLAME SPREAD CLASSIFICATION NOT TO EXCEED 25 AND SMOKE DEVELOPMENT NOT TO EXCEED 50.
21. THE EXHAUST DUCTS MUST TERMINATE 10 FEET HORIZONTALLY FROM OR 3 FEET ABOVE ALL AIR INTAKES.
22. SEAL ALL JOINTS IN DUCTWORK WITH HARDCAST #321.
23. FURNISH ALL LABOR, MATERIALS, TOOLS, EQUIPMENT, FEES, PERMITS, CERTIFICATE OF INSPECTION, ETC. NECESSARY OR REASONABLE REQUIRED FOR THE COMPLETE INSTALLATION OF ALL AIR-CONDITIONING WORK. THE WORK SHALL BE IN STRICT ACCORDANCE WITH ASHRAE GUIDE, AND ALL LOCAL AND STATE CODES, ORDINANCES AND REGULATIONS.
24. PROVIDE RADIUS ELBOWS, TURNING VANES, AND SPLITTER DAMPERS IN BRANCHES AND EXTRACTORS WHERE APPLICABLE.
25. DUCT SIZES SHOWN ARE "CLEAR INSIDE" DIMENSIONS.
26. MECHANICAL CONTRACTOR TO VERIFY AND COORDINATE AVAILABLE VOLTAGE WITH THE ELECTRICAL CONTRACTOR PRIOR TO ORDERING EQUIPMENT.
27. ALL EQUIPMENT WHICH HAVE COMPUTER "CHIPS" THAT ARE DATE SENSITIVE MUST BE "Y2K" COMPLIANT.
28. LOCATE ALL DIFFUSERS, GRILLES & REGISTERS ACCORDING TO ARCHITECTURAL REFLECTED CEILING PLAN.

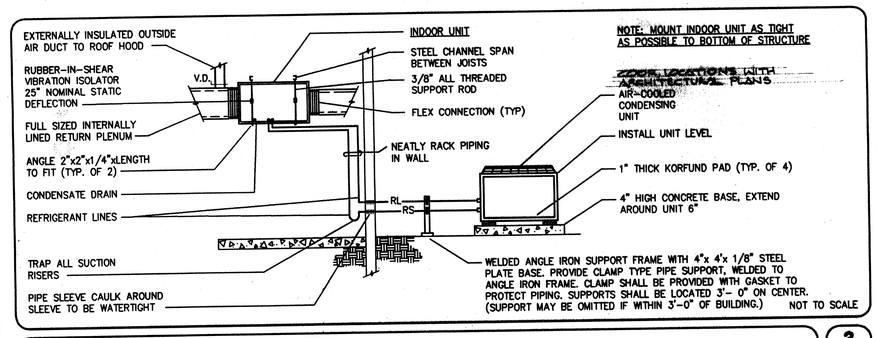

DX PIPING AND AIR HANDLER SCHEMATIC — 3 / M-1

KEYED NOTES

1. 4"ø FLUE, 'B' VENT UP THRU ROOF W/ CAP
2. AIR INTAKE, GREENHECK "FABRA" 16" X 16" THROAT
3. AIR RELIEF, GREENHECK "FABRA" 16" X 16" THROAT

YAVAPAI ENGINEERING DESIGN SERVICES
300 E. WILLIS SUITE B
PRESCOTT, AZ. 86301
PH. (520) 776-4900
FAX (520) 776-7800

FILE #A98053M1

M-1

BAUMAUK ARCHITECTURE INC.
111 PARK AVENUE
PRESCOTT, ARIZONA
(520) 445-6920 TEL
(520) 445-6921 FAX

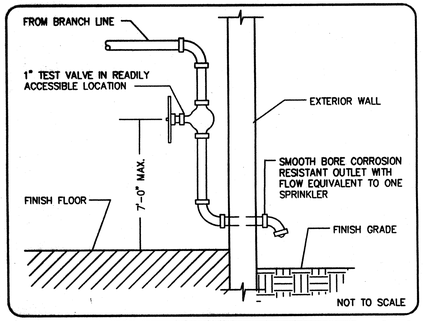

ALTERNATE #5
INSPECTOR TEST
1 / MP1

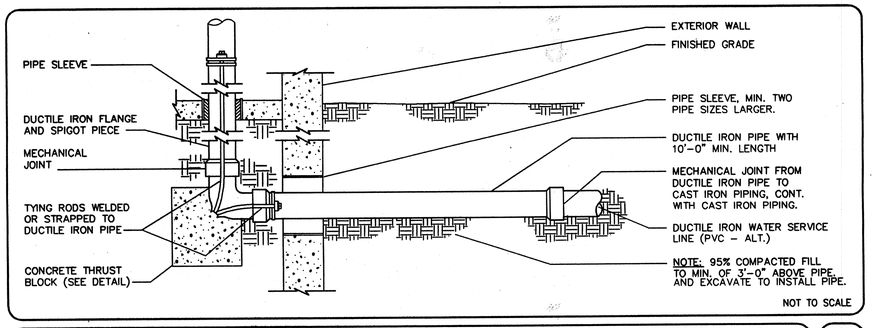

ALTERNATE #5
FIRE PROTECTION WATER MAIN ENTRY
2 / MP1

EXHAUST FAN SCHEDULE

MARK	MANUFACTURER	MODEL	CFM	RPM	ESP	HP/WATTS	VOLTS/PH	WT. LBS.	AREA SERVED	REMARKS
EF-1,2	GREENHECK	SB-70	200	1260	.250	1/4 HP	115/1	30	[illegible]ET	1 2

1 PROVIDE W/ BACK DRAFT DAMPER 2 PROVIDE W/ MANUAL SWITCH

GRILLES / REGISTERS / DIFFUSERS SCHEDULE

MARK	MANUFACTURER	DESCRIPTION	MODEL	FRAME	MODULE	O.B.D.	FINISH	REMARKS
D-1	KRUEGER	CEILING	SERIES 1400	LAY-IN	24"X24"	NO	OFF WHITE	STEEL CONSTRUCTION
R-1	KRUEGER	CEILING	5810	LAY-IN	12"X24"	NO	OFF WHITE	HORIZONTAL DEFLECTION
FG-1	KRUEGER	CEILING	S80H5FF	LAY-IN	24"X12"	NO	OFF WHITE	STEEL CONSTRUCTION

SPLIT SYSTEM GAS/ ELECTRIC AIR CONDITIONING UNIT SCHEDULE

SYMBOL	MANUFACTURER & MODEL NO.		INDOOR UNIT COIL/BLOWER							NATURAL GAS MBH		OUTDOOR UNIT			MIN. ARI SEER	COOLING CAPACITIES - COIL/AIR HAND.				
	INDOOR UNIT	OUTDOOR UNIT	TOTAL CFM	O.A. CFM	E.S.P.	H.P.	VOLT/ø	REFRIG-ERANT	-	INPUT	OUTPUT	MAX RLA	MCA	VOLT/ø		ENT. AIR DB	ENT. AIR WB	AMBIENT DB	AMBIENT WB	REMARKS
GF1/CU1	RUUD UGPH75	RUUD UAKA-042	1475	150	.4"	1/2	115/1 ø	R-22	-	100	80	18.3/18.3	24/24	230/1	10	78	60	95	-	3.5 TON, AIR FILTERS
GF2/CU2 GF5/CU5	RUUD UGPH75	RUUD UAKA-042	1600	180	.4"	3/4	115/1 ø	R-22	-	100	80	18.3/18.3	24/24	230/1	10	78	60	95	-	4 TON, AIR FILTERS
GF3/CU3 GF4/CU4	RUUD UGPH100	RUUD UAKA-060	2000	200	.4"	3/4	115/1 ø	R-22	-	100	80	28.9/28.9	39/39	230/3	10	78	60	95	-	5 TON, AIR FILTERS

UNITS MAY BE RUUD, HEIL, TRANE OR LENNOX

BID ALTERNATES:

ALTERNATE #1: USE RSI ACCESSORY UNITS TO CONVERT GAS FURNACE FOR ECONOMIZERS.

ALTERNATE #2: USE HIGH EFFICIENCY CONDENSER UNITS (12 SEER) AND 90% GAS FURNACES.

GENERAL NOTE:
1. SEE SPECIFICATIONS FOR ADDITIONAL INFORMATION.

CONSTRUCTION NOTES:
A. UNDISTURBED EARTH
B. O.D. OF PIPE + 8"
C. O.D. OF CAP OR PLUG, MIN. 12"x12"

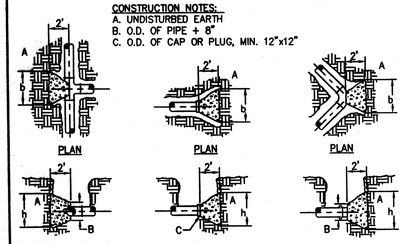

PIPE SIZE	ELBOW ANGLE	ELBOW (b) DIM.	ELBOW (h) DIM.	TEE OR PLUG (b)	TEE OR PLUG (h)
4"	-	-	-	2'	2'
4"	90° 45°	2'	2'	-	-
4"	22°	2'	2'	-	-
6"	-	-	-	2'	2'
6"	90° 45°	2'	2'	-	-
6"	22°	2'	2'	-	-
8"	90°	-	-	3'	3'
8"	90°	3'	3'	-	-
8"	45°	2'	2'	-	-
8"	22°	2'	2'	-	-
10"	-	-	-	3'	3'
10"	90°	3'-6"	-	-	-
10"	45°	3'	3'	-	-
10"	22°	2'	2'	-	-
12"	-	-	-	3'-6"	3'-6"
12"	90°	4"	4"	-	-
12"	45°	3'-6"	3'-6"	-	-
12"	22°	2'	2'	-	-
14"	-	-	-	4'	4'
14"	90°	3"	5"	-	-
14"	45°	3'-6"	3'-6"	-	-
14"	22°	3'	3'	-	-

CONCRETE THRUST BLOCKING
3 / MP1

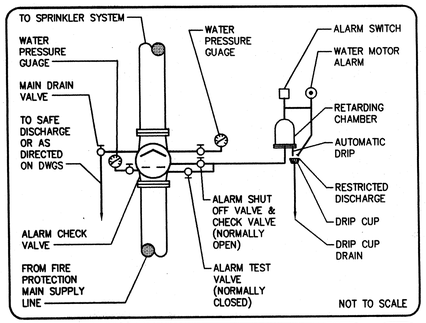

ALTERNATE #5
SPRINKLER ALARM VALVE
4 / MP1

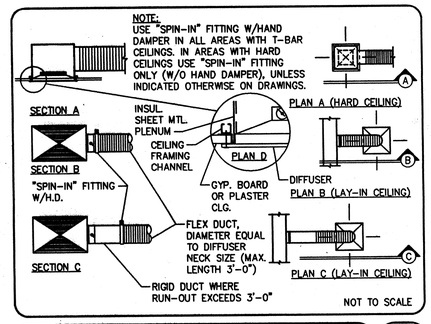

DIFFUSER CONNECTION DETAIL
5 / MP1

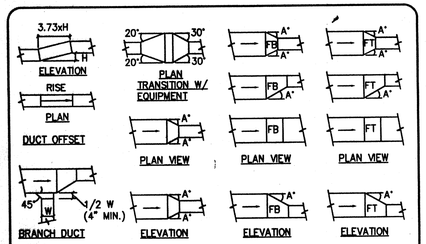

NOTES:
1. ANGLE A = 30° WHEN AIR FLOWS IN DIRECTION OF ARROW (SUPPLY AIR).
2. ANGLE A = 15° WHEN AIR FLOWS IN OPPOSITE DIRECTION OF ARROW (R.A. OR EXHAUST).

NOT TO SCALE

LOW VELOCITY DUCT FITTINGS
6 / MP1

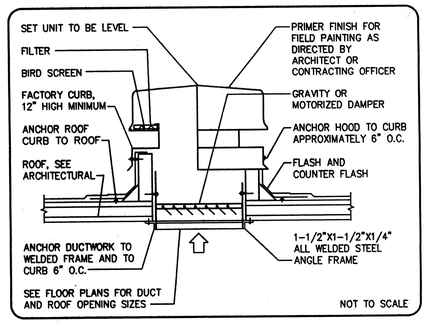

AIR RELIEF/ INTAKE HOOD
7 / MP1

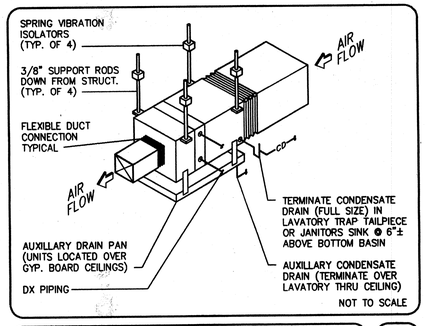

AIR HANDLING UNIT MOUNTING
8 / MP1

REGISTERED PROFESSIONAL ENGINEER (MECHANICAL) CERTIFICATE NO. 9412 STEVEN LEE RAMBO Arizona U.S.A.

YEDS JOB NO. 091-98
DRAWN BY: RA
CHECKED BY: SR
SCALE: AS NOTED
DATE: 12-18-98
REVISED: BY:

ENGINEERING / ENVIRONMENTAL SERVICES BUILDING
CITY OF PRESCOTT
NORTH VIRGINIA STREET PRESCOTT, ARIZONA

MP-1

BAUMRUK ARCHITECTURE INC.
111 PARK AVENUE
PRESCOTT, ARIZONA
(520) 445-6920 TEL
(520) 445-6921 FAX

YAVAPAI ENGINEERING DESIGN SERVICES
300 E. WILLIS SUITE B
PRESCOTT, AZ. 86301
PH. (520) 776-4900
FAX (520) 776-7800

FILE #A98053MP1

PLUMBING FIXTURE SCHEDULE

FIXTURE SPECIFICATIONS					FIXTURE CONNECTIONS				FIXTURE UNITS				
MARK	DESCRIPTION	MANUFACTURER & MODEL NUMBER	FITTING	ACCESSORIES/ REMARKS	COLD WATER	HOT WATER	WASTE	VENT	QUANTITY OF FIXTURES	WATER F.U. EACH	WATER F.U. TOTAL	WASTE F.U. EACH	WASTE F.U. TOTAL
WC-1	WATER CLOSET	MANSFIELD – KILGORE 135-160	FLOOR MOUNTED	FLUSH TANK SPKIT-FRONT SEAT	1/2"	–	3"	2"	1	5	5	6	6
WC-2	WATER CLOSET (HANDICAPPED)	MANSFIELD 135-	FLOOR MOUNTED	FLUSH TANK	1/2"	–	3"	2"	2	5	10	6	12
L-1	LAVATORY (HANDICAPPED)	MANSFIELD #249 19" ROUND	DELTA 23T-334	SELF – RIMMING	1/2"	1/2"	1-1/2"	1-1/2"	4	2	8	2	8
UR-1	URINAL (HANDICAPPED)	MANSFIELD MODEL 405	--	SLOAN FLUSHOMETER	3/4"	–	2"	1-1/2"	1	5	5	2	2
KS-1	KITCHEN SINK	ELKAY LR-3322	EL-2433	COUNTER TOP SINK W/ SPRAY	1/2"	1/2"	2"	1-1/2"	1	4	4	2	2
MS-1	MOP SINK	FIAT 2424-10-3	FIAT 830AA	--	1/2"	1/2"	2"	1-1/2"	1	4	4	6	6
EWC-1	WATER COOLER	ELKAY – LISCA – 8	–	BARRIER FREE, WALL MOUNT	1/2"	–	1-1/2"	1-1/4"	1	2	2	1	1
FFHB	FROST FREE HOSE BIB	WOODFORD B-65	–	--	3/4"	–	–	–	2	5	10	–	–
FD-1	FLOOR DRAIN	J.R. SMITH 2"	–	TAPPED FOR 1/2 PRIMMER	–	–	2"	1-1/2"	2	–	–	2	4
									TOTAL		48		41

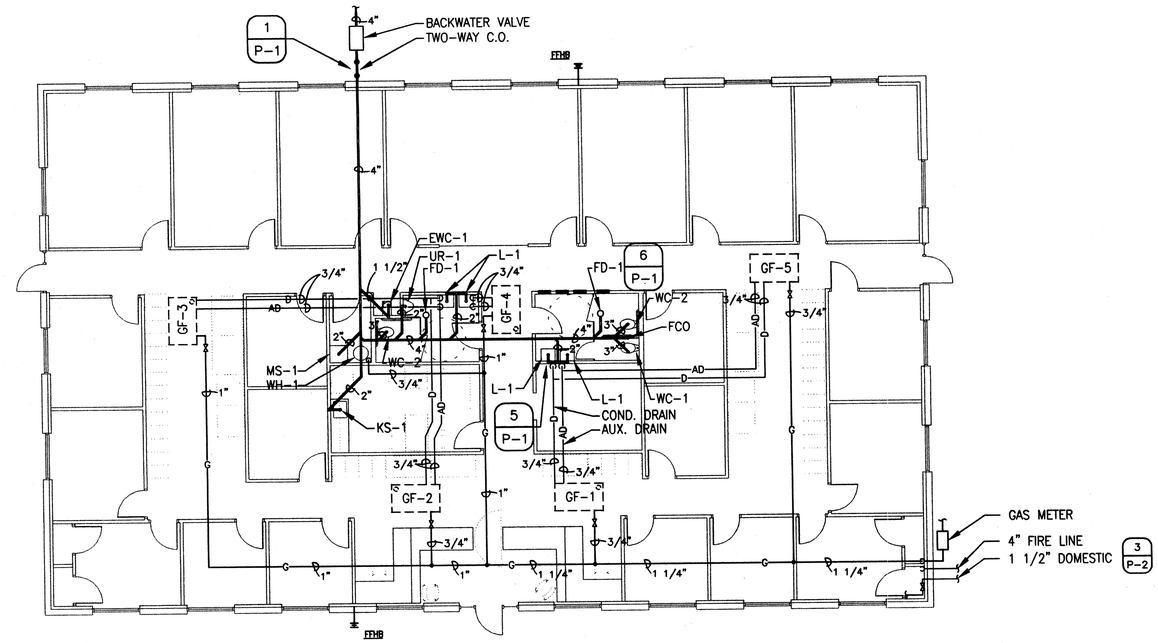

PLUMBING – FLOOR PLAN
1/8" = 1' 0"

NORTH

YEDS JOB NO. 091-98
DRAWN BY: RA
CHECKED BY: SR
SCALE: AS NOTED
DATE: 12-15-98
REVISED: BY:

GENERAL PLUMBING NOTES

1. COMPLY WITH ALL LOCAL, COUNTY, STATE AND FEDERAL CODES, ORDINANCES, RULES AND REGULATIONS.
2. EXACT LOCATION OF PLUMBING FIXTURES SHALL BE DETERMINED FROM ARCHITECTURAL DRAWINGS.
3. USE 95-5 TIN-ANTIMONY SOLDER ON ALL SOLDERED JOINTS 1/2" THROUGH 2". PREPARE JOINTS WITH SOLVENT AND EMERY CLOTH.
4. CONTRACTOR TO EXTEND WATER PIPING TO ALL FIXTURES, OUTLETS, AND EQUIPMENT. PROVIDE SHUT-OFF VALVES OR FIXTURE STOPS, AS REQUIRED FOR PROPER SERVICE.
5. SIZE ALL HANGERS ON INSULATED LINES TO FIT AROUND OUTSIDE DIAMETER OF INSULATION SPECIFIED WITH ALLOWANCES FOR GALVANIZED SHEET METAL SHIELD.
6. INSTALL DIELECTRIC FITTING BETWEEN FERROUS AND NON-FERROUS MATERIALS.
7. PIPE RELIEF DRAIN FOR WATER HEATER TO OUTSIDE OR APPROVED RECEPTACLE.
8. SOIL AND WASTE PIPING SHALL BE SCHEDULE 40 ABS PIPE.
9. SLOPE SOIL WASTE DRAIN PIPING 3" AND SMALLER AT A GRADIENT SLOPE OF NOT LESS THAN 1/4" P.L.F. UNLESS SPECIFICALLY NOTED ON THE DRAWINGS.
10. EACH VENT SHALL TERMINATE NOT LESS THAN SIX (6) INCHES ABOVE ROOF NOR LESS THAN ONE (1) FOOT FROM ANY VERTICAL SURFACE AND NOT LESS THAN TEN (10) FEET FROM OR AT LEAST THREE (3) FEET ABOVE ANY WINDOW, DOOR, OPENING, AIR INTAKE OR VENT SHAFT.
11. GAS PIPING SHALL BE SCHEDULE 40 BLACK STEEL PIPE WITH MALLEABLE FITTINGS.
12. GAS PIPING JOINTS MAY BE SCREWED.
13. ALL GAS LINE FLEXIBLE PIPE CONNECTORS SHALL BE CONSTRUCTED OF A ONE PIECE DESIGN AND SHALL BE U.L. AND OR AGA APPROVED AS REQUIRED BY LOCAL AUTHORITIES.
14. ADEQUATELY SUPPORT ALL PIPE AGAINST SAGGING, POCKETING, SWAYING AND DISPLACEMENT. PROPERLY SPACE AND APPLY HANGERS PER CODE.
15. CONTRACTOR SHALL ROUGH-IN ALL WASTES AND SUPPLIES TO SPECIAL EQUIPMENT ACCORDING TO MANUFACTURER'S SHOP DRAWINGS AND MAKE FINAL CONNECTIONS. ALL SUPPLIES SHALL BE VALVED.
16. GENERAL, MECHANICAL, ELECTRICAL AND PLUMBING CONTRACTORS AND SUB-CONTRACTORS SHALL COORDINATE THEIR WORK PRIOR TO INSTALLATION TO PROVIDE FOR PROPER CLEARANCES BETWEEN EQUIPMENT, DUCTWORK, PIPING, JOISTS, CEILINGS, ETC.
17. WATER PIPING SHALL BE TYPE 'L' FOR ABOVE GROUND. CONFORMING TO ASTM B-88-83.
18. ALL HOT WATER PIPING SHALL HAVE 1/2" THICK CLOSED-CELL INSULATION, APPLIED AS PER MFG.'S RECOMMENDATIONS.

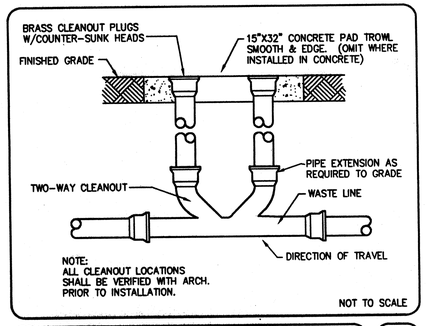

2-WAY SURFACE CLEANOUT 1/P-1

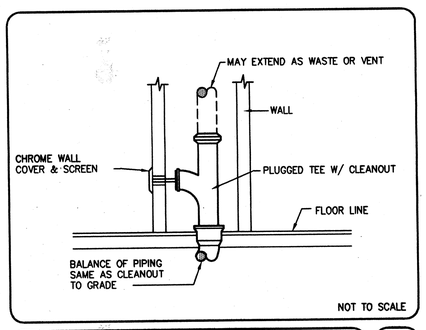

WALL CLEANOUT 2/P-1

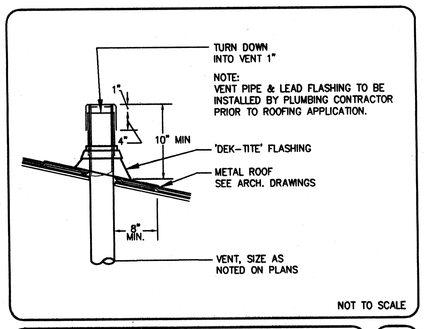

VENT THRU ROOF (METAL) 3/P-1

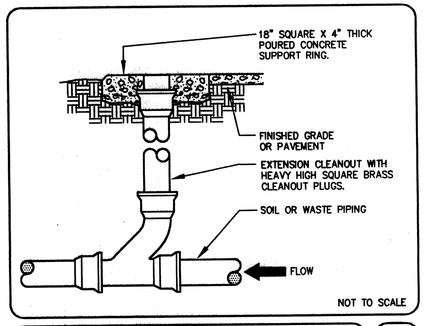

FLOOR CLEANOUT 4/P-1

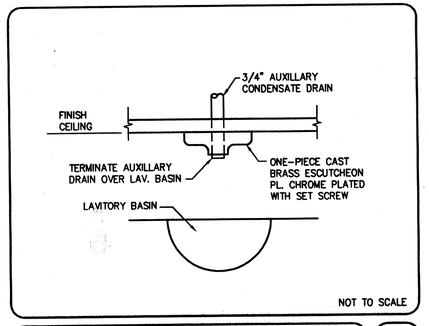

AUX. DRAIN LINE TERMINATION 5/P-1

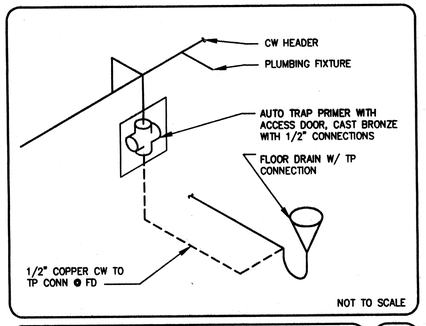

TRAP PRIMER 6/P-1

PLUMBING PIPING LEGEND

	COLD WATER
	HOT WATER
	HOT WATER RECIRCULATION
	WASTE LINE
D	CONDENSATION DRAIN
G	GAS LINE

WATER CALCULATIONS

STREET PRESSURE 80 P.S.I.
HORIZONTAL PIPE LENGTH (METER TO LAST FIXTURE) ---- 140 FT
VERTICAL RISE TAP TO HIGHEST FIXTURE ---------- 7 FT
EQUIVALENT LENGTH OF FITTING ---------- 70 FT
TOTAL DEVELOPED LENGTH ---------- 217 FT

HEIGHT 7 x .43 = 3 P.S.I. LOSS (STATIC)
TOTAL FIXTURE UNITS 48 GPM 35

SIZE	DEVICE	P.S.I.		
1 1/2"	METER & B.F.P.	10	STREET PRESSURE	80
	STATIC	3	TOTAL LOSS	-23
	FIXTURE	10	DEFFERENCE	57
	TOTAL -----	23		

(DIFFERENCE 57 x 100 = 5700) ÷ (TOTAL LENGTH 217)
EQUALS 26.2 ALLOWABLE PRESSURE DROP, PER 100 FT. PIPE.
(SIZE @ 3.0 P.S.I. / 100 FT.)

YAVAPAI ENGINEERING DESIGN SERVICES
300 E. WILLIS SUITE B
PRESCOTT, AZ. 86301
PH. (520) 776-4900
FAX (520) 776-7800

FILE #A98053P1

ENGINEERING / ENVIRONMENTAL SERVICES BUILDING
CITY OF PRESCOTT
NORTH VIRGINIA STREET PRESCOTT, ARIZONA

P-1

BAUMAUK ARCHITECTURE INC.
111 PARK AVENUE
PRESCOTT, ARIZONA
(520) 445-6920 TEL
(520) 445-6921 FAX

PLUMBING PIPING LEGEND

	COLD WATER
	HOT WATER
	HOT WATER RECIRCULATION
	WASTE LINE
D	CONDENSATION DRAIN
G	GAS LINE

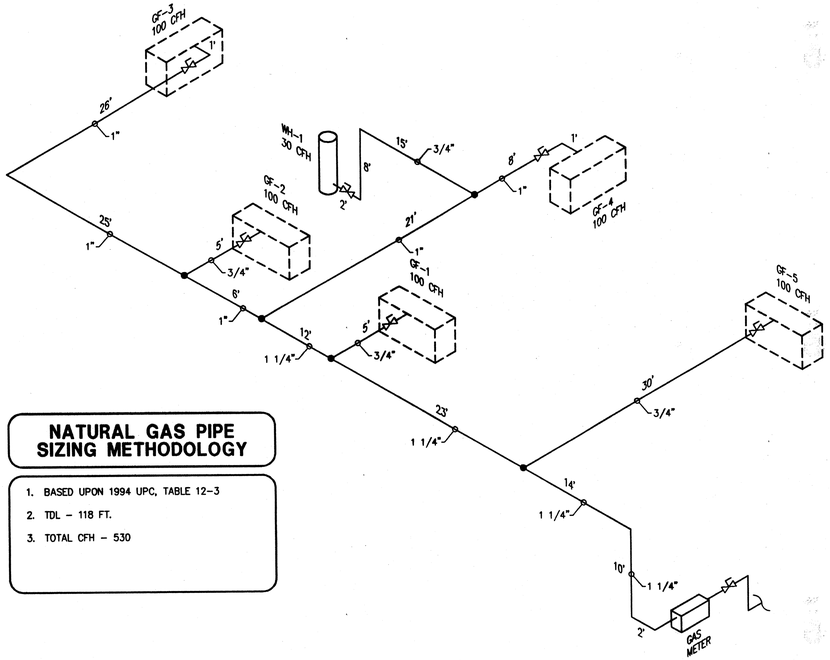

NATURAL GAS PIPE SIZING METHODOLOGY

1. BASED UPON 1994 UPC, TABLE 12-3
2. TDL – 118 FT.
3. TOTAL CFH – 530

SCHEMATIC - NATURAL GAS PIPING (2/P-2)

SCALE: N.T.S.

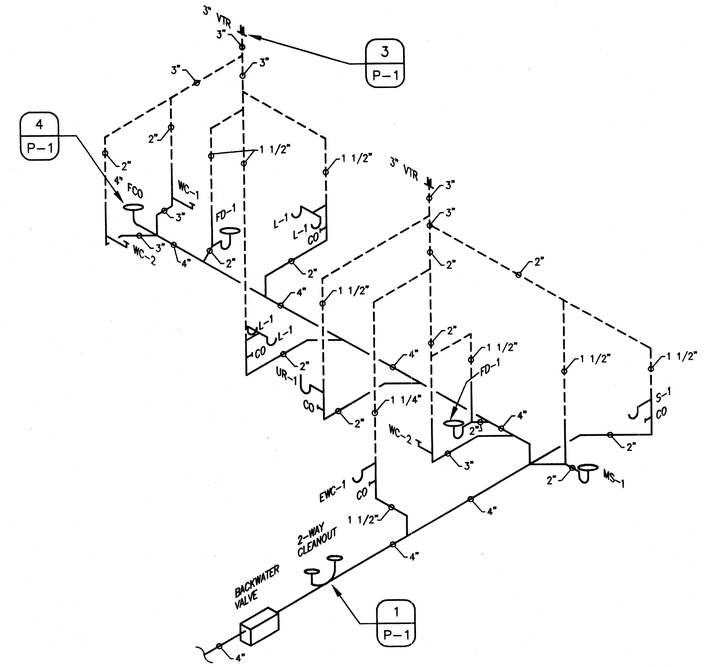

SCHEMATIC - WASTE & VENT (1/P-2)

SCALE: N.T.S.

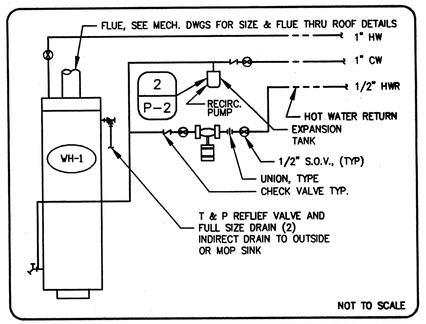

WATER HEATER (GAS) (1/P-2)

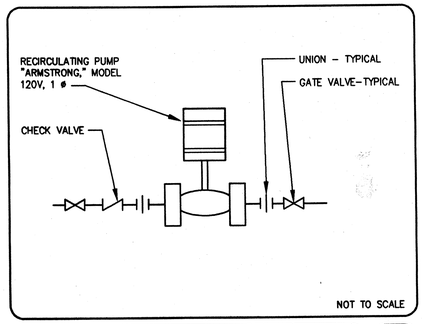

HOT WATER RECIRCULATION PUMP (2/P-2)

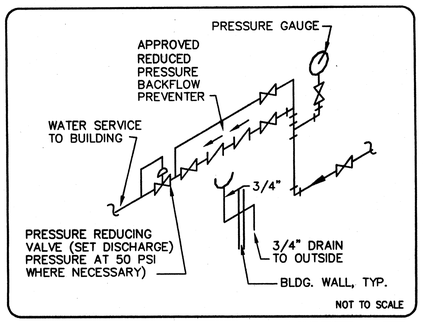

PRV AND BACKFLOW PREVENTER (3/P-2)

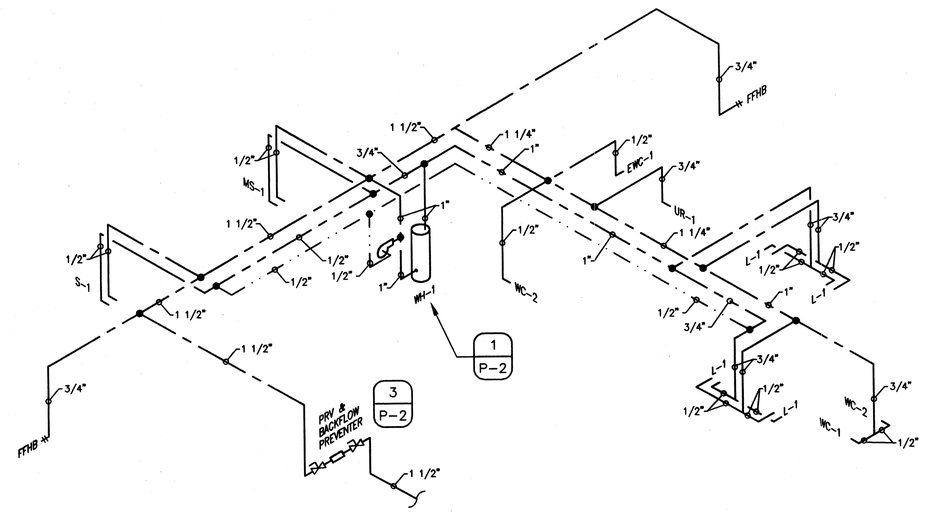

SCHEMATIC - DOMESTIC WATER PIPING (3/P-2)

SCALE: N.T.S.

YEDS JOB NO. 091-98
DRAWN BY: RA
CHECKED BY: SR
SCALE: AS NOTED
DATE: 12-15-98
REVISED: BY:

ENGINEERING / ENVIRONMENTAL SERVICES BUILDING
CITY OF PRESCOTT
NORTH VIRGINIA STREET PRESCOTT, ARIZONA

P-2

BAUMAUK ARCHITECTURE INC.
111 PARK AVENUE
PRESCOTT, ARIZONA
(520) 445-6920 TEL
(520) 445-6921 FAX

YAVAPAI ENGINEERING DESIGN SERVICES
300 E. WILLIS SUITE B
PRESCOTT, AZ. 86301
PH. (520) 776-4900
FAX (520) 776-7800

FILE #A98053P2

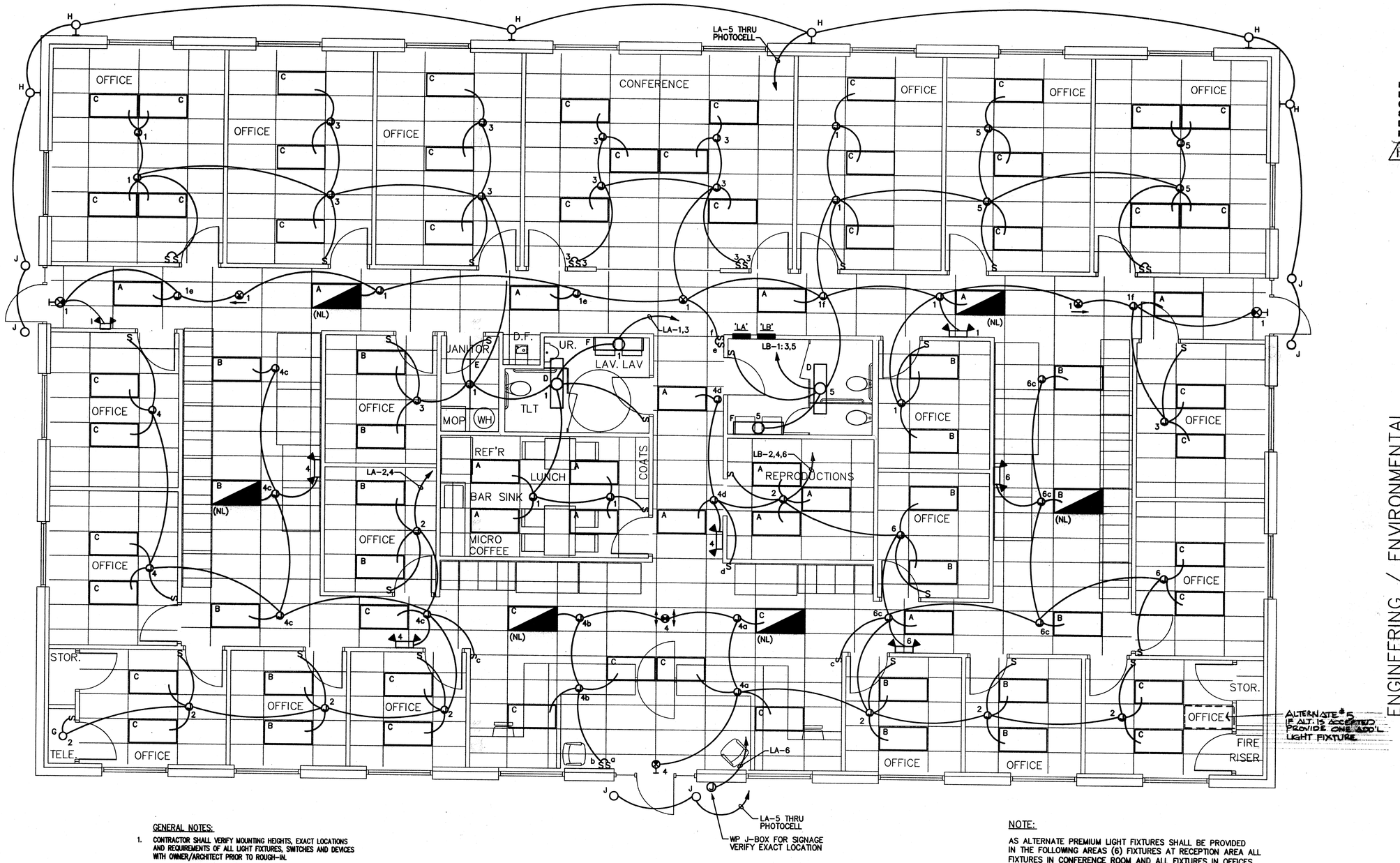

GENERAL NOTES:

1. CONTRACTOR SHALL VERIFY MOUNTING HEIGHTS, EXACT LOCATIONS AND REQUIREMENTS OF ALL LIGHT FIXTURES, SWITCHES AND DEVICES WITH OWNER/ARCHITECT PRIOR TO ROUGH-IN.
2. ALL EMERGENCY FIXTURES AND EXIT SIGNS SHALL BE CONNECTED TO UNSWITCHED LEG OF CIRCUIT.
3. NIGHT LIGHTS TO HAVE ONLY TWO LAMPS REMAINING ON AT ALL TIMES.

LIGHTING – FLOOR PLAN

1/4" = 1' 0"

NORTH

NOTE:

AS ALTERNATE PREMIUM LIGHT FIXTURES SHALL BE PROVIDED IN THE FOLLOWING AREAS (6) FIXTURES AT RECEPTION AREA ALL FIXTURES IN CONFERENCE ROOM AND ALL FIXTURES IN OFFICES. NUMBER OF LAMPS WILL REMAIN AS SPECIFIED ON FIXTURE SCHEDULE.
PREMIUM FIXTURE TYPES: (PARABOLIC TROFFERS)
TYPE A – LITHONIA 2PM4 G B 232 12LD FOR (2) LAMP FIXTURES
TYPE B – LITHONIA 2PM4 G B 332 18LD FOR (3) LAMP FIXTURES
TYPE C – LITHONIA 2PM4 G B 432 32LD FOR (4) LAMP FIXTURES

BAI JOB NO. -
DRAWN BY: RA
CHECKED BY: DAT
SCALE: AS NOTED
DATE: 12-01-98
REVISED: BY:
1 1-12-99 ISSUED FOR BID

ENGINEERING / ENVIRONMENTAL SERVICES BUILDING
CITY OF PRESCOTT
NORTH VIRGINIA STREET PRESCOTT, ARIZONA

E-1

BAUMRUK ARCHITECTURE INC.
111 PARK AVENUE
PRESCOTT, ARIZONA
(520) 445-6920 TEL
(520) 445-6921 FAX

Registered Professional Engineer (Electrical) Certificate No. 32861 DONALD A. TULEY Date Signed 12/1/98 ARIZONA, U.S.A.

ELECTRICAL DESIGN & CADD SERVICES
300 E. WILLIS, SUITE B
PRESCOTT, AZ. 86301
PH. (520) 776-4900
FAX (520) 776-7800
E-MAIL: YEDS@NORTHLINK.COM

FILE #A98123E1

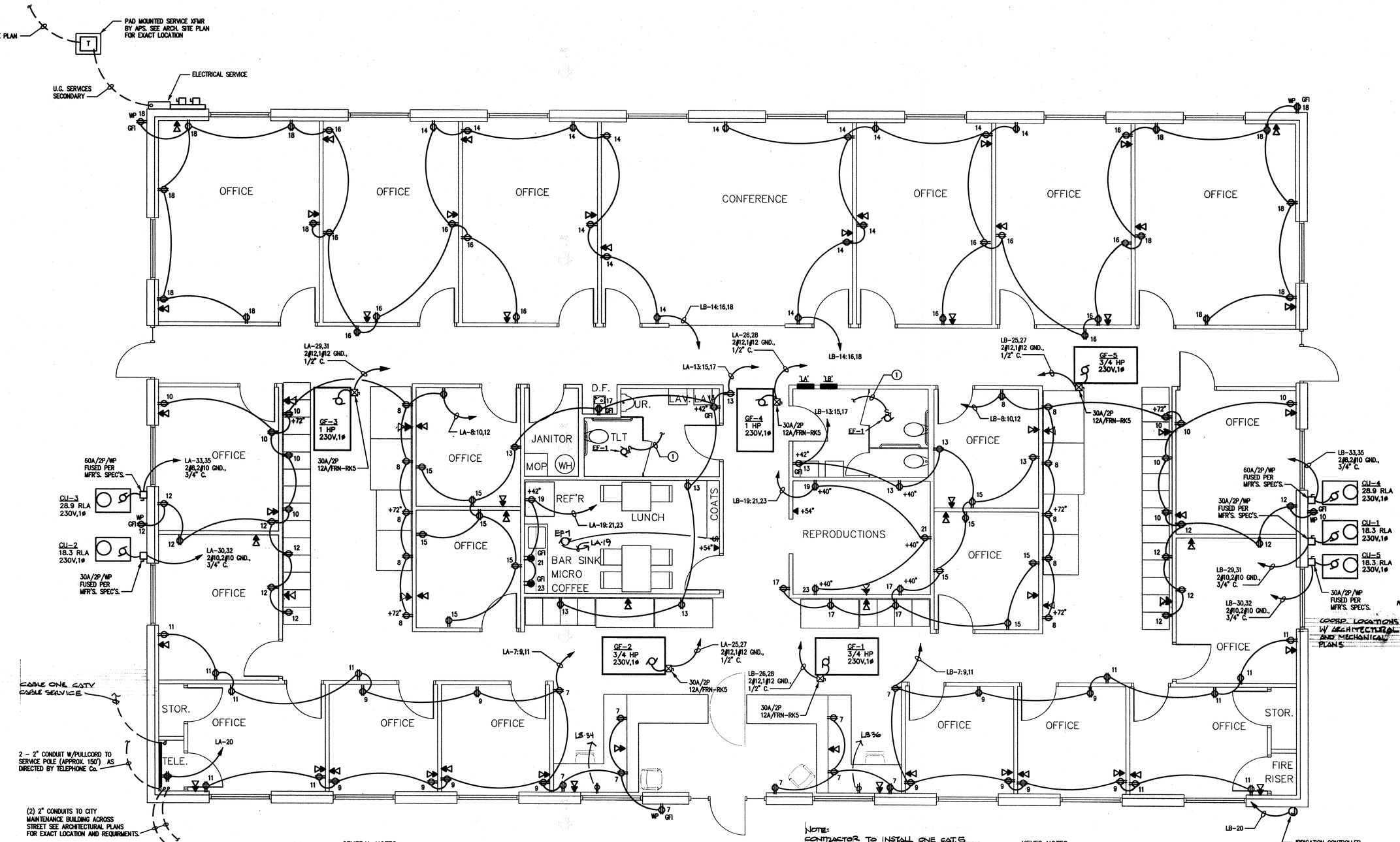

GENERAL NOTES:

1. CONTRACTOR SHALL VERIFY MOUNTING HEIGHTS, EXACT LOCATIONS AND REQUIREMENTS OF ALL DEVICES AND EQUIPMENT WITH OWNER/ ARCHITECT PRIOR TO ROUGH-IN.
2. CONTRACTOR TO PROVIDE A COMPLETE OPERATIONAL FIRE ALARM SYSTEM AS REQUIRED BY APPLICABLE CODE. VERIFY (FACP) LOCATION AND CONNECT TO CIRCUIT LA-24
3. CONTRACTOR TO STUB-UP (2) - 3/4" EMPTY CONDUITS FROM PANELS 'LA' & 'LB' UP INTO CEILING SPACE FOR FUTURE USE.

NOTE:
CONTRACTOR TO INSTALL ONE CAT.5 DATA CABLE AND ONE 4 PR. TELE CABLE AT EACH DATA / TELE OUTLET LOCATION SHOWN. EACH RUN TO HOMERUN TO "TELE" ROOM AT N.W. CORNER OF BUILDING. CABLES TO PROVIDED BY OWNER, CONTR. INSTALLED

KEYED NOTES

1. CONNECT EXH. FAN TO AND SWITCH WITH LIGHTS IN ROOM.

POWER - FLOOR PLAN
1/4" = 1' 0"

NORTH

Registered Professional Engineer (Electrical) CERTIFICATE NO. 32861 DONALD A. TULEY Date Signed 12/8/98 ARIZONA, U.S.A.

ELECTRICAL DESIGN & CADD SERVICES
300 E. WILLIS, SUITE B
PRESCOTT, AZ. 86301
PH. (520) 776-4900
FAX (520) 776-7800
E-MAIL: YEDS@NORTHLINK.COM

FILE #A98123E2

BAI JOB NO.
DRAWN BY: RA
CHECKED BY: DAT
SCALE: AS NOTED
DATE: 12-01-98
REVISED: BY:
1 1-10-99 RJB ISSUED FOR BID

ENGINEERING / ENVIRONMENTAL SERVICES BUILDING
CITY OF PRESCOTT
NORTH VIRGINIA STREET PRESCOTT, ARIZONA

E-2

BAUMRUK ARCHITECTURE INC.
111 PARK AVENUE
PRESCOTT, ARIZONA
(520) 445-6920 TEL
(520) 445-6921 FAX

ELECTRICAL SYMBOLS

NOTE: NOT ALL SYMBOLS ARE USED ON THIS PROJECT

- A / a — FLUORESCENT FIXTURE, WITH FIXTURE DESIGNATED BY LETTER. SMALL LETTER INDICATES SWITCH LEG
- NL — NIGHT LIGHT– NOT SWITCHED
- FLUORESCENT STRIP FIXTURE. VOLTAGE AS INDICATED
- CEILING OR WALLMOUNTED FIXTURE.
- PC — PORCELAIN PULL CHAIN FIXTURE
- J — JUNCTION BOX –(4"SQ) MOUNTED @ +12" AFF UNO
- J — JUNCTION BOX WITH FLEX CONNECTION.
- SINGLE FACE EXIT SIGN– NOT SWITCHED
- DOUBLE FACED EXIT SIGN– NOT SWITCHED.
- TWO HEAD EMERGENCY LIGHT WITH BATTERY.
- S_4 — 4–WAY SWITCH +48" AFF (20A–120/277V)
- S_P — SWITCH AND PILOT LIGHT (20A–120–/277V)
- S_F — FUSTAT HOLDER WITH SWITCH ADAPTER AND FUSTAT AS REQ'D.
- S_K — SINGLE POLE SWITCH, KEY OPERATED (20A)
- S — SINGLE POLE SWITCH, + 48" A.F.F. (20A–120/277V)
- S_3 — THREE WAY SWITCH, + 48" A.F.F. (20A–120/277V)
- S_a — OUTLET CONTROL INDICATOR
- S_D — DIMMER CONTROL, + 48" A.F.F. TYPE, RATING AS NOTED
- T — OUTLET FOR THERMOSTAT–VERIFY LOCATION WITH MECHANICAL PLANS
- DUPLEX RECEPTACLE, + 18" A.F.F. (20A)
- DUPLEX RECEPTACLE ABOVE COUNTER, VERIFY HEIGHT. (20A)
- FOURPLEX RECEPTACLE, + 18" A.F.F. (20A)
- HALF SWITCHED DUPLEX RECEPTACLE (20A)
- RECSP — SIZE/TYPE AS NOTED
- EXPLOSION–PROOF SEAL–OFF
- POWER / PHONE / DATA FLUSH FLOOR OUTLET
- TELEPHONE OUTLET PLASTER RING AT + 18" A.F.F. HUBBELL #P12 COVERPLATE. 3/4"C TO CEILING SPACE W/ 90° ELBOW ~~WHERE SHOWN~~ WITH HOMERUNS. ~~OWNER FURNISHED CONTRACTOR INSTALLED CABLE~~
- DATA SYSTEM OUTLET, 4" SQUARE BOX AND COVERPLATE, + 18" A.F.F. 3/4" C. TO CEILING SPACE W/ 90° ELBOW ~~WHERE SHOWN~~ WITH HOMERUN. ~~OWNER FURNISHED, CONTRACTOR INSTALLED CABLE~~
- TELE/DATA COMBO OUTLET, 4" SQUARE BOX AND COVERPLATE, + 18" A.F.F. 3/4" C. TO CEILING SPACE W/ 90° ELBOW ~~WHERE SHOWN~~ WITH HOMERUN. ~~OWNER FURNISHED, CONTRACTOR INSTALLED CABLE~~
- TELEVISION OUTLET PLASTER RING AT + 18" A.F.F. HUBBELL COVERPLATE. 3/4"C TO CEILING SPACE UNLESS SHOWN WITH HOMERUNS.
- T — TELPHONE SYSTEM CONDUIT HOMERUN WITH NYLON PULLWIRE (1"C MIN UNO)
- REMOTE CONTROL STATION
- DISCONNECT SWITCH, FUSE PER EQUIPMENT MANUFACTURERS RECOMMENDATION. OUTSIDE NEMA 3R – N.F. = NON–FUSED.
- COMBINATION STARTER AND FUSIBLE DISCONNECT SWITCH SIZE AS NOTED
- MOTOR
- ST — THERMAL PROTECTED SWITCH
- HEAT STRIP
- MOTOR STARTER – SHADING INDICATES F.B.O.
- DISTRIBUTION PANELBOARD.
- BRANCH CIRCUIT PANELBOARD.
- CONDUIT BELOW FLOOR OR UNDERGROUND
- CONDUIT IN WALL OR ABOVE CEILING
- LA 1,3 — HOMERUN TO PANEL, NEUTRAL AND PHASE WIRING DESIGNATION (SEE GROUNDING NOTE)
- CONDUIT TURNING UP
- CONDUIT TURNING DOWN
- CONDUIT STUB–OUT, MARK AND CAP AS DIRECTED
- EX — DENOTES EXISTING CONDUIT, WIRE TO REMAIN UNO
- GROUND WIRE (SIZE AS NOTED) EXTENDED AND CONNECTED TO APP'D GROUND

E	EXISTING LIGHT OR DEVICE TO REMAIN
RE	EXISTING LIGHT OR DEVICE TO BE REMOVED OR RELOCATED
ER	RELOCATED LIGHT OR DEVICE
A.F.F.	ABOVE FINISHED FLOOR (℄ OF OUTLET)
A.F.G.	ABOVE FINISHED GRADE (℄ OF OUTLET)
I.G.	ISOLATED GROUND.
E.C.	EMPTY CONDUIT
G.F.I.	GROUND FAULT INTERRUPTER
WP	WEATHERPROOF
NF	NON–FUSED
MCC	MOTOR CONTROL CENTER
UNO	UNLESS OTHERWISE NOTED
FBO	FURNISHED BY OTHERS
NL	NIGHT LIGHT
XP	EXPLOSION PROOF
TYP	TYPICAL
EDF	ELECTRIC DRINKING FOUNTAIN
TMB	TELEPHONE MOUNTING BOARD
TTC	TELEPHONE TERMINAL CABINET
SES	SERVICE ENTRANCE SECTION
EF	EXHAUST FAN

PANELBOARD LA SCHEDULE

MAINS: 200A/MLO
VOLTAGE: 120/240V–1Ø–3W
TYPE: PLUG–IN
LOAD–VA
LOCATION: CORRIDOR
MOUNTING: FLUSH
MIN. A.I.C.: 10,000

CIRCUIT DESCRIPTION	BKR.	CIR. NO.	ØA	ØC	CIR. NO.	BKR.	CIRCUIT DESCRIPTION
* LIGHTS & FAN	20/1	1	2340		2	20/1	LIGHTS *
			1450				
*		3		1500	4		*
				1425			
* (EXTERIOR)		5	1200		6		SIGNAGE *
			1000				
RECEPTS		7		900	8		RECEPTS
				1080			
		9	1080		10		
			1080				
		11		1080	12		
				1080			
		13	1080		14		
			1260				
		15		1080	16		
				1260			
		17	600		18		
			1260				
(REFRIG)		19		600	20		TELE. EQUIP
				500			
(COFFEE MACH)		21	1200		22		SPARE
(MICROWAVE)		23		1200	24		(FACP) FIRE ALARM CONTROL PANEL
				200			
HVAC UNIT GF–2	20/2	25	795		26	20/2	HVAC UNIT GF–4
			920				
		27		795	28		
				920			
HVAC UNIT GF–3	20/2	29	920		30	40/2	COND'G. UNIT CU–2
			2105				
		31		920	32		
				2105			
COND'G. UNIT CU–3	60/2	33	4155		34		SPACE
		35		4155	36		
SPACE		37			38		
		39			40		
		41			42		
TOTAL LOAD PER PHASE:			22455	20800	HI@ A=224355VA/115V = 195.3A		

PANELBOARD LB SCHEDULE

MAINS: 400A/MLO
VOLTAGE: 120/240V–1Ø–3W
TYPE: PLUG–IN
LOAD–VA
LOCATION: CORRIDOR
MOUNTING: FLUSH
MIN. A.I.C.: 10,000

CIRCUIT DESCRIPTION	BKR.	CIR. NO.	ØA	ØC	CIR. NO.	BKR.	CIRCUIT DESCRIPTION
* LIGHTS	20/1	1	1575		2	20/1	LIGHTS *
			1300				
*		3		1600	4		*
				1440			
* & FAN		5	2400		6		*
			1325				
RECEPTS		7		900	8		RECEPTS
				1080			
		9	1080		10		
			1080				
		11		1080	12		
				1080			
		13	720		14		
			1440				
		15		900	16		
				1260			
		17	720		18		
			1260				
		19		900	20		IRRIGATION CONTROLLER
				200			
		21	800		22		SPARE
		23		800	24		
HVAC UNIT GF–5	20/2	25	795		26	20/2	HVAC UNIT GF–1
			795				
		27		795	28		
				795			
COND'G.UNIT CU–1	40/2	29	2105		30	40/2	COND'G UNIT CU–5
			2105				
		31		2105	32		
				2105			
COND'G. UNIT CU–4	60/2	33	4155		34	20/1	~~SPARE~~ RECEPT.
*			FBO				
		35		4155	36	20/1	RECEPT.
				FBO			
SPACE		37			38		SPACE
		39			40		
		41			42		
TOTAL LOAD PER PHASE:			23658	20895	HI@ A=236585VA/115V = 205.7A		

PANELBOARD SYMBOLS

* CONTINUOUS DUTY/LARGEST MOTOR @ 125%

LIGHTING FIXTURE SCHEDULE

TYPE	MANUFACTURER AND MODEL NO.	VOLTS	LAMPS	MOUNTING	FINISH	REMARKS
A	LITHONIA 2SP G 232 A12125 120 ES	120	(2)F32T8/SP35	RECESSED GRID	STANDARD	2' X 4' FLUORESCENT TROFFER WITH .125 PRISMATIC LENS
B	LITHONIA 2SP G 332 A12125 120 ES	120	(3)F32T8/SP35	RECESSED GRID	STANDARD	SAME AS TYPE 'A'
C	LITHONIA 2SP G 432 A12125 120 ES	120	(4)F32T8/SP35	RECESSED GRID	STANDARD	2"x4' FLUOR WRAPAROUND WITH PRIS. DIFFUSER
D	LITHONIA L13 232 120 ES	120	(2)F32T8/SP35	SURFACE	STANDARD	10"x4' FLUOR WRAPAROUND WITH PRIS. DIFFUSER
E	LITHONIA UN 232 120 ES	120	(2)F32T8/SP35	RECESSED GRID	STANDARD	5"x4' HEAVY–DUTY FLUOR STRIP
F	LITHONIA WP 232 120 ES	120	(2)F32T8/SP35	WALL–AT TOP OF MIRROR	STANDARD	4"FLUOR. WALL BRACKET WITH .125" PRIS.UPLIGHT LENS
G	D.M. LIGHTING 1185	120	(1)60W/A–19	SURFACE	WHITE	6" DIA. INCAND. GLOBE ON ALUM COLLAR
H	DALTOR SS/W–100HPS–120	120	(1)100W/HPS	WALL APPROX. 8' – 0" A.F.F.	DARK BRONZE	6"x5 3/4" x 24" LONG EXTERIOR WALL BRACKET
J	LITHONIA AF 2/13DTT 6AR 120	120	(2)F13DTT/30K	RECESSED	CLEAR ALZAK	6"DIA. COMP. FLR DOWNLT.SUITABLE FOR DAMP LOC.,0' STARTING, HPF
⊗	LITHONIA LESIR 120 EL N	120	LED–FURNISHED WITH UNIT	WALL OR CLG. AS SHOWN	ALUM. HOUSING RED LETTERS	EMERGENCY EXIT SIGN W/NI–CAD BATTERY
	LITHONIA 6ELM2P N H	120	(2)8W TUNG. HALOGEN	WALL–6" FROM CLG. TO TOP	STANDARD	6 VOLT EMERGENCY LIGHT WITH NI–CAD BATTERY

LOAD RECAP

	ØA	ØB
PANEL 'LA' =	195.3A	180.9A
PANEL 'LB' =	205.7A	181.7A
SERVICE TOTAL =	401.0A	362.6A

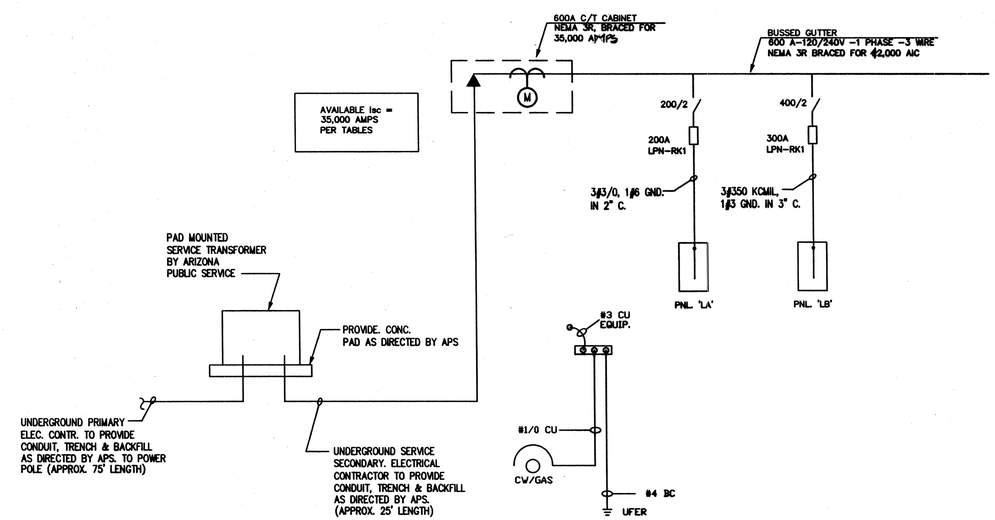

ONE LINE DIAGRAM

N.T.S.

BAI JOB NO. -
DRAWN BY: RA
CHECKED BY: DAT
SCALE: AS NOTED
DATE: 12-01-98
REVISED: BY:
1 1-10-99 ISSUED FOR BID

ENGINEERING / ENVIRONMENTAL SERVICES BUILDING
CITY OF PRESCOTT
NORTH VIRGINIA STREET PRESCOTT, ARIZONA

E-3

Registered Professional Engineer (Electrical) CERTIFICATE NO. 32861 DONALD A. TULEY Date Signed 12/31/98 ARIZONA, U.S.A.

ELECTRICAL DESIGN & CADD SERVICES
300 E. WILLIS, SUITE B
PRESCOTT, AZ. 86301
PH. (520) 776–4900
FAX (520) 776–7800
E–MAIL: YEDS@NORTHLINK.COM

FILE #A98123E3

BAUMAUK ARCHITECTURE INC.
111 PARK AVENUE
PRESCOTT, ARIZONA
(520) 445-6920 TEL
(520) 445-6921 FAX

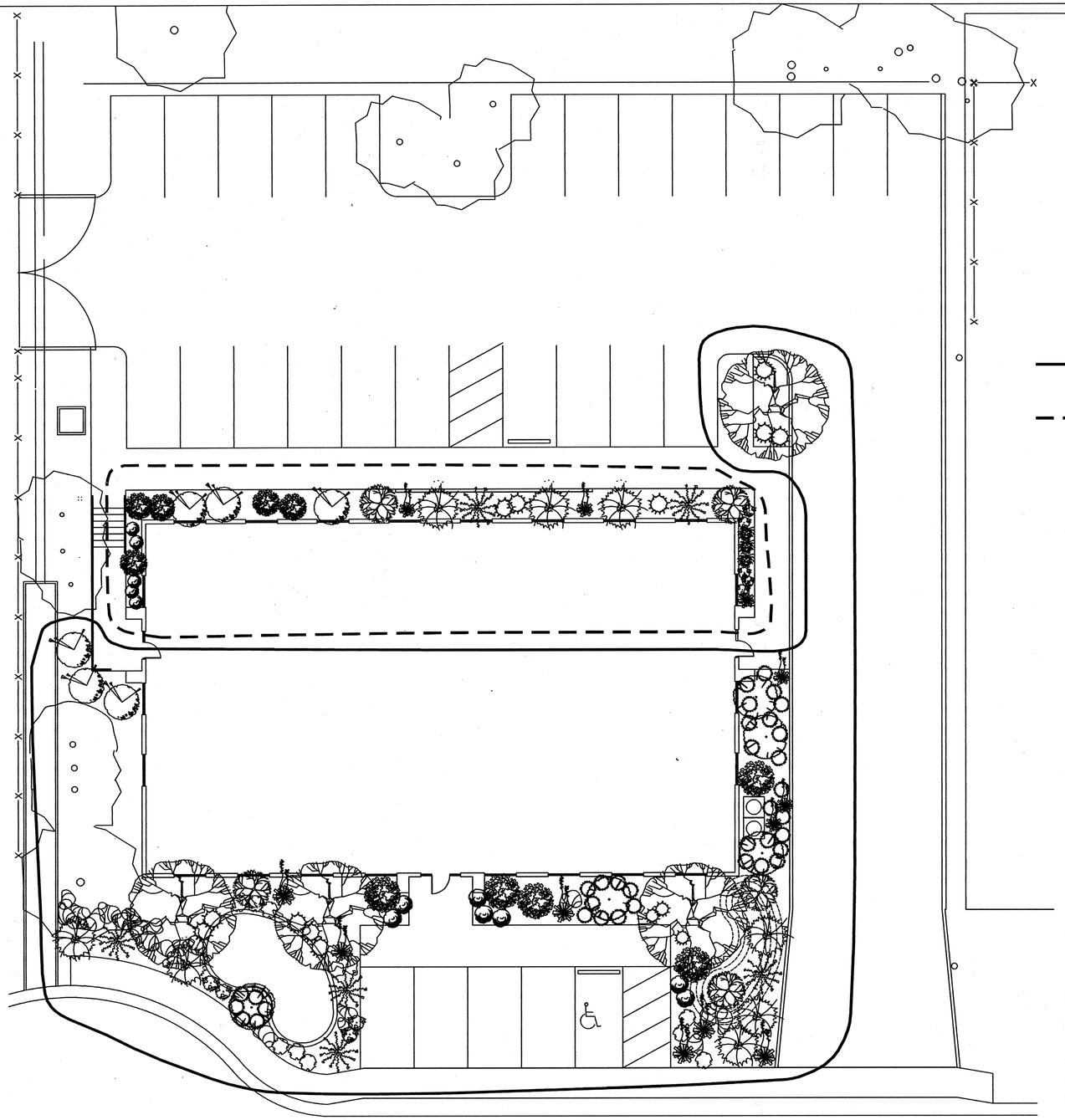

VIRGINIA STREET

1" = 20'

NORTH

NOTE:
CONTRACTOR TO VERIFY LOCATION AND ELEVATION OF EXISTING UTILITIES PRIOR TO CONSTRUCTION.
CONTRACTOR IS RESPONSIBLE FOR COORDINATING ANY NECESSARY UTILITY RELOCATION WITH THE APPLICABLE UTILITY.

CALL TWO WORKING DAYS BEFORE YOU DIG
1-800-STAKE-IT
1-800-782-5348
(OUTSIDE MARICOPA COUNTY)

BASE BID

ADDITIVE ALTERNATE BID

PLANT LEGEND

Quanity	Type	Botanical name / Common name
TREES		
4	24" box	Quercus emoryii Emory oak
2	existing	Ulmus pumila Siberian elm
SHRUBS		
5	5 gal	Foresteria neomexicana New Mexico olive
3BB,2AA	5 gal	Cercocarpus montanus Mountain mahogany
13BB,5AA	5 gal	Arstostaphylos pungens Pointleaf manzanita
0BB,3AA	5 gal	Rosa sp. "scarlet meidiland" Meidiland rose
4BB,2AA	5 gal	Nolina microcarpa Beargrass
9BB,3AA	5 gal	Hesperaloe parviflora Red yucca
5BB,3AA	5 gal	Fallugia paradoxa Apache plume
3BB,3AA	5 gal	Ribes aureum Golden currant
GROUND COVER		
7BB,5AA	1 gal	Mahonia repens Creeping Mahonia
6BB,3AA	1 gal	Verbena goodingii Gooding's verbena
9	1 gal	Ratibida columnifera Mexican hat
35	1 gal	Oenothera berlandiera Mexican evening primrose
11BB,3AA	1 gal	Salvia greggii Autumn sage
TURFGRASS		
300 Sq. Ft.	Seed	Buchloe dactyloides Buffalograss
HARDSCAPE ELEMENTS		
21	2'x3'	Granite Boulders
2		Flagstone Steppping Stones

GENERAL NOTES:

1. IRRIGATION SYSTEM BATTERY POWERED ELECTRONIC CONTROLLER TO BE "DIG" MODEL 2007 OR EQUAL
2. PRESSURE VACUUM BREAKER TO BE "EWING" MODEL 765BV OR EQUAL.
3. POLYSPUN 350 LANDSCAPE FABRIC OR EQUAL WITH 3" DECOMPOSED GRANITE AND ¾" BUCKSKIN ROCK FOR ALL LANDSCAPED AREAS.

QUANTITIES:
IRRIGATION SYSTEM BASE BID = L.S.
IRRIGATION SYSTEM ADDITIVE ALTERNATE BID = L.S.

CITY OF PRESCOTT
221 South Cortez Street
Prescott, Arizona 86301 (602) 445-3500

PUBLIC WORKS
ENVIRONMENTAL SERVICES
433 NORTH VIRGINIA
LANDSCAPING PLAN

APPROVED

CITY ENGINEER P.E. DATE

DRAWN BD/CADD
DESIGN DSW/BD
CHECKED
FIELD BOOK
SHEET 1 OF 1
DWG. NO.

Revised