CITY OF PRESCOTT
ARIZONA
Everybody's Hometown

Public Works Department

433 N. Virginia Street
Prescott, AZ 86301
(928) 777-1130

ADDENDUM NUMBER ONE

for the

FY17 Pavement Rehabilitation and Preservation Project

DATE OF ADDENDUM: July 29, 2016

TO ALL BIDDERS BIDDING ON THE ABOVE PROJECT:

The following addendum shall be made part of the Project Specifications and Contract Documents. All other provisions of the Contract Documents remain unchanged. The Bidder shall acknowledge receipt of this Addendum on page 17 of the Proposal, in addition to signing below and returning this form with the bid package. The contents of this Addendum shall be given full consideration in the preparation of the Bid.

Clarify Prescott Airport Pavement Repairs

Section 109.11 Contract Allowance (Airport Pavement Repairs portion) is deleted from the bid schedule and replaced with the attached revised bid schedule. This Addendum provides a detailed scope of work and associated revised bid schedule including a bid alternate.

Scope
The Prescott Airport Pavement Repairs consist of the reconstruction of Fuel Road and Loop Road as shown on the attached project plans. The pavement preservation described for the Main Terminal Parking Area is included as a bid alternate.

The bid line items related to this work are included on the attached revised bid schedule. The project plan revisions become part of the project bid documents.

If the bid alternate is awarded, the airport main terminal parking lot shall be completed the week of September 12th to 16th. Pedestrian access will need to be maintained. The parking area will be closed to public parking while the pavement preservation work is completed. Coordination with airport personnel well in advance is critical.

Question 1: One additional question regarding the ARAC pavement on the FY17 Pavement Rehab project. The binder on the TR+ mix you prefer is a PG 70-22 correct?
Answer: Yes, the TR+ mix is PG 70-22 TR+ oil.

Question 2: One section of the specs says the Millings are to be taken to the fair grounds; another says contractors are to dispose of, what is the case for this job.
Answer: The Special Provisions supersede the City's supplement to MAG. Millings are to be disposed of by the contractor per TS 317.

Question 3: Page 31 of the specials calls out a Mean Macrotexture Spec for Milling. Is this to apply to all 3 milling pay items or only the 0.75" mill depth pay item?
Answer: The Special Provision on page 31 applies to all milled areas.

Question 4: In reference to Item 345.1a, there are 162 listed on the bid schedule. Is it anticipated that each and every one of the manhole frames and covers will be replaced? This may affect the start date with such a specialized item.
Answer: The plans and specifications call for all new lids to be installed. If the supplies are limited, these could be replaced with a standard lid or the existing lid until the new ones come in. Rings and covers, if they are the correct style, will be salvaged when possible and reused. On-site inspector will determine which are suitable for reuse.

Question 5: In reference to Item 345.1e, under the normal Detail 391Q it has top lid and debris cap which is common but also brings into the picture, the deeper than 4' step extensions. Are we to assume that every one of those valves require a 4' extension or none?
Answer: None. It will go back like in kind. If there's an extension, it will remain. If there isn't, it doesn't get one.

Question 6: In reference to Item 345.1f, it says to replace and adjust valve box. Is that a whole new valve box, unlike the one above it which is just the top?
Answer: Line Item 345.1f is for Water Meter Box and Cover to include Traffic Rated Lid (Detail 316P). Contractor shall salvage and reuse when possible and replace with new when needed. The on-site inspector will determine which are suitable for reuse. There are some of the rings and covers that will need to be replaced. For others, this will depend on if and how they come out. If the meter boxes don't come out, then the contractor will have to replace whatever portion that can't come out.

Question 7: To recap- on Item 345.1e, we are to figure the top lid, and on Item 345.1f, are we to figure the entire box?
Answer: No, 345.1e is a Water Valve Box and Cover; 345.1f is a Water Meter Box and Cover to include Traffic Rated Lid. See previous answer regarding the removal and reuse of the boxes, covers, lids and rings. If they can be reused, they will be, and if not, they will be replaced.

Question 8: On the sewer manhole adjustments, is there a known quantity of pre-cast manholes or are any of them brick?
Answer: We don't anticipate any brick manholes, but this is unknown for this project. In locations such as Willow Creek, they should not be brick.

Question 9: Will contractors be allowed to unbalance their bid, and if so, will that be acceptable to the City?
Answer: No. We follow MAG's guidance on unbalanced bids.

Question 10: In regard to pavement markings, in the past depending on the surface treatment, we have done some obliterating of the thermoplastic markings. I don't see a provision called out for that in these plans. Can this be addressed so that it can be covered in our bid? Also, will the thermoplastic markings be only for the crosswalk stop bars and symbols?
Answer: Obliterating of stop bars, crosswalks and symbols shall be done in areas to receive Asphalt Concrete Seal Coat Type C – Tire Rubber Modified Slurry Seal (TRMSS). Yes, thermoplastic is only on the stop bars, crosswalks and symbols.

Question 11: Is there any more thermo besides just that?
Answer: No; the roadway striping is paint.

Question 12: In regard to temporary markings, it seems there is double the quantity for temporary striping as there is for permanent striping. To be able to figure out how many times we will need to mobilize, where do you anticipate using the temporary markings?
Answer: Temporary markings will be used after milling, before paving, after paving before permanent striping and/or any time that the permanent striping is obliterated.

Question 13: In reference to Item 405.5, are we replacing those as well, or is this just an adjustment?
Answer: See page 19 of the Special Provisions addresses Section 405.5 with the new Quad City Standard Detail.

Question 14: On the ARAC, do you want the TR plus Asphalt?
Answer: Yes. Also see answer to the first question.

Question 15: On the milling and overlay portion of the work, are we able to mill and then come back in the next day and pave it?
Answer: Yes, you can put traffic on it. When the pavement is milled, temporary striping is required. After the new pavement is applied temporary and permanent striping is required per the specifications.

Question 16: On the cape seal, are you going to try and temp stripe between?
Answer: You may have to, depending on how fast the contractor can cover the chips with the slurry seal. Also see answers to Questions 12 and 15.

Question 17: Will cracks be identified in the field after the milling?
Answer: Yes. The on-site inspector will be there during milling and once it is swept up, they will start marking which cracks are to be filled.

Question 18: In reference to Item 405.5, does that call for domestic steel?
Answer: Note #2 on the 270Q says US manufactured iron.

- END -

City of Prescott, Public Works Department

Henry Hash 7-29-16

Henry Hash, Public Works Director

Acknowledgement: (must be signed and turned in with the bid documents)

_____

Company Name

_____ _____

Signature of Company Official Date

Bidding Schedule

FY17 Pavement Rehabilitation and Preservation Project					
Item	Description	Qty	Unit	Unit Cost	Amount
100.4	Public Relations Allowance	1	Allowance	$48,000.00	$48,000.00
105.8	Construction Staking	1	LS		
109.1	Mobilization	1	LS		
109.11	Contract Allowance	1	Allowance	$450,000.00	$450,000.00
306	Geogrid, Tensar BX-1200, with Filter Fabric	1,800	SY		
317.2a	Mill Asphalt Pavement - 0.75" Nominal Depth	32,000	SY		
317.2b	Mill Asphalt Pavement - 2" Nominal Depth	37,000	SY		
317.2c	Mill Asphalt Pavement - 2.5" Nominal Depth	66,000	SY		
321.8.6	A. C. Pavement Overlay - 2" Thick	37,000	SY		
321.8.7	Pavement Fabric Interlayer	103,000	SY		
321.8.7b	Pavement Fabric Asphalt Binder Coat	25,750	Gallons		
321.15a	Type 1 Pavement Repair	2,400	SF		
321.15b	Type 2 Pavement Repair	8,100	SF		
321.15c	Type 3 Pavement Repair	9,200	SF		
325.12	ARAC Pavement Overlay - 2.5" Thick	66,000	SY		
330.7	Asphalt Chip Seal	8,800	SY		
331.8a	Microsurfacing Dry Aggregate	1,140	TN		
331.8b	Microsurfacing Asphalt Emulsion	148	TN		
332.9	Asphalt Emulsion Slurry Seal	100,000	SY		
334.5	Asphalt Concrete Preservative Seal - TRMSS	98,000	SY		
337.8	Crack Sealing	105,000	LF		
340.4.1a	Concrete Vertical Curb and Gutter Replacement	120	LF		
340.4.1b	Concrete Roll Curb and Gutter Replacement	76	LF		
340.4.2.1	Concrete Handicap Ramp Upgrade	2,000	SF		
340.4.4	Concrete Valley Gutter Replacement	390	SF		
345.1a	Adjust Sewer Manhole Frame and Cover (Dtl. 422Q)	162	EA		
345.1b	Adjust Sewer Cleanout Frame and Cover (Dtl. 270Q)	14	EA		
345.1c	Adjust Telephone Manhole Frame and Cover (Dtl. 422Q)	2	EA		

345.1d	Adjust Storm Drain Frame and Cover (Dtl. 422Q)	9	EA		
345.1e	Adjust Water Valve Box and Cover (Dtl. 391Q)	178	EA		
345.1f	Replace and Adjust Water Meter Box and Cover to Include Traffic Rated Lid (Dtl. 316P)	8	EA		
370	Rubber Chip Seal	100,000	SY		
401.7a	Traffic Control Plan	1	LS		
401.7b	Flaggers	5,400	Hour		
401.7c	Certified Police Personnel Allowance	1	Allowance	$18,000.00	$18,000.00
401.7d	Barricades and Storage	1	LS		
401.7e	Lighted Message Board	200	Day		
401.7f	Pilot Car and Driver	300	Hour		
401.7g	Incidental Traffic Control Related Items	1	LS		
402.2a	Thermoplastic Striping - White	13,600	LF		
402.2b	Thermoplastic Left Turn Arrow	60	EA		
402.2c	Thermoplastic Right Turn Arrow	25	EA		
402.2d	Thermoplastic Thru Arrow	6	EA		
402.2e	Thermoplastic Right/Thru Arrow	4	EA		
402.2f	Thermoplastic Left/Thru Arrow	9	EA		
402.2g	Thermoplastic Shark's Teeth	60	LF		
402.2h	Thermoplastic "YIELD" Legend	5	EA		
402.3a	Temporary Striping - White Paint	208,000	LF		
402.3b	Temporary Striping - Yellow Paint	133,000	LF		
402.3c	Temporary Left Turn Arrow	53	EA		
402.3d	Temporary Right Turn Arrow	19	EA		
402.3e	Temporary Thru Arrow	5	EA		
402.3f	Temporary Right/Thru Arrow	4	EA		
402.3g	Temporary Left/Thru Arrow	9	EA		
402.3h	Temporary Shark's Teeth	60	LF		
402.3i	Temporary Diagonal Parking Stall	105	EA		
402.3j	Temporary Parallel Parking Stall	15	EA		
402.3k	Temporary Handicap Parking Stall	6	EA		
402.3l	Temporary No Parking Stall	1	EA		

402.4a	Permanent Striping - White Paint	106,000	LF		
402.4b	Permanent Striping - Yellow Paint	87,000	LF		
402.4c	Permanent Diagonal Parking Stall	105	EA		
402.4d	Permanent Parallel Parking Stall	18	EA		
402.4e	Permanent Handicap Parking Stall	6	EA		
402.4f	Permanent No Parking Stall	1	EA		
402.4g	Permanent Bike Legend	70	EA		
405.5	Adjust Survey Handhole Frame and Cover (Dtl. 270Q)	173	EA		
	Total FY17 Pavement Rehabilitation and Preservation Bid Amount	**$**			

Prescott Airport Pavement Repairs

Base Bid

Item	Description	Qty	Unit	Unit Cost	Amount
105.8	Construction Staking	1	LS		
109.1	Mobilization	1	LS		
109.11	Contract Allowance	1	Allowance	$10,000.00	$10,000.00
321.15a	Loop Road Pavement Repair	5,600	SF		
321.15a	Fuel Road Pavement Repair	1,900	SF		
401.7a	Traffic Control Plan	1	LS		
401.7b	Flaggers	200	Hour		
401.7d	Barricades and Storage	1	LS		
401.7f	Pilot Car and Driver	60	Hour		
401.7g	Incidental Traffic Control Related Items	1	LS		
	Total Airport Pavement Repairs Base Bid Amount	**$**			

Additive Bid Alternate

Item	Description	Qty	Unit	Unit Cost	Amount
331.8a	Microsurfacing Dry Aggregate	100	TN		
331.8b	Microsurfacing Asphalt Emulsion	13	TN		
401.7a	Traffic Control Plan	1	LS		
401.7b	Flaggers	20	Hour		

Bidding Schedule

401.7d	Barricades and Storage	1	LS		
401.7g	Incidental Traffic Control Related Items	1	LS		
402.2a	Thermoplastic Striping - White	80	LF		
402.3a	Temporary Striping - White Paint	300	LF		
402.3b	Temporary Striping - Yellow Paint	1,000	LF		
402.3i	Temporary Diagonal Parking Stall	100	EA		
402.3k	Temporary Handicap Parking Stall	5	EA		
402.4a	Permanent Striping - White Paint	300	LF		
402.4b	Permanent Striping - Yellow Paint	1,000	LF		
402.4c	Permanent Diagonal Parking Stall	100	EA		
402.4e	Permanent Handicap Parking Stall	5	EA		
Total Airport Pavement Repairs Additive Bid Alternate Amount		**$**			

TOTAL BID

_____ Dollars
(Written Words)

_____ _____
Signature of Company Official Date Signed

_____
Title

_____ _____
Company Name Phone Number

_____ _____
Address Fax Number

_____ _____
City/State Zip Code

FY 2017 AIRPORT PAVEMENT REPAIR PROJECT

INCLUDED IN FY 2017 PAVEMENT REHABILITATION AND PRESERVATION PROJECT NO. CIP16-006

MAYOR
HARRY B. OBERG

CITY COUNCIL
JIM LAMERSON
STEVE BLAIR
GREG LAZZELL
JEAN WILCOX
BILLIE ORR
STEVE SISCHKA

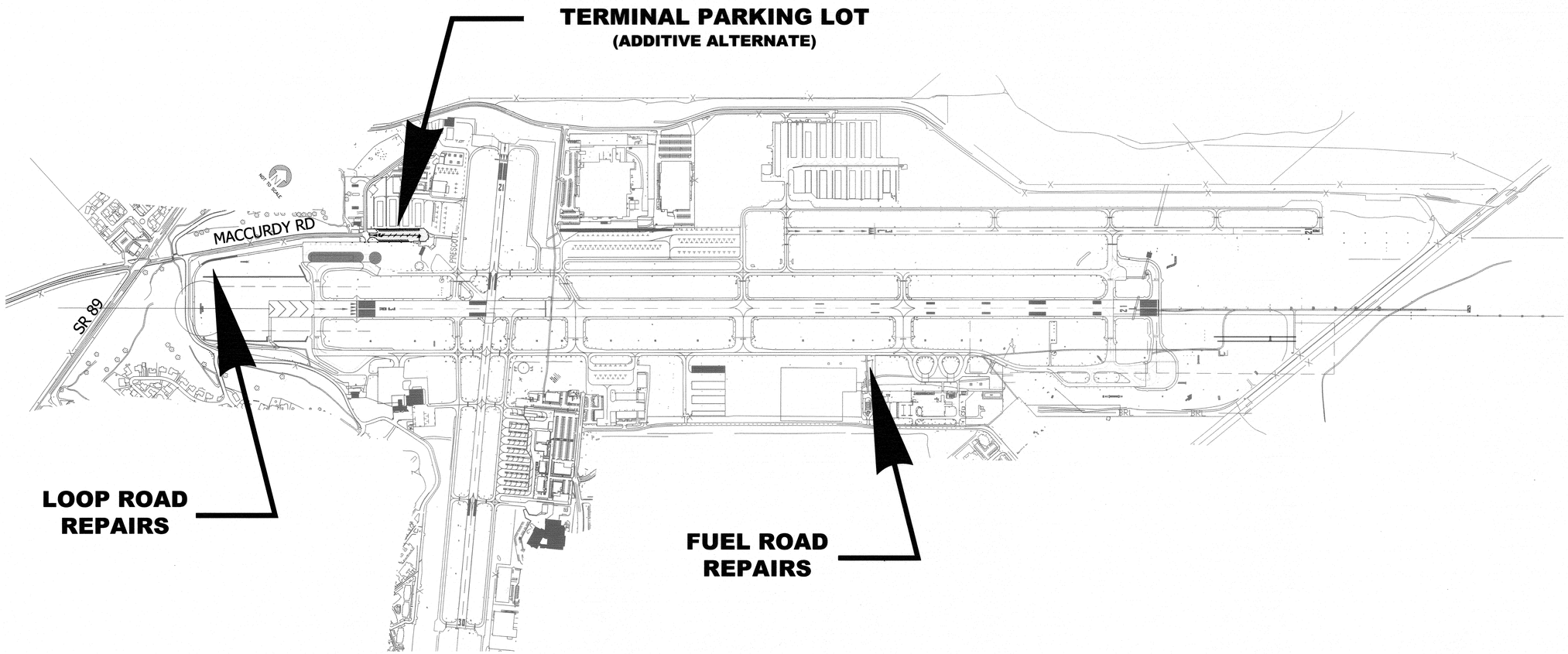

CITY OF PRESCOTT
Everybody's Hometown

APPROVED BY

CITY ENGINEER	DATE 7/29/16
PROGRAM DEVELOPMENT MANAGER	DATE 7/29/16
UTILITIES MANAGER	DATE 7-29-16
AIRPORT MANAGER	DATE 7/29/16

CITY OF PRESCOTT PUBLIC WORKS

TITLE SHEET
FY 2017 AIRPORT PAVEMENT REPAIR PROJECT

DWG. NO. 1
DATE 7/21/16
SHEET NO. 1 OF 3

CITY OF PRESCOTT *Everybody's Hometown*

PREPARED BY GH | CHECKED BY | FOR: COP

Registered Professional Engineer (Civil) CERTIFICATE NO. 39473 GEORGE W. ANDREWS, SR. Date Signed 9/30/2016 ARIZONA U.S.A. Expires 9/30/2016

NO.	BY	DATE	REVISIONS	APPRV	DATE
				CITY	

ENGINEER

REVIEW:

CIP16-005

FILE NAME&PATH: C:\USERS\GEORGE.HENDERSON\DESKTOP\AUTOCAD - GRAPHICS\AIRPORT DRAWINGS\FY17 AIRPORT REPAIRS.DWG

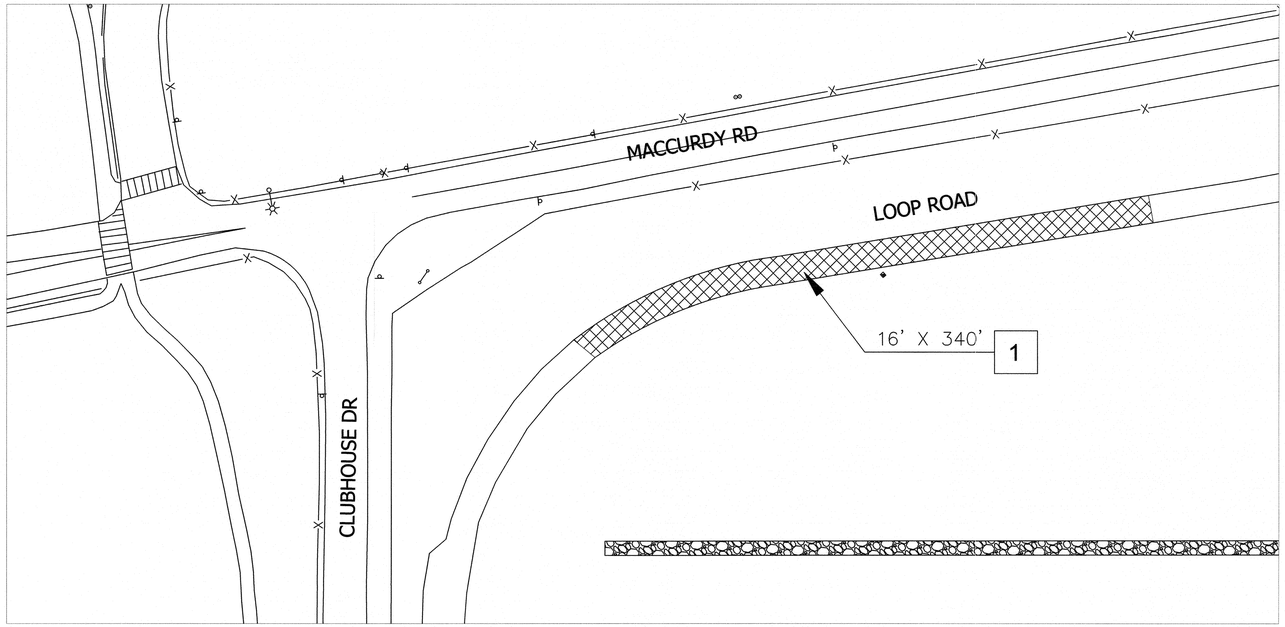

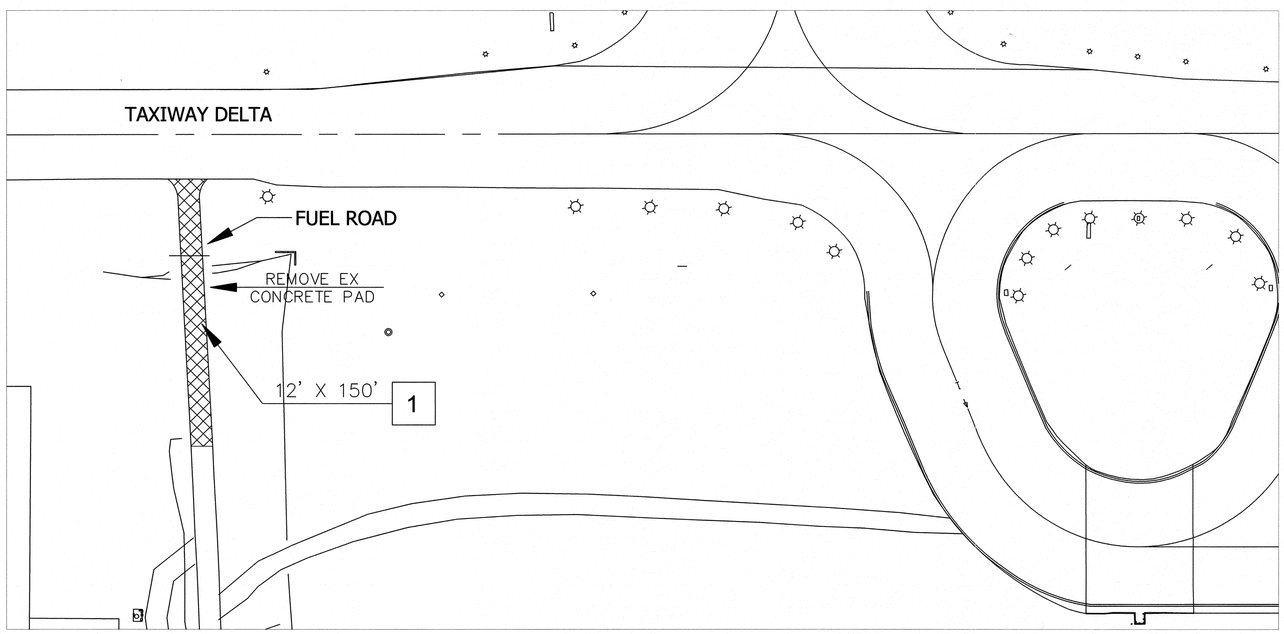

CONSTRUCTION NOTES:

1 AIRPORT PAVEMENT REPAIR – SAWCUT AND REMOVE EXISTING A. C. PAVEMENT, BASE MATERIAL, AND SUBGRADE MATERIAL TO DEPTH NECESSARY TO CONSTRUCT PROPOSED REPAIR. RESTORE EXCAVATION WITH 5" THICK, A. C. PAVEMENT (TYPE 1/2" MIX IN TWO LIFTS), OVER 12" THICK AGGREGATE BASE COURSE, OVER 95% COMPACTED SUBGRADE MATERIAL, WITH THICKENED EDGE PER QUAD CITY STD DETAIL 201Q.

PRIOR TO CONSTRUCTION THE CONTRACTOR SHALL HAVE THE ROADWAY SURVEYED. ROADWAY SHALL BE RESTORED TO NEAR ORIGINAL LINE AND GRADE TO PROVIDE FOR A SMOOTH RIDE WITH ANY IRREGULARITIES REMOVED TO NEATLY JOIN EXISTING ROADWAY.

DWG. NO. 1
DATE 7/21/16
SHEET NO. 2 OF 3

CITY OF PRESCOTT PUBLIC WORKS

FY 2017 AIRPORT PAVEMENT REPAIR PROJECT

LOOP ROAD - FUEL ROAD

CITY OF PRESCOTT
Everybody's Hometown

PREPARED BY GH
CHECKED BY
FOR: COP

Registered Professional Engineer (Civil)
CERTIFICATE NO. 39473
C. WINTHROP ANDREWS, SR
Date Signed 7/21/16
ARIZONA U.S.A.
Expires 9/30/2018

NO.	BY	DATE	REVISIONS	APPRV	DATE
				CITY	

ENGINEER
CIP16-005
REVIEW:

FILE NAME&PATH: C:\USERS\GEORGE.HENDERSON\DESKTOP\AUTOCAD – GRAPHICS\AIRPORT DRAWINGS\FY17 AIRPORT REPAIRS.DWG

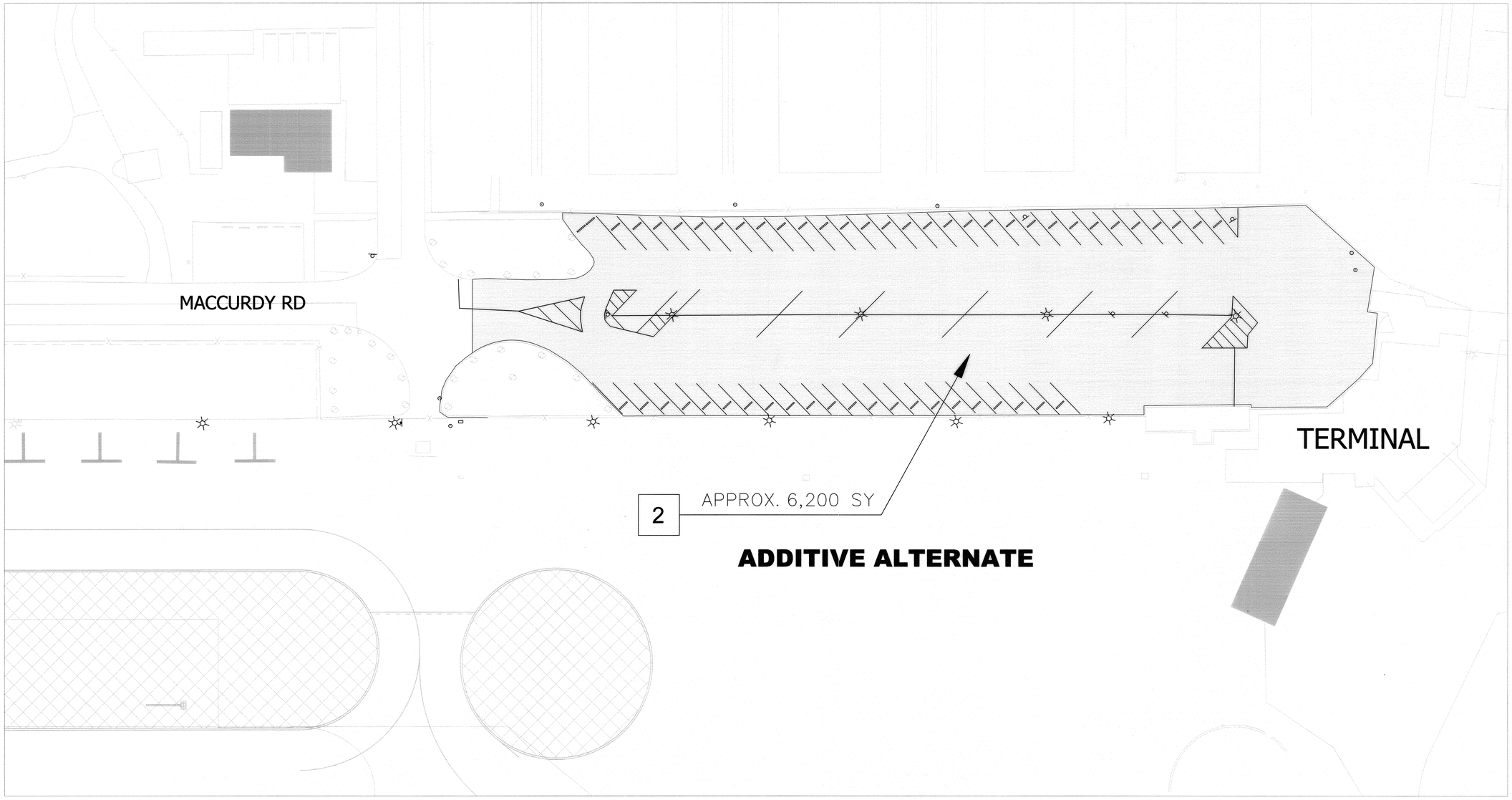

CONSTRUCTION NOTES:

2

PERFORM CRACK SEALING IN ACCORDANCE WITH THE SPECIFICATIONS. THOROUGHLY CLEAN PAVEMENT SURFACE AND CONSTRUCT 3/8" THICK MICROSURFACING SEAL COAT PER MAG SECTION 331 AS MODIFIED IN THE SPECIAL PROVISIONS.

LIMITS OF THE CRACK SEALING SHALL BE DETERMINED IN THE FIELD BY THE COP REPRESENTATIVE.

EXISTING TRAFFIC STRIPING SHALL BE REPLACED IN KIND IN ITS CURRENT CONFIGURATION. TO ENSURE CORRECT CONFIGURATION OF TRAFFIC STRIPING THE CONTRACTOR SHALL HAVE THE EXISTING TRAFFIC STRIPING SURVEYED PRIOR TO CONSTRUCTION AND HAVE THE TRAFFIC STRIPING REINSTALLED WITH SURVEY CONTROL. TEMPORARY STRIPING SHALL BE PLACED UNTIL PERMANENT STRIPING IS INSTALLED.

TRAFFIC STRIPING ON THE PLANS IS SHOWN FOR GENERAL INFORMATION ONLY AND SHALL NOT BE CONSIDERED TRAFFIC STRIPING PLANS.

NO.	BY	DATE	REVISIONS	APPRV	DATE
				CITY	

ENGINEER

REVIEW:

CIP16-005

CITY OF PRESCOTT PUBLIC WORKS

FY 2017 AIRPORT PAVEMENT REPAIR PROJECT

TERMINAL PARKING LOT

DWG. NO. 1

DATE 7/21/16

SHEET NO. 3 OF 3

CITY OF PRESCOTT Everybody's Hometown

PREPARED BY GH | CHECKED BY | FOR: COP

REGISTERED PROFESSIONAL ENGINEER (Civil) CERTIFICATE NO. 39473 C. WINTHROP ANDREWS, SR. Date Signed 9/30/16 ARIZONA U.S.A. Expires 9/30/18

FILE NAME&PATH: C:\USERS\GEORGE.HENDERSON\DESKTOP\AUTOCAD - GRAPHICS\AIRPORT DRAWINGS\FY17 AIRPORT REPAIRS.DWG