CITY OF PRESCOTT

PUBLIC WORKS DEPARTMENT

DRAINAGE IMPROVEMENT PLANS FOR

LAKEVIEW PLAZA 48" STORM DRAIN

CIP 15-001

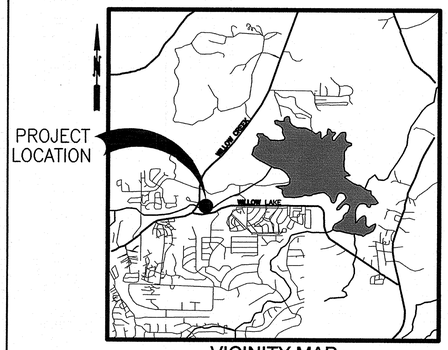

VICINITY MAP
NOT TO SCALE

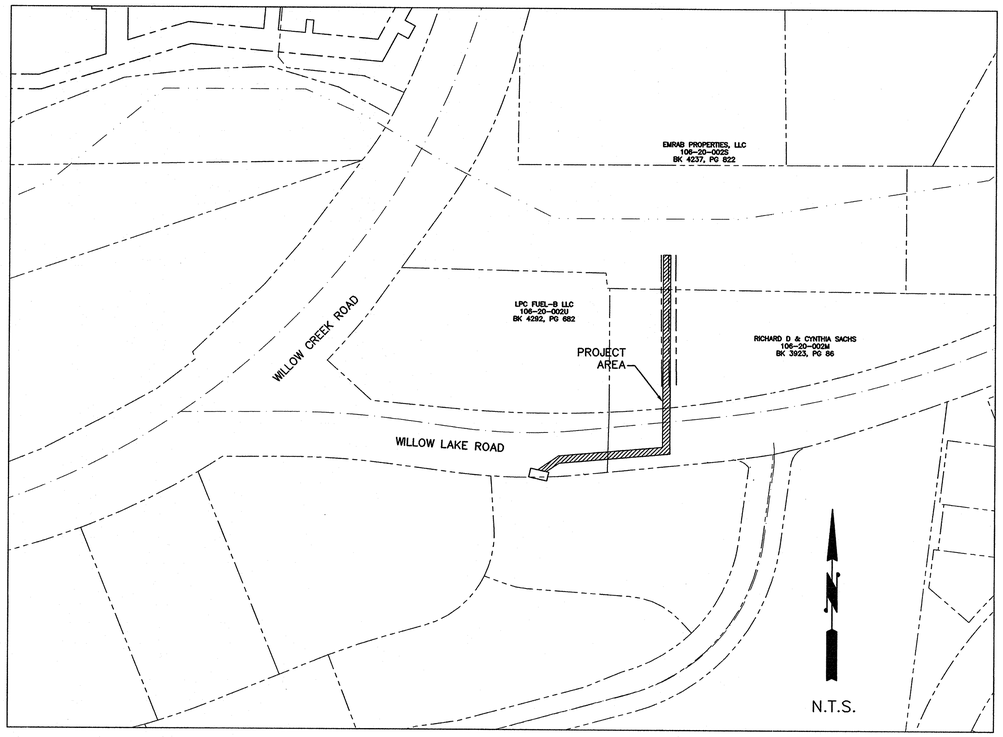

SHEET INDEX

SHEET	DESCRIPTION
1	COVER SHEET
2	GENERAL NOTES
3	LEGEND AND ABBREVIATIONS
4	STORM LAYOUT
5	STORM PLAN AND PROFILE
6	EROSION CONTROL PLAN
7	DETAILS

Registered Professional Engineer (Civil)
CERTIFICATE NO. 39473
C. WINTHROP ANDREWS, SR.
Date Signed 4-17-15
ARIZONA U.S.A.
Expires 9-30-15

APPROVED BY

CITY ENGINEER — DATE 4/27/15

UTILITIES MANAGER — DATE 4/27/15

PROGRAM DEVELOPMENT MANAGER — DATE 4/27/15

MAYOR
MARLIN KUYKENDALL

CITY COUNCIL
JIM LAMERSON
STEVE BLAIR
JEAN WILCOX
CHARLIE ARNOLD
CHRIS KUKNYO
GREG LAZZELL

UTILITY INFORMATION

COMPANY	CONTACT	TELEPHONE
ARIZONA PUBLIC SERVICE CO. 6672 CORSAIR PRESCOTT, ARIZONA 86301	MIKE SHAW	(928)443-6617
CENTURYLINK 1445 MASONRY WAY PRESCOTT, ARIZONA 86301	KAREN PRUTZMAN	(928)776-2513
UNISOURCE GAS CO. 6405 WILKINSON DRIVE PRESCOTT, ARIZONA 86301	JEFF BROWN	(928)771-7227
CABLE ONE 3801 TOWER ROAD PRESCOTT, ARIZONA 86301	JOHNNY CEDILLO	(928)443-3348
CIT OF PRESCOTT WATER AND SEWER P.O. BOX 2059 PRESCOTT, ARIZONA 86301	JOEL BERMAN	(928)777-1130
BLUE STAKE CALL TWO WORKING DAYS BEFORE YOU DIG 1-800-STAKE-IT outside Maricopa County	CALL TWO WORKING DAYS BEFORE YOU DIG 1-800-STAKE-IT 1-800-782-5348 (OUTSIDE MARICOPA COUNTY)	

NOTE: CONTRACTOR TO VERIFY LOCATION AND ELEVATION OF EXISTING UTILITIES PRIOR TO CONSTRUCTION. CONTRACTOR IS RESPONSIBLE FOR COORDINATING ANY NECESSARY UTILITY RELOCATION WITH THE APPLICABLE UTILITY.

PROJECT BENCH MARK:
DATUM: NAVD-88
CITY OF PRESCOTT GRID COORDINATE SYSTEM

SPECIAL NOTE:
THE CITY OF PRESCOTT STANDARD DETAILS AND SPECIFICATIONS MEET MINIMUM DESIGN REQUIREMENTS OF THE EQUIVALENT MAG SPECIFICATIONS AND STANDARD DETAILS.

APPROVED TRAFFIC CONTROL PLAN AND R.O.W. PERMIT MUST BE OBTAINED FROM PUBLIC WORKS PRIOR TO BEGINNING WORK IN THE R.O.W.

CITY OF PRESCOTT PUBLIC WORKS IS RESPONSIBLE FOR INSPECTION OF IMPROVEMENTS IN THE R.O.W. AND DESIGNATED PUBLIC UTILITY EASEMENTS ONLY. ALL OTHER IMPROVEMENTS (ON-SITE) SHALL BE INDEPENDENTLY INSPECTED.

BASIS OF BEARING

SURVEY CONTROL IS THE CITY OF PRESCOTT SURVEY DATUM, ALSO BEING ARIZONA STATE PLANE ZONE, ARIZONA CENTRAL 0202, NAD 83, NAVD 88 USING GEOID MODEL GEOID99 (CONUS), CITY OF PRESCOTT - CONVERSION FROM STATE PLANE:

NORTHING; (STATE PLANE X 1.000329975) - 701,456.0090

EASTING; (STATE PLANE X 1.000329975) + 69,457.2499

STATE PLANE CONVERSION FROM CITY OF PRESCOTT NORTHING: (CITY OF PRESCOTT + 701,456.0090) X 0.999670134, EASTING: (CITY OF PRESCOTT - 69,457.2499) X 0.999670134

CITY OF PRESCOTT
Everybody's Hometown

ESTIMATED QUANTITIES			
ITEM NO.	DESCRIPTION	EST. QTY.	UNITS
1	RENO MATTRESS REMOVAL	15	CY
2	RENO MATTRESS	70	CY
3	PAVEMENT MATCHING AND SURFACE REPLACEMENT	480	SF
4	4 X 4 FOOT ALUMINUM GRATE WITH FALL PROTECTION	1	EA
5	SEEDING (HYDRAULIC)	20,000	SF
6	FIBER STRAW ROLL/STAKES	2,000	LF
7	ROCK REMOVAL (TRENCHING)	650	CY
8	48-INCH ULTRA FLOW STORM DRAIN CONSTRUCTION	420	LF
9	STORM DRAIN MANHOLE	1	EA

Call at least two full working days before you begin excavation.
ARIZONA 811
Arizona Blue Stake, Inc.
Dial 8-1-1 or 1-800-STAKE-IT (782-5348)
In Maricopa County: (602) 263-1100

CITY OF PRESCOTT PUBLIC WORKS

DWG. NO. PW01
DATE 4/17/15
SHEET NO. 1 OF 7

COVER SHEET AND INDEX

CITY OF PRESCOTT *Everybody's Hometown*

PREPARED BY DJC | CHECKED BY CA | FOR: COP

NO.	BY	DATE	REVISIONS	APPRV	DATE
				CITY	

ENGINEER

REVIEW:

CIP #: 15-001

FILE NAME&PATH: H:\ENGINEERING\DESIGN\LAKEVIEW PLAZA\01 COVER.DWG

GENERAL NOTES:

1. ALL CONSTRUCTION TO CONFORM TO CENTRAL YAVAPAI COUNTY GOVERNMENTS UNIFIED CONSTRUCTION STANDARDS AND SPECIFICATIONS (YAG STANDARDS), LATEST REVISIONS, UNLESS MODIFIED ON THE PLANS, IN CONJUNCTION WITH THE LATEST REVISIONS OF THE MARICOPA ASSOCIATION OF GOVERNMENTS STANDARD SPECIFICATIONS AND DETAILS UNLESS SPECIFICALLY MODIFIED ON THE PLANS.
2. A CITY OF PRESCOTT ENGINEERING DEPARTMENT PERMIT WILL BE REQUIRED FOR ALL OFFSITE CONSTRUCTION AND CONSTRUCTION WITHIN PUBLIC EASEMENTS.
3. IT IS THE SOLE RESPONSIBILITY OF THE CONTRACTOR TO OBTAIN, AT HIS OWN EXPENSE, SUCH PERMITS AS ARE REQUIRED FROM THE APPROPRIATE AGENCIES.
4. APPROVAL BY THE CITY ENGINEER MEANS FOR GENERAL LAYOUT IN THE RIGHT-OF-WAY ONLY.
5. THE ENGINEERING DEPARTMENT SHALL BE NOTIFIED A MINIMUM OF 24 HOURS PRIOR TO BEGINNING ANY CONSTRUCTION. (777-1130)
6. ANY WORK PERFORMED WITHOUT THE KNOWLEDGE AND APPROVAL OF THE CITY ENGINEER AND/OR ALL WORK MATERIALS NOT IN CONFORMATION WITH THE PLANS AND SPECIFICATIONS IS SUBJECT TO REMOVAL AND REPLACEMENT AT THE CONTRACTOR'S EXPENSE.
7. ALL CURBS, PAVEMENT, AND SIDEWALKS SHALL BE SWEPT CLEAN OF ALL DIRT AND DEBRIS PRIOR TO FINAL WALK THROUGH INSPECTION. WATER FLOW TEST MAY BE REQUESTED TO CHECK FOR PROPER DRAINAGE, AND/OR PONDING OF WATER.
8. THE CONTRACTOR SHALL PROVIDE ADEQUATE MEANS FOR CLEANING TRUCKS AND/OR OTHER EQUIPMENT OF MUD PRIOR TO ENTERING PUBLIC STREETS, IN ACCORDANCE WITH APPROVED SWPPP PLANS, AND IT IS THE CONTRACTOR'S RESPONSIBILITY TO CLEAN STREETS, ALLEYS, SIDEWALKS, AND TAKE WHATEVER MEASURES ARE NECESSARY TO INSURE THAT ALL ROADS ARE MAINTAINED IN A CLEAN, MUD AND DUST FREE CONDITION AT ALL TIMES.
9. A THOROUGH ATTEMPT HAS BEEN MADE TO SHOW THE LOCATION OF ALL UNDERGROUND OBSTRUCTION AND UTILITY LINES IN THE WORK AREA. THE CITY ENGINEER AND THE CITY OF PRESCOTT WILL NOT GUARANTEE ANY LOCATIONS OR ELEVATIONS OF EXISTING UNDERGROUND UTILITIES SHOWN ON THESE PLANS. THE CONTRACTOR SHALL BE RESPONSIBLE AND SHALL NOT BE RELIEVED OF RESPONSIBILITY FOR MAKING A COMPLETE AND ACCURATE ON-SITE DETERMINATION OF THE LOCATIONS OF ALL UTILITIES, STRUCTURES, AND FIELD CONDITIONS WHICH MAY AFFECT THE PROGRESS OF THE WORK. THE CONTRACTOR SHALL BE RESPONSIBLE FOR ANY DAMAGE TO STRUCTURES AND UTILITIES ENCOUNTERED DURING CONSTRUCTION AND SHALL FIELD EXPOSE EXISTING UNDERGROUND UTILITIES PRIOR TO TRENCHING IN THEIR VICINITY.
10. ALL FRAMES, COVERS, VALVE BOXES, MANHOLES, ETC., SHALL BE ADJUSTED TO FINISHED ASPHALT GRADE AFTER PLACEMENT OF SURFACE COURSE BY THE CONTRACTOR AS PER YAG STANDARD DETAILS (REFERENCE COP STANDARD).
11. THE CONTRACTOR SHALL BE RESPONSIBLE FOR COORDINATING THE RELOCATION OF ALL UTILITIES, POWER POLES, ETC., THAT MAY BE NECESSARY. THE CITY SHALL NOT BE RESPONSIBLE FOR DELAYS IN PROJECT FOR RELOCATION OF UTILITIES.
12. BASE COURSE WILL NOT BE PLACED ON SUBGRADE UNTIL SUBGRADE REQUIREMENTS HAVE BEEN COMPLETED AND ACCEPTED BY THE CITY ENGINEER.
13. NO PAVING CONSTRUCTION SHALL BE STARTED UNTIL ALL UNDERGROUND UTILITIES WITHIN THE ROADWAY PRISM ARE COMPLETED, INSPECTED AND APPROVED.
14. THE CONTRACTOR IS REQUIRED TO CONTACT BLUE STAKE (1-800-STAKE IT) TWO WORKING DAYS (48 HOURS) PRIOR TO COMMENCEMENT OF CONSTRUCTION. THE APPROPRIATE UTILITY COMPANIES SHALL BE NOTIFIED BY THE CONTRACTOR PRIOR TO ANY CONSTRUCTION.
15. ALL OBSTRUCTIONS IN THE RIGHT-OF-WAY OR PUBLIC UTILITY EASEMENT SHALL ISOLATED AND PROTECTED IN PLACE BEFORE ANY CONSTRUCTION IS PERMITTED.
16. BACKFILL COMPACTION SHALL BE TYPE 1 (MAG SECTION 601) UNLESS OTHERWISE NOTED (REFERENCE COP STANDARD).
17. ALL ASPHALT SHALL BE C 3/4" AS PER APPLICABLE MAG SPECIFICATIONS AND AS AMENDED BY THE CITY OF PRESCOTT (REFERENCE COP STANDARD).
18. PAVEMENT SHALL INCLUDE A CHIP SEAL COAT AS PER MAG SPECIFICATIONS 315 AND 330. CHIP SEAL SHALL BE MAG STANDARD 3/8" CHIPS.
19. ALL PLANS, SIGNED BY THE CITY ENGINEER IN CHARGE ARE NULL AND VOID ONE YEAR FROM DATE OF SIGNATURE IF CONSTRUCTION HAS NOT STARTED.
20. CONTRACTOR SHALL BE RESPONSIBLE FOR SUBMITTING TO THE CITY TRAFFIC ENGINEER FOR APPROVAL TRAFFIC CONTROL PLANS WHICH SHALL BE MADE A PART OF THE PLAN REVIEW REQUEST. THE CONTRACTOR SHALL DETERMINE THE EXACT SIGNING/TRAFFIC CONTROL DEVICES NECESSARY AND ALL TRAFFIC CONTROL WORK SHALL BE ACCORDANCE WITH THE LATEST REVISIONS THEREOF. NO STREET IS TO BE CLOSED, RESTRICTED, OR CONSTRUCTED UPON UNTIL A TRAFFIC PLAN IS PREPARED BY THE CONTRACTOR AND SUBMITTED TO THE CITY TRAFFIC ENGINEER 1 WEEK APPROVAL . APPROPRIATE EMERGENCY AGENCIES SHALL BE NOTIFIED 24 HOURS PRIOR TO ANY CLOSING OF STREETS.
21. ALL CMP CULVERTS SHALL BE 14 GAUGE MINIMUM.
22. CONTRACTOR/DEVELOPER SHALL WARRANT ALL WORK FOR A MINIMUM OF A TWO YEAR PERIOD.
23. IT SHALL BE THE CONTRACTOR'S RESPONSIBILITY TO OBTAIN COPIES OF MAG, YAG AND CITY OF PRESCOTT STANDARDS AND SPECIFICATIONS AS WELL AS ALL OTHER STANDARDS AND SPECIFICATIONS NECESSARY TO COMPLETELY AND ACCURATELY INTERPRET THESE PLANS.
24. THE CONTRACTOR SHALL GUARD AGAINST DAMAGE DURING CONSTRUCTION TO EXISTING PROPERTIES AND IMPROVEMENTS. ANY ITEMS DAMAGED BY CONSTRUCTION SHALL BE REPLACED IN KIND OR BETTER AT CONTRACTOR'S EXPENSE.
25. CONSTRUCTION STAKING SHALL BE BY THE CONTRACTOR WITH CONTROL PROVIDED BY THE DESIGN ENGINEER WHO STAMPED THE PLANS.
26. CONTRACTOR SHALL BE RESPONSIBLE FOR CONSTRUCTION SURVEYING AND LAYOUT. ANY QUESTIONS SHALL BE ADDRESSED TO THE DESIGN ENGINEER WHO STAMPED THE PLANS.
27. THE CITY OF PRESCOTT MAY ORDER ANY OR ALL WORKMANSHIP AND MATERIALS TO BE TESTED ACCORDING TO APPLICABLE STANDARDS.
28. THE CONTRACTOR WILL BE RESPONSIBLE FOR ALL REWORK AND/OR REMOVAL AND REPLACEMENT OF ALL MATERIALS AND/OR WORKMANSHIP REPRESENTED BY A FAILING TEST.
29. THE CONTRACTOR WILL BE RESPONSIBLE FOR ALL COSTS OF TESTING AND INSPECTION REQUIRED AT NIGHT AND ON WEEKENDS.
30. APPROVAL OF A PORTION OF THE WORK IN PROGRESS DOES NOT GUARANTEE ITS FINAL ACCEPTANCE. TESTING AND EVALUATION MAY CONTINUE UNTIL WRITTEN FINAL ACCEPTANCE OF A COMPLETE AND WORKABLE UNIT.
31. THE CITY OF PRESCOTT MAY SUSPEND THE WORK BY WRITTEN NOTICE WHEN, IN ITS JUDGEMENT, PROGRESS IS UNSATISFACTORY, WORK BEING DONE IS UNAUTHORIZED OR DEFECTIVE, WEATHER CONDITIONS ARE UNSUITABLE OR THERE IS A DANGER TO THE PUBLIC HEALTH OR SAFETY.
32. STREET AND TRAFFIC SIGNS WILL BE RELOCATED BY THE CONTRACTOR IF NECESSARY AT THE DIRECTION OF THE CITY OF PRESCOTT.
33. DRIVEWAY ENTRANCES WILL BE LOCATED IN THE FIELD BY THE ENGINEER UNLESS SPECIFIED ON THE PLANS. ALL DRIVEWAYS SHALL BE CONSTRUCTED WITH 6" THICK AGGREGATE BASE COURSE AS PER CITY OF PRESCOTT SPECIFICATION AND COMPACTED TO 95% STANDARD OR MODIFIED PROCTOR DENSITY UNLESS OTHERWISE NOTED.
34. ACCEPTANCE OF THE COMPLETED PAVING STRUCTURE WILL NOT BE GIVEN UNTIL REPRODUCIBLE 'AS-BUILT' PLANS HAVE BEEN SUBMITTED BY THE PROJECT ENGINEER OR CONTRACTOR, AND APPROVED BY THE CITY ENGINEER.
35. EDGES OF CONCRETE STRUCTURES TO HAVE A 3/4" CHAMFER.
36. CONCRETE SURFACES TO HAVE A BROOM FINISH UNLESS OTHERWISE NOTED ON THE PLANS AS PER CITY OF PRESCOTT STANDARDS.
37. ALL CONCRETE TO BE 3000 P.S.I., CLASS 'A' PORTLAND CEMENT CONCRETE UNLESS OTHERWISE SPECIFIED ON PLANS.
38. ALL EXPANSION JOINTS TO BE SEALED WITH 1/2" EXPANSION JOINT, PREFORMED JOINT FILLER AND SEALER IN ACCORDANCE WITH MAG SPECIFICATION 729.
39. ALL PCC CONCRETE THAT WILL ABUT ASPHALT PAVING SHALL BE PLACED AND ALLOWED TO CURE UNTIL DESIGN STRENGTH IS MET, OR A MINIMUM OF 72 HOURS PRIOR TO PAVING OF ROADS.

GRADING PLAN GENERAL NOTES:

1. ALL GRADING SHALL CONFORM TO THE CURRENT CITY ADOPTED EDITION OF THE INTERNATIONAL BUILDING CODE, AND CITY OF PRESCOTT LAND DEVELOPMENT CODE (REFERENCE CITY OF PRESCOTT STANDARD SECTIONS).
2. ALL PROVISIONS OF THE PRELIMINARY SOILS REPORT PREPARED BY _____, DATED _____ SHALL BE COMPLIED WITH DURING OPERATIONS.
3. THIS PLAN IS FOR GRADING PURPOSES ONLY. APPROVAL OF THIS PLAN DOES NOT CONSTITUTE APPROVAL OF DRIVEWAY LOCATIONS OR SIZES, PARKING LOT LAYOUT, SEWER AND WATER FACILITIES, BUILDING LOCATIONS, OFF-SITE DRAINAGE FACILITIES OR OTHER ITEMS NOT RELATED DIRECTLY TO THE BASIC GRADING OPERATION.
4. CERTIFICATION FROM THE REGISTERED CIVIL ENGINEER AND SOILS/GEOLOGICAL ENGINEER STATING THAT THE ROUGH GRADING HAS BEEN COMPLETED PER THE APPROVED PLAN, AND A COMPACTION REPORT FROM THE SOILS ENGINEER ON ANY FILL AREAS THAT ARE REQUIRED SHALL BE PROVIDED PRIOR TO BUILDING PERMITS BEING ISSUED.
5. PARTIES NAMED ON ADEQ'S NOTICE OF INTENT (N.O.I.) ARE RESPONSIBLE FOR EROSION, DUST, MUD, SILT, DEBRIS, AND TEMPORARY DRAINAGE CONTROL DURING GRADING OPERATIONS AND MAY BE REQUIRED TO PROVIDE A SWPPP.
6. ANY ON-SITE RETAINING WALLS WILL REQUIRE APPROVAL AS PART OF THESE PLANS. ANY NECESSARY RETAINING WALLS ON THE PERIMETER OF THIS SITE MAY BE REQUIRED TO BE IN PLACE AND APPROVED BY THE CITY BUILDING DEPARTMENT PRIOR TO THE START OF GRADING. A SEPARATE PLAN WITH REQUIRED STRUCTURAL CALCULATIONS MAY BE REQUESTED FOR RETAINING WALLS.
7. ANY INFRASTRUCTURE CONSTRUCTED IN THE PUBLIC RIGHT OF WAY WILL REQUIRE SEPARATE PLAN APPROVAL AND INSPECTION FROM THE CITY ENGINEER.
8. ANY WALLS, FENCES, STRUCTURES AND/OR APPURTENANCES ADJACENT TO THIS PROJECT SHALL BE PROTECTED IN PLACE. IF GRADING OPERATIONS DAMAGE OR ADVERSELY AFFECT SAID ITEMS IN ANY WAY, THE CONTRACTOR AND/OR DEVELOPER IS RESPONSIBLE FOR WORKING OUT AN ACCEPTABLE SOLUTION TO THE SATISFACTION OF THE AFFECTED PROPERTY OWNER(S).
9. THE CONTRACTOR/DEVELOPER IS RESPONSIBLE FOR ENSURING THAT RETAINING WALLS DO NOT INTERFERE WITH PROVISION OF UTILITIES. WALLS MUST BE CONSTRUCTED ON SITE AND OUTSIDE OF THE RIGHT OF WAY. THIS SHALL INCLUDE THE FOOTINGS.
10. IT IS THE CONTRACTOR'S RESPONSIBILITY TO ENSURE THAT COMPACTION HAS BEEN ATTAINED ON THE ENTIRE GRADING SITE IN ACCORDANCE WITH THE GENERAL ENGINEERING PLAN, INCLUDING FILL AREAS OUTSIDE THE BUILDING PADS AND ON ALL FILL SLOPES, AND SHALL BE CERTIFIED BY THE SOIL'S ENGINEER.
11. CITY APPROVAL OF PLANS DOES NOT RELIEVE THE DEVELOPER FROM THE RESPONSIBILITY FOR CORRECTION OR ERROR OR OMISSION DISCOVERED DURING CONSTRUCTION. UPON REQUEST, THE REQUIRED PLAN REVISIONS SHALL BE PROMPTLY SUBMITTED TO THE CITY ENGINEER FOR APPROVAL.
12. IT SHALL BE THE CONTRACTOR'S RESPONSIBILITY TO CALL THE CITY ENGINEER'S OFFICE AT (928) 777-1140 FOR ANY REQUIRED CIVIL INSPECTION 24 HOURS PRIOR TO PERFORMING ANY WORK. WORK PERFORMED WITHOUT CALLING FOR INSPECTION MAY BE REJECTED AND, IF REJECTED, SHALL BE REMOVED SOLELY AT THE CONTRACTOR'S EXPENSE.
13. NO GRADING SHALL COMMENCE WITHOUT OBTAINING A GRADING PERMIT AND NOTIFYING THE CITY OF PRESCOTT OR DEVELOPER'S GRADING INSPECTOR TO SCHEDULE A PREGRADING MEETING TWO WORKING DAYS PRIOR TO THE START OF WORK.
14. PRIOR TO THE START OF GRADING ALL SWPPP MEASURES SHALL BE IN PLACE, ALL DEBRIS, INCLUDING EXISTING STRUCTURES, FOOTINGS, FOUNDATIONS AND RUBBLE SHALL BE REMOVED FROM THE SITE TO THE SATISFACTION OF THE SOILS ENGINEER.
15. AFTER REMOVAL OF DEBRIS, ANY EXISTING FILL OR DISTURBED NATURAL SOILS SHALL BE EXCAVATED TO THE SATISFACTION OF THE SOILS ENGINEER.
16. THE EXPOSED SOILS SHALL THEN BE INSPECTED BY THE SOILS ENGINEER, AND ANY ADDITIONAL OVER-EXCAVATION SHALL THEN BE MADE IN ACCORDANCE WITH THE SOILS ENGINEER'S RECOMMENDATIONS AND AS CONTAINED IN THE SOIL'S REPORT.
17. THE EXPOSED SOILS SHALL THEN BE SCARIFIED TO PROVIDE A BOND WITH NEW FILL, BROUGHT TO PROPER MOISTURE CONTENT AND COMPACTED TO AT LEAST 90% OF THE MAXIMUM DENSITY, AS DETERMINED BY ASTM D1557-78 OR EQUIVALENT COMPACTION SHALL BE OBTAINED BY METHODS SPECIFIED BY THE SOILS ENGINEER. ROAD PRISM SUBGRADE SHALL BE COMPACTED TO AT LEAST 95% STANDARD OR MODIFIED PER SOILS ENGINEER'S RECOMMENDATIONS.
18. THE SOILS AND DESIGN ENGINEER OF RECORD SHALL ALSO BE RESPONSIBLE TO INSPECT, VERIFY AND REPORT THAT PROPER COMPACTION HAS BEEN OBTAINED BY EARTHWORK CONTRACTOR OR SUBCONTRACTOR AND PRIVATE UTILITY FRANCHISES CONCERNING UTILITY LINE BACKFILL, TO INCLUDE ELECTRICAL, GAS, CABLE, FIBEROPTIC AND LANDSCAPE IRRIGATION LINES. ADDITIONALLY, WATER AND SEWER LINES TO BE BACKFILLED AND COMPACTED IN ACCORDANCE WITH GENERAL ENGINEERING REQUIREMENTS SECTION AND DETAIL.
19. AN AS-GRADED GRADING PLAN AND THE CERTIFICATION OF COMPLIANCE FORMS FOR SAID GRADING PLAN WITH THE PROPER STAMPS AND SIGNATURES ARE TO BE SUBMITTED TO THE CITY ENGINEER PRIOR TO RELEASE OF GRADING BOND AND PRIOR TO FINAL GRADING INSPECTION. BUILDING PAD CERTIFICATION SHALL BE SUBMITTED TO THE BUILDING DEPARTMENT WHEN REQUESTED.
20. NO FILL SHALL BE PLACED UNTIL STRIPPING OF VEGETATION, REMOVAL OF UNSUITABLE SOILS, AND INSTALLATION OF SUBDRAINS (IF ANY) HAVE BEEN INSPECTED AND APPROVED BY THE SOILS ENGINEER.
21. ENGINEER MUST SET GRADE STAKES FOR ALL DRAINAGE DEVICES AND OBTAIN INSPECTION BEFORE POURING.
22. GRADING SHALL NOT BE STARTED WITHOUT FIRST NOTIFYING CITY PUBLIC WORKS INSPECTION DEPARTMENT. A PRE-GRADING MEETING ON THE SITE IS REQUIRED BEFORE BEGINNING GRADING ACTIVITIES BY THE FOLLOWING PEOPLE PRESENT: OWNER, GRADING CONTRACTOR, DESIGN CIVIL ENGINEER, SOIL ENGINEER/GEOLOGIST, PUBLIC WORKS INSPECTOR, AND WHEN REQUIRED, THE ARCHAEOLOGIST AND PALEONTOLOGIST. THE REQUIRED INSPECTIONS FOR GRADING WILL BE EXPLAINED AT THE PRE-CONSTRUCTION MEETING.
23. ALL EXISTING FILLS SHALL BE APPROVED AND CERTIFIED BY THE SOILS ENGINEER OR REMOVED PRIOR TO PLACING ADDITIONAL FILLS.
24. ALL TRENCH BACKFILLS SHALL BE TESTED AND APPROVED BY THE SOIL ENGINEER.
25. THE COMPACTION REPORT AND APPROVAL FROM THE SOIL ENGINEER SHALL INDICATE THE TYPE OF FIELD TESTING PERFORMED. EACH TEST SHALL BE IDENTIFIED WITH THE METHOD OF OBTAINING THE IN-PLACE DENSITY, WHETHER SAND CONE OR NUCLEAR GAUGE, AND SHALL BE SO NOTED FOR EACH TEST.
26. EXPORT SOIL MUST BE TRANSPORTED TO A LEGAL DUMP OR TO A PERMITTED SITE SHOWN CLEARLY ON APPROVED PLANS.
27. ALL EXISTING DRAINAGE COURSES THROUGH THIS SITE SHALL REMAIN OPEN UNTIL FACILITIES TO HANDLE STORM WATER ARE APPROVED AND FUNCTIONAL; HOWEVER, IN ANY CASE, THE PERMITTEE SHALL BE HELD LIABLE FOR ANY DAMAGE DUE TO OBSTRUCTING NATURAL DRAINAGE PATTERNS.

C. Winthrop Andrews, Jr.

Registered Professional Engineer (Civil)
CERTIFICATE NO. 39473
C. WINTHROP ANDREWS, SR.
Date Signed 4/17/15
ARIZONA U.S.A.

EXPIRES 9-30-15

NO.	BY	DATE	REVISIONS	APPRV	DATE
				CITY	

ENGINEER

REVIEW:

CIP #: 10-024

CITY OF PRESCOTT
Everybody's Hometown

PREPARED BY: DJC | CHECKED BY: CA | FOR: COP

CITY OF PRESCOTT PUBLIC WORKS

GENERAL NOTES

DWG. NO. PW02

DATE 4/17/15

SHEET NO. 2 OF 7

LAKEVIEW PLAZA STORM EXTENSION

FILE NAME&PATH: H:\ENGINEERING\DESIGN\LAKEVIEW PLAZA\02. NOTES.DWG

LEGEND

PARCEL LINETYPES

LINETYPE EXISTING	LINETYPE PROPOSED	DESCRIPTION
		SUBDIVISION BOUNDARY
		RIGHT OF WAY
		PARCEL
		SETBACKS
		EASEMENTS
		CENTERLINES

FEATURE LINETYPES

LINETYPE EXISTING	LINETYPE PROPOSED	DESCRIPTION
		6" SINGLE CURB
		6" VERTICAL CURB & GUTTER
		EDGE OF PAVEMENT
		CONCRETE
		GRAVEL
		SIDEWALK
		SHOULDER
		SAWCUT
		GUARDRAIL
		FENCE, BARBED
		FENCE, CHAINLINK
		FENCE, WOOD
		FLOWLINE
F F	F F	FILL CATCH LINE
C C	C C	CUT CATCH LINE
		RAILROAD TRACKS
		WATER EDGE
		TREE LINE
		BRUSH LINE
5555	5555	MAJOR CONTOUR
5554	5554	MINOR CONTOUR
		BUILDING
		BUILDING OVERHANG
		STORM DRAIN PIPE or CULVERT

UTILITY LINETYPES

LINETYPE EXISTING	LINETYPE PROPOSED	DESCRIPTION
W	W	WATER LINE, SIZE NOT INDICATED
4W	4W	WATER LINE, 4" DIA
6W	6W	WATER LINE, 6" DIA
8W	8W	WATER LINE, 8" DIA
10W	10W	WATER LINE, 10" DIA
12W	12W	WATER LINE, 12" DIA
18W	18W	WATER LINE, 18" DIA
24W	24W	WATER LINE, 24" DIA
IRR	IRR	IRRIGATION LINE
S	S	SEWER LINE, SIZE NOT INDICATED
4S	4S	SEWER LINE, 4" DIA.
6S	6S	SEWER LINE, 6" DIA.
8S	8S	SEWER LINE, 8" DIA.
10S	10S	SEWER LINE, 10" DIA.
12S	12S	SEWER LINE, 12" DIA.
18S	18S	SEWER LINE, 18" DIA.
24S	24S	SEWER LINE, 24" DIA.
OH	OH	OVERHEAD UTILITY LINE
E	E	ELECTRIC LINE, UNDERGROUND
CTV	CTV	CABLE TELEVISION LINE, UNDERGROUND
TEL	TEL	TELEPHONE LINE, UNDERGROUND
ECT	ECT	ELECTRIC, CABLE, TELEPHONE COMMON TRENCH, UNDERGROUND
GAS	GAS	GAS LINE, UNDERGROUND
FO	FO	FIBER OPTIC LINE, UNDERGROUND

SIGNALIZATION LINETYPES

LINETYPE EXISTING	LINETYPE PROPOSED	DESCRIPTION
INT	INT	INTERCONNECT CONDUIT
FO	FO	FIBER OPTIC CONDUIT
TS	TS	TRAFFIC SIGNAL CONDUIT
TSFO	TSFO	TRAFFIC SIGNAL CONDUIT

WATER SYMBOLS AND LINETYPES

SYMBOL EXISTING	SYMBOL PROPOSED	DESCRIPTION
		FIRE HYDRANT
W	W	WATER METER
		BLOW-OFF
		WATER VALVE
		THRUST BLOCK
		CROSS
		TEE
		REDUCER
		CAP / PLUG

DRAINAGE SYMBOLS

SYMBOL EXIST.	SYMBOL PROP.	DESCRIPTION
ST	ST	STORM DRAIN MANHOLE
		GRATED CATCH BASIN
		CURB OPENING INLET
		COMBINATION INLET
		RIP RAP

SURVEY SYMBOLS

SYMBOL	DESCRIPTION
	SECTION CORNER MONUMENT
	SECTION QUARTER CORNER MONUMENT
	BRASS CAP
	CAPPED REBAR
	TAGGED REBAR
	SCRIBED "X"
	PK NAIL
	CALCULATED POINT
	SITE BENCHMARK
	SET MONUMENT
	AERIAL PANEL
	OWNERSHIP TIE

SEWER SYMBOLS

SYMBOL EXISTING	SYMBOL PROPOSED	DESCRIPTION
S	S	SANITARY SEWER MANHOLE
Co	Co	SANITARY SEWER CLEAN OUT
CO	CO	2-WAY BUILDING CLEAN OUT

DRY UTILITY SYMBOLS

SYMBOL EXIST.	SYMBOL PROP.	DESCRIPTION
		UTILITY POLE
E	E	ELECTRICAL TRANSFORMER, SWITCHING CABINET, PULL BOX, OR VAULT
		ELECTRICAL SERVICE METER
		DOWN GUY (ANCHOR)
		CABLE TV PEDESTAL
		TELEPHONE PEDESTAL
T	T	TELEPHONE VAULT
T	T	TELEPHONE MANHOLE
		GAS METER
		GAS VALVE

SURFACE/LANDSCAPING SYMBOLS

SYMBOL	SYMBOL	DESCRIPTION
		SIGN
		POST
		BOLLARD
		MAIL BOX
BUS	BUS	BUS STOP
		BORE LOCATION
		CONIFER TREE
		DECIDUOUS TREE
		DECIDUOUS SHRUB
		EVERGREEN SHRUB
		RAILROAD CROSSING MAST ARM
		STREET LIGHT
		YARD LIGHT

SIGNALIZATION SYMBOLS (ABOVE GROUND PLANS)

SYMBOL EXIST.	SYMBOL PROP.	DESCRIPTION
		SIGNAL MAST ARM
		SAFETY LIGHT
		VIDEO CAMERA
		EV INDICATOR LIGHTS
		EV OPTICOM SENSOR
		PED. PUSHBUTTON (1)
		TENON
		PEDESTRIAN SIGNAL HEAD
		TRAFFIC SIGNAL POLE
		VEHICLE SIGNAL HEAD
		VEHICLE SIGNAL HEAD W/ARROW INDICATOR
PV	PV	VEHICLE SIGNAL HEAD W/PROGRAMMED VISIBILITY
PV	PV	VEHICLE SIGNAL HEAD W/ARROW INDICATOR AND PROGRAMMED VISIBILITY
		OVERHEAD SIGN ASSEMBLY
		TRAFFIC CONTROL SIGN
		SIGNAL CONTROLLER CABINET
		JUNCTION BOX (TYPE IB)
		JUNCTION BOX (TYPE II)
M	M	JUNCTION BOX (TYPE II-M)
		JUNCTION BOX (TYPE 3)
		INTERCONNECT PEDESTAL
C	C	SERVICE CABINET
FO	FO	FIBEROPTIC TERMINATION CABINET
SB	SB	SPLICE BOX

SIGNALIZATION SYMBOLS (UNDERGROUND PLANS)

SYMBOL EXIST.	SYMBOL PROP.	DESCRIPTION
		DIAMOND DETECTOR 6X8
		QUADRAPOLE DETECTOR 20'
		QUADRAPOLE DETECTOR 50'
		SQUARE DETECTOR 6X6
		CIRCLE DETECTOR 6'
		RADAR DETECTOR (RTMS) UNIT
		TRAFFIC SIGNAL POLE
		TRAFFIC SIGNAL POLE
		SIGNAL CONTROLLER CABINET
		JUNCTION BOX (TYPE IB)
		JUNCTION BOX (TYPE II)
M	M	JUNCTION BOX (TYPE II-M)
		JUNCTION BOX (TYPE 3)
		INTERCONNECT PEDESTAL
C	C	SERVICE CABINET
FO	FO	FIBEROPTIC TERMINATION CABINET
SB	SB	SPLICE BOX

HATCH PATTERNS

EXISTING	PROPOSED	DESCRIPTION
		GRASS
		RIP RAP
		CONCRETE
		ASPHALT
		BUILDINGS
		TRUNCATED DOMES (DETECTABLE WARNING)

PROFILE LINETYPES

DESCRIPTION
MAJOR GRID
MINOR GRID
EXISTING GRADE
PROPOSED GRADE
EXISTING WATER, SANITARY SEWER, OR STORM SEWER
PROPOSED WATER, SANITARY SEWER, OR STORM SEWER
EXISTING DRY UTILITIES (CROSSINGS ONLY)
PROPOSED DRY UTILITIES (CROSSINGS ONLY)

PROFILE SYMBOLS

SYMBOL EXIST./PROP.	DESCRIPTION
	MANHOLE PROFILE VIEW
	CATCH BASIN PROFILE VIEW
	CLEAN OUT PROFILE VIEW

NOTE BUBBLES

#	KEYNOTE SYMBOL
#	KEYNOTE SYMBOL
#	KEYNOTE SYMBOL
#	KEYNOTE SYMBOL
#	KEYNOTE SYMBOL
#	KEYNOTE SYMBOL
#	KEYNOTE SYMBOL

ABBREVIATIONS

&	AND
@	AT
℄, CL	CENTERLINE
⅊, PL	PROPERTY LINE
%	PERCENT
#	NUMBER
A.B.	AS BUILT
AC.	ACRE
A/C	ASPHALTIC CONCRETE
AGGR.	AGGREGATE
ALT.	ALTERNATE
AP	ANGLE POINT
APPROX.	APPROXIMATELY
ASPH.	ASPHALT
B&B	BALLED AND BURLAPPED
B.C.	BOTTOM OF CURB
BIT.	BITUMINOUS, BITUMEN
B.O.C.	BACK OF CURB
BOP	BEGINNING OF PROJECT
BOT.	BOTTOM
B.S.	BOTTOM OF SLOPE
C&G	CURB & GUTTER
CAL.	CALIPER
C.B.	CATCH BASIN
C.F.	CUBIC FEET
C.J.	CONTROL JOINT
CLR.	CLEAR
CMP	CORRUGATED METAL PIPE
CMU	CONCRETE MASONRY UNIT
CONC.	CONCRETE
CONST.	CONSTRUCTION
CONT.	CONTINUOUS
COORD.	COORDINATE
C.Y.	CUBIC YARDS
DET.	DETAIL
D.I.	DRAIN INLET
DIA.	DIAMETER
D.I.P.	DUCTILE IRON PIPE
DWG.	DRAWING
E	EAST
EA.	EACH
E.J.	EXPANSION JOINT
EL.	ELEVATION
EOP	END OF PROJECT
EP	EDGE OF PAVEMENT
EQ.	EQUAL
EX., EXIST.	EXISTING
EXP.	EXPOSED
FF.	FINISH FLOOR
F.G.	FINISHED GRADE
F.H.	FIRE HYDRANT
FIN.	FINISH
FO	FIBEROPTIC
FIPT	FEMALE IRON PIPE THREAD
F.O.C.	FACE OF CURB
FT.	FOOT OR FEET
FTG.	FOOTING
GA.	GAUGE
GAL.	GALLON
GALV.	GALVANIZED
H.B.	HOSE BIB
H/C, H.C.	HANDICAP
HDR.	HEADER
HORIZ.	HORIZONTAL
H.P.	HIGH POINT
HT.	HEIGHT
I.D.	INSIDE DIAMETER
I.E.	INVERT ELEVATION
IN.	INCHES
INT	INTERCONNECT
JT.	JOINT
L.A.	LANDSCAPE ARCHITECT
L.F.	LINEAR FEET
L.P.	LOW POINT, LIGHT POLE
LT.	LIGHT
LHT	LIGHTING
MAX.	MAXIMUM
MB	MAILBOX
MED.	MEDIUM
MEMB.	MEMBRANE
MET.	METAL
MFR.	MANUFACTURER
MH.	MANHOLE
MIN.	MINIMUM
MIPT	MALE IRON PIPE THREAD
MISC.	MISCELLANEOUS
N	NORTH
N.I.C.	NOT IN CONTRACT
NO.	NUMBER
N.T.S.	NOT TO SCALE
O.C.	ON CENTER
O.D.	OUTSIDE DIAMETER
OPP.	OPPOSITE
P	PARKING
P.A.	PLANTING AREA
PAT.	PATTERN
P.C.	POINT OF CURVATURE
PH	POT-HOLE
P.O.B.	POINT OF BEGINNING
P.O.C.	POINT OF CONNECTION
P.S.	PIPE SLEEVE
P.T.	POINT OF TANGENCY
PUD	POWER
P.V.C.	POLYVINYL CHLORIDE PIPE
R, RAD.	RADIUS
RIM	RIM ELEVATION
REINF.	REINFORCED, REINFORCING
REQD.	REQUIRED
R.O.W., R/W	RIGHT OF WAY
S	SOUTH
SS	SANITARY SEWER
S.F.	SQUARE FEET
SHT.	SHEET
SLV.	SLEEVE
SPA.	SPACES
SPECS.	SPECIFICATIONS
SQ.	SQUARE
STL.	STEEL
STM	STORM SEWER
T.C., TC	TOP OF CURB
T.J.	TOOLED JOINT
T.S.	TOP OF SLOPE
T.W.	TOP OF WALL
TEL	TELEPHONE
TV	CABLE TELEVISION
TS	TRAFFIC SIGNAL CONDUIT
TSFO	TRAFFIC SIGNAL CONDUIT FIBEROPTIC
VERT.	VERTICAL
W	WEST, WATER
W/	WITH
W/O	WITHOUT
WPF.	WATERPROOF
W.W.M.	WELDED WIRE MESH

Professional Engineer (Civil) CERTIFICATE NO. 39473 C. WINTHROP ANDREWS, SR. Date Signed 4/17/15 ARIZONA U.S.A.

Expires 9/30/15

CITY OF PRESCOTT PUBLIC WORKS

LEGEND AND ABBREVIATIONS

DWG. NO. PW03 | DATE 4/17/15 | SHEET NO. 3 OF 7

LAKEVIEW PLAZA STORM EXTENSION

CITY OF PRESCOTT *Everybody's Hometown*

PREPARED BY DJC | CHECKED BY CA | FOR: COP

NO.	BY	DATE	REVISIONS	APPRV	DATE
				CITY	

ENGINEER

REVIEW:

CIP #: 10-024

FILE NAME&PATH: N:\ENGINEERING\DESIGN\LAKEVIEW PLAZA\03 LEGEND.DWG

CONSTRUCTION NOTES:

1. ELECTRIC POLE GUY ANCHOR PROTECT-IN-PLACE. ANY DISTURBANCE TO GUY ANCHOR MUST BE COORDINATED WITH APS.
2. FOR PAVEMENT REPLACEMENT, SEE C.O.P. T-TOP DETAIL 2-01P-MOD. SEE DETAIL SHEET.
3. APPROX. 30' PREFABRICATED HORIZONTAL BEND IN STORM DRAIN, CONTRACTOR TO VERIFY ANGLE PRIOR TO FABRICATION.
4. STREET SIGN TO BE REMOVED AND REPLACED.
5. MAXIMUM 8-FOOT WIDE SHORING IS REQUIRED FOR THE ENTIRE STORM DRAIN INSTALLATION TO PROTECT EXISTING UTILITIES AND IMPROVEMENTS.
6. !!!CAUTION!!! OVERHEAD ELECTRIC.
7. STEEL GRATE TO BE REMOVED AND REPLACED WITH ALUMINUM HATCH DETAIL. SEE DETAIL SHEET 7.
8. EXISTING 2" WATER SERVICE METER BOX. PROTECT IN PLACE.
9. STORM MANHOLE PER MAG DETAIL 520 AND 522 WITH BOLT DOWN RING AND COVER.
10. INSTALL 48" ULTRA FLOW STORM SEWER WITH TRACE WIRE.
11. TRACE WIRE STATION PER C.O.P. 3-19AP DETAIL.
12. TIE TO EXISTING GABION/RENO MATTRESS.
13. RECOMMEND CONTRACTOR USE PLATE IN BOX TO BLOCK FLOW TO PREVENT STORMWATER ENTERING THE NEW LINE DURING CONSTRUCTION.

Pothole Table

No.	Existing Elevation	Elevation top of Utility	Northing	Easting	Description
1	7172.26	5170.06	608733.11	607541.78	2" Steel
2	7172.26	5169.93	608733.7	607541.9	½" Insulated Wire
3	7172.6	5163.95	608724.57	607540.95	4" DIP Gas
4	7172.55	5169.4	608720.2	607542.78	4" PVC – CLN Fiber
5	7172.57	5169.42	608719.1	607542.89	4" PVC – CLN Fiber
6	5172.36	5168.44	608700.53	607542.34	2" PVC - CLN
7	5172.36	5168.28	608700.53	607542.34	1.5" PVC - CLN
8	5171.49	5163.92	608800.644	607548.13	14" DIP Water Main
9	5171.91	5166.41	608733.812	607548.71	14" DIP Water Main

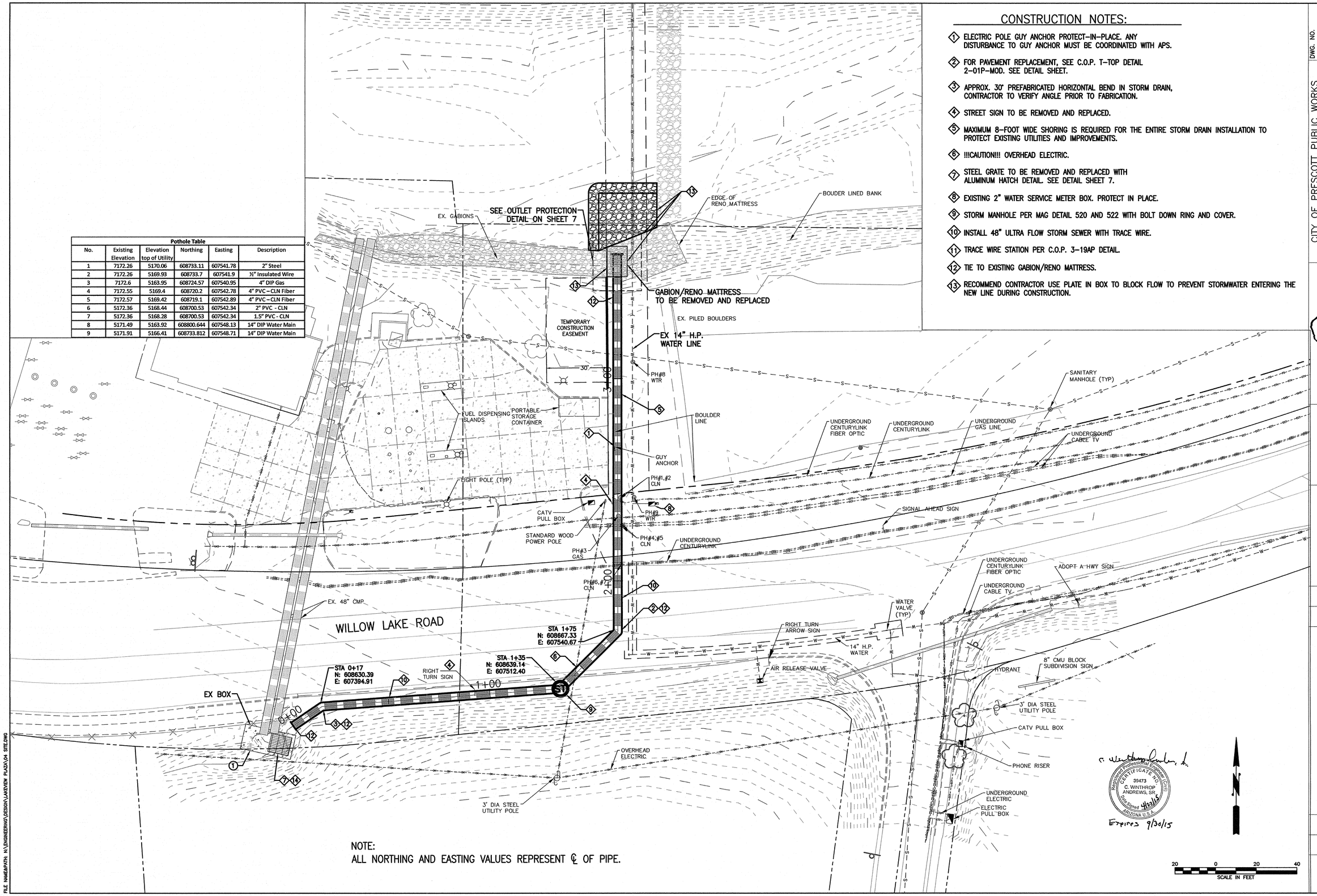

NOTE:
ALL NORTHING AND EASTING VALUES REPRESENT ℄ OF PIPE.

CITY OF PRESCOTT PUBLIC WORKS

GENERAL STORM DRAIN LAYOUT

DWG. NO. PW04 | DATE 4/17/15 | SHEET NO. 4 OF 7

LAKEVIEW PLAZA STORM EXTENSION

CITY OF PRESCOTT *Everybody's Hometown*

PREPARED BY DJC | CHECKED BY CA | FOR: COP

NO.	BY	DATE	REVISIONS	APPRV	DATE
				CITY	

ENGINEER | REVIEW:

CIP #: 10-024

FILE NAME&PATH: N:\ENGINEERING\DESIGN\LAKEVIEW PLAZA\04 SITE.DWG

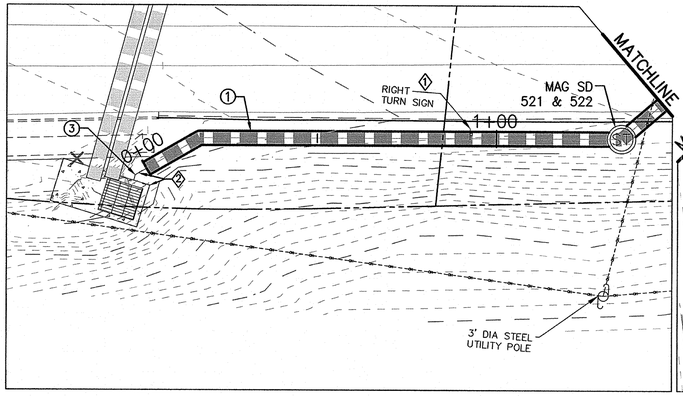

48" STORM
SCALE: 1" = 20'

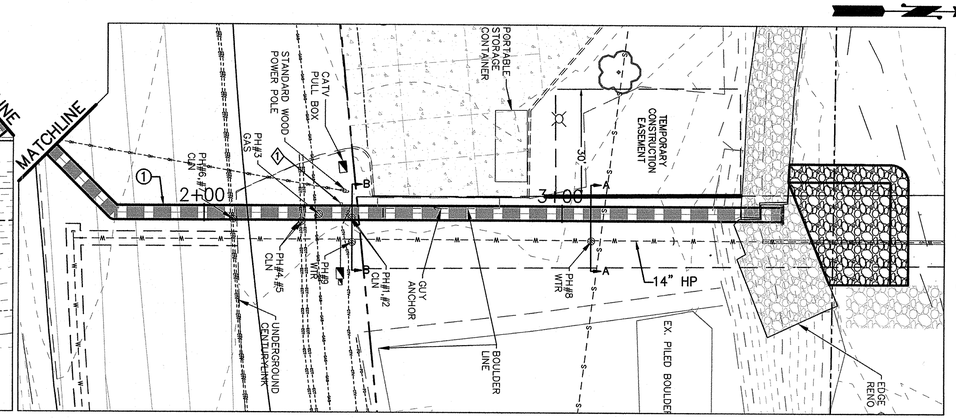

48" STORM
SCALE: 1" = 20'

20 0 20 40
SCALE IN FEET

GENERAL NOTES:

1. ALL STORM PIPES TO BE 48-INCH DIAMETER ULTRA FLOW ALUMINIZED STEEL TYPE 2 PIPE.
2. THE MINIMUM SEPARATION FOR THE GAS LINE IS 8-INCHES. IF THE SEPARATION IS LESS THAN 8-INCHES, UNISOURCE GAS MUST BE CONTACTED AT (928) 771-7229 TO INSTALL A 6-INCH SLEEVE OVER THE GAS MAIN EXTENDING 12-INCHES OF EACH SIDE OF THE STORM DRAIN.
3. CONTRACTOR TO VERIFY EXISTING PIPE SIZE, INVERT ELEVATION, AND MATERIAL PRIOR TO CONSTRUCTION.
4. PER THE PLANS AND POTHOLING LOCATIONS OF 6 AND 7, TWO CENTURY LINK PHONE LINES NEED TO BE RAISED ABOVE THE STORM DRAIN. THE CONTRACTOR WILL NEED TO COORDINATE THE WORK WITH KAREN PRUTZMAN AT CENTURY LINK AT (928) 776-2513.

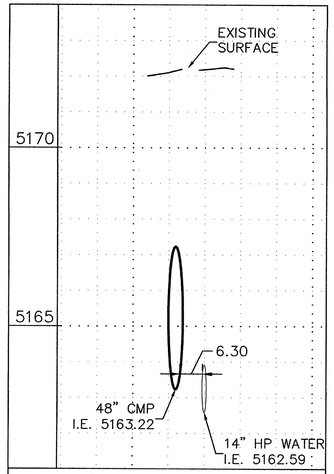

SECTION A-A
SCALE: 1" = 20' HORIZ.
1" = 4' VERT.

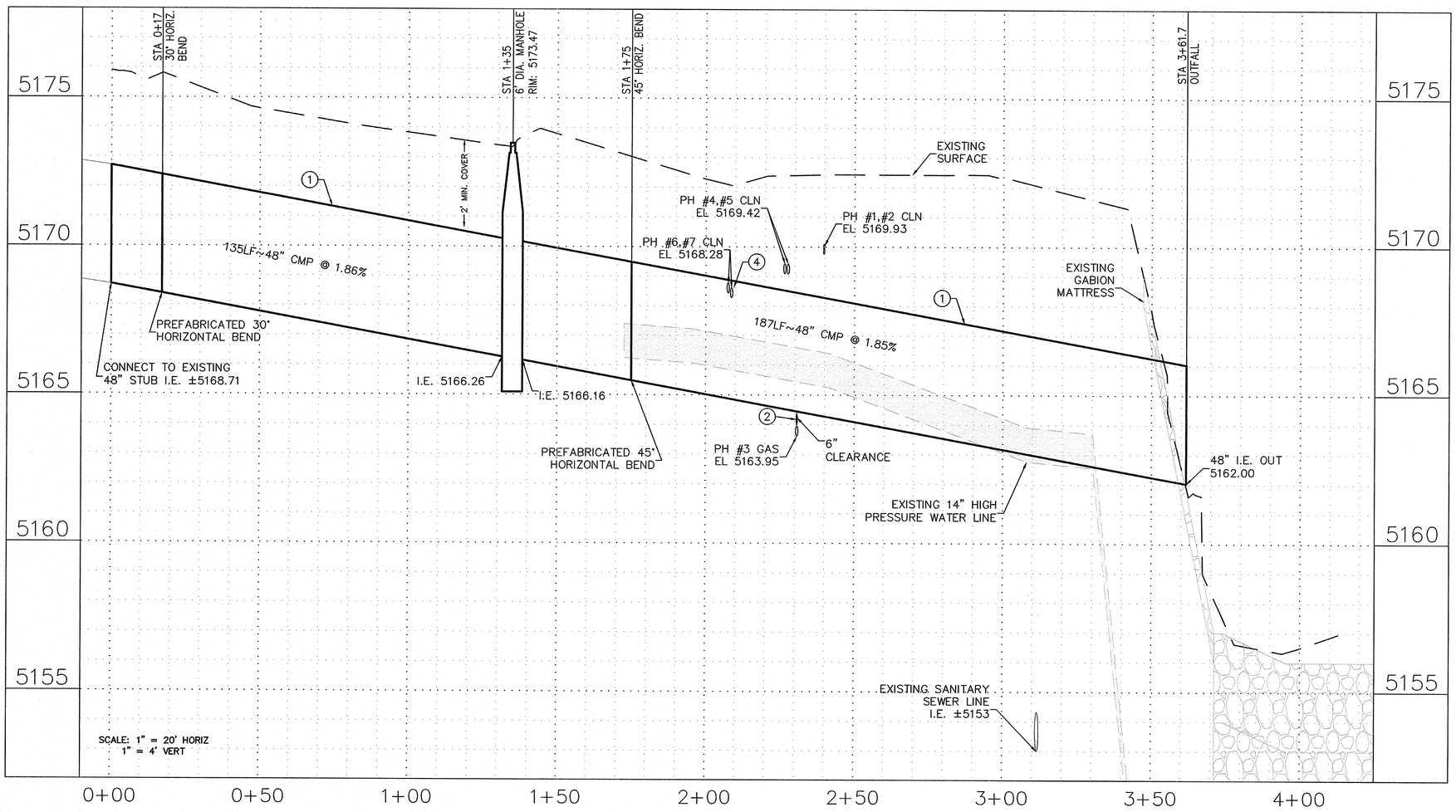

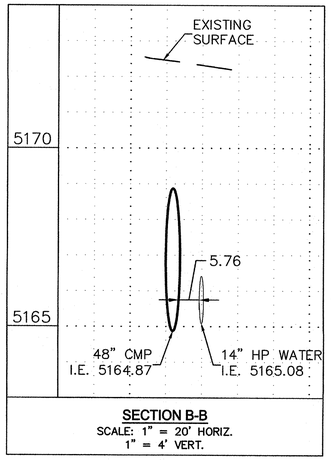

SECTION B-B
SCALE: 1" = 20' HORIZ.
1" = 4' VERT.

CONSTRUCTION NOTES:

1. EXISTING SIGN TO BE REMOVED AND RELOCATED.
2. EXISTING CONCRETE DRAINAGE STRUCTURE AND EXISTING 48" CMP STUB. REMOVE PLUG AND CONNECT TO EXISTING CMP WITH 24" HUGGER BAND AND NEOPRENE GASKET.

C. Winthrop Andrews, Jr.
Registered Professional Engineer (Civil)
CERTIFICATE NO. 39473
C. WINTHROP ANDREWS, SR.
Date Signed 4/17/15
ARIZONA U.S.A.
Expires 9/30/15

NO.	BY	DATE	REVISIONS	APPRV	DATE
				CITY	

ENGINEER
REVIEW:
CIP #: 10-024

CITY OF PRESCOTT PUBLIC WORKS

48" CMP PLAN AND PROFILE
STA 0+00 TO STA 3+82

CITY OF PRESCOTT
Everything's Hometown

PREPARED BY	CHECKED BY	FOR:
DJC	CA	COP

DWG. NO. PW05
DATE 4/17/15
SHEET NO. 5 OF 7

LAKEVIEW PLAZA STORM EXTENSION

FILE NAME&PATH: H:\ENGINEERING\DESIGN\LAKEVIEW PLAZA\05 STM P&P.DWG

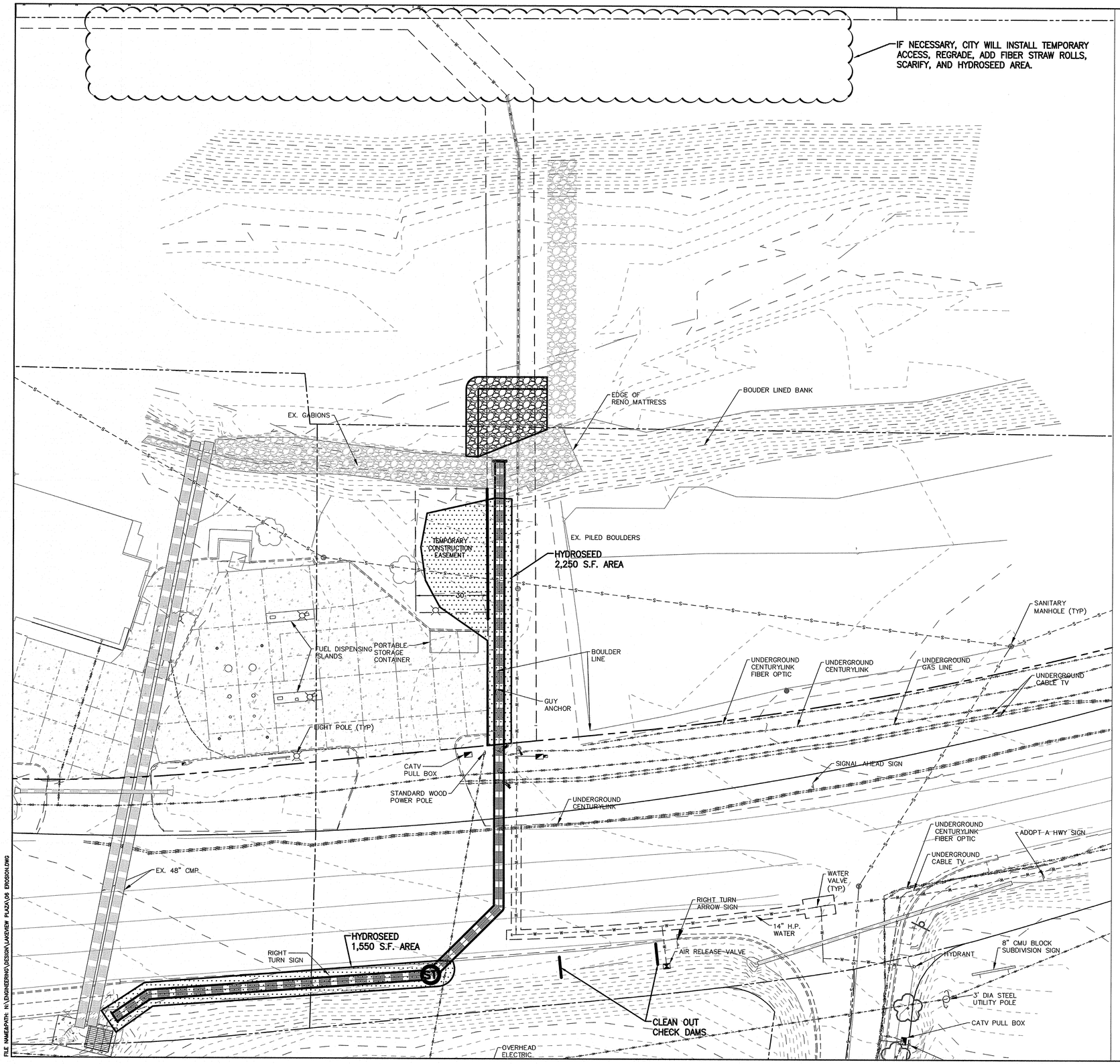

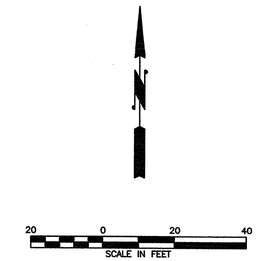

EROSION CONTROL GENERAL NOTES:

1. A COPY OF THE APPROVED GRADING AND DRAINAGE PLAN FOR THE STORM WATER POLLUTION PREVENTION PLAN (SWPPP) SHALL BE MAINTAINED ON THE SITE AND AVAILABLE FOR REVIEW. THOSE ELEMENTS OF THE GRADING AND DRAINAGE PLAN PERTINENT TO OR REFERENCED ON THE SWPPP SHALL BE CONSIDERED A PART OF THE SWPPP.
2. THE NOTICE OF INTENT (NOI) SHALL BE COMPLETED AND SUBMITTED TO THE ARIZONA DEPARTMENT OF ENVIRONMENTAL QUALITY (ADEQ) PRIOR TO ANY CONSTRUCTION ACTIVITY (INCLUDING CLEARING & GRUBBING AND GRADING).
3. THE SWPPP AND RELATED RECORDS MUST BE MADE AVAILABLE UPON REQUEST TO ADEQ AND THE CITY OF PRESCOTT.
4. THE PRIME CONTRACTOR SHALL PERFORM, AT A MINIMUM, A VISUAL INSPECTION OF THE CONSTRUCTION SITE ONCE EVERY SEVEN DAYS AND WITHIN 24 HOURS OF RAINFALL GREATER THAN OR EQUAL TO A HALF AN INCH (1/2-INCH). THE OPERATOR SHALL PREPARE A REPORT DOCUMENTING HS/HER FINDINGS ON THE CONDITIONS OF THE SWPPP CONTROLS AND NOTE ANY EROSION PROBLEM AREAS. THE OPERATOR'S REPORT IS TO BE MAINTAINED ON SITE BY THE OPERATOR. FACILITIES SHALL BE MAINTAINED AS NECESSARY TO ENSURE THEIR CONTINUED FUNCTIONING. IN ADDITION, ALL TEMPORARY SILTATION CONTROLS SHALL BE MAINTAINED IN A SATISFACTORY CONDITION UNTIL SUCH TIME THAT CONSTRUCTION IS COMPLETED, PERMANENT DRAINAGE FACILITIES ARE OPERATIONAL, AND THE POTENTIAL FOR EROSION HAS PASSED AS DETERMINED BY THE CITY ENGINEER OR HIS DESIGNEE.
5. THE IMPLEMENTATION OF THESE PLANS AND THE CONSTRUCTION, MAINTENANCE, REPLACEMENT, AND UPGRADING OF THESE FACILITIES IS THE RESPONSIBILITY OF THE PERMITTEE/CONTRACTOR UNTIL ALL INFRASTRUCTURE CONSTRUCTION IS ACCEPTED BY THE CITY OF PRESCOTT PUBLIC WORKS DEPARTMENT AND A NOTICE OF TERMINATION HAS BEEN SUBMITTED.
6. THE FACILITIES SHOWN ON THIS PLAN MUST BE CONSTRUCTED IN CONJUNCTION WITH ALL CLEARING AND GRADING ACTIVITIES IN SUCH A MANNER AS TO INSURE THAT SEDIMENT-LADEN WATER DOES NOT ENTER THE DRAINAGE SYSTEM OR VIOLATE APPLICABLE WATER STANDARDS. ADDITIONALLY, THEY MUST BE INSTALLED AND IN OPERATION PRIOR TO ANY GRADING OR LAND CLEARING. WHEREVER POSSIBLE, NATURAL VEGETATION SHOULD BE RETAINED AND MAINTAINED FOR SILT AND EROSION CONTROL.
7. THE GENERAL CONTRACTOR TO WHOM THE "AT-RISK"/FINAL GRADING PERMIT WILL BE ISSUED MUST BE INCLUDED ON THE APPROVED NOI ISSUED BY ADEQ.
8. THE OWNER (OPERATOR)/CONTRACTOR OF THE SITE MUST ALSO MAINTAIN RECORDS WITH THE FOLLOWING INFORMATION:
   - THE DATES WHEN MAJOR GRADING ACTIVITIES OCCUR IN A PARTICULAR AREA;
   - THE DATES WHEN CONSTRUCTION ACTIVITIES CEASE IN AN AREA, TEMPORARILY OR PERMANENTLY; AND
   - THE DATES WHEN AN AREA IS STABILIZED, TEMPORARILY OR PERMANENTLY; AND
   - THE DATES WHEN ANY MAINTENANCE/REPLACEMENT OR REMOVAL OF REQUIRED BMP'S.
9. CONSTRUCTION SITES ARE DYNAMIC IN NATURE. THE SITE OPERATOR IS REQUIRED TO MAINTAIN FULL COMPLIANCE WITH THE GENERAL CONSTRUCTION PERMIT, AS ISSUED BY ADEQ, TO MAINTAIN AN EFFECTIVE SWPPP. AS SUCH, THIS PLAN MUST BE UPDATED TO ACCURATELY REFLECT SITE FEATURES AND OPERATIONS WHICH MAY BECOME EVIDENT DURING CONSTRUCTION, AND/OR DURING OR AFTER RAINFALL EVENTS. THE PLAN MUST ALSO BE AMENDED IF IT IS DETERMINED BY THE DESIGN ENGINEER, OR THE CITY ENGINEER AS NOT EFFECTIVELY MINIMIZING EROSION AND SEDIMENT POLLUTANT DISCHARGES FROM THE SITE.
10. THE SCHEMATIC EROSION CONTROL MEASURES SHOWN ARE A MINIMUM. THE CONTRACTOR SHALL PROVIDE ALL NECESSARY MEANS TO PROTECT EXISTING FACILITIES AND ADJACENT PROPERTIES FROM NOISE, DUST, AND STORM WATER RUNOFF THROUGHOUT CONSTRUCTION OF THE PROJECT AND BUILDINGS ON LOTS, AND SHALL CONDUCT HIS OPERATIONS IN SUCH A MANNER THAT STORM WATER WILL BE CONTAINED ON SITE OR CHANNELED INTO A STORM DRAIN SYSTEM, PROVIDED THAT IT IS FREE FROM POLLUTANTS AND DEBRIS.
11. CONTRACTOR SHALL HYDRO-SEED ALL EXPOSED SLOPES EMPLOYING BEST MANAGEMENT PRACTICES AND/OR RECOMMENDED SOIL PREPARATION TO PROMOTE AND SUSTAIN GROWTH. ALL EROSION CONTROL STRUCTURES SHALL REMAIN IN PLACE UNTIL EXPOSED SLOPES HAVE BEEN PERMANENTLY STABILIZED. CONTRACTOR SHALL BE RESPONSIBLE FOR WATERING AND MAINTAINING HYDRO-SEED UNTIL STABILIZED. ANY DEVIATION SHALL BE APPROVED BY THE ENGINEER.
12. ALL SITE REVEGITATION SHALL BE COMPLETED WITHIN 90 DAYS OF COMPLETION OF GRADING WORK, OR PRIOR TO RELEASE OF SUBDIVISION GUARANTEE OR ISSUANCE OF CERTIFICATE OF OCCUPANCY, WHICH EVER OCCURS FIRST. PERMANENT BANK/SLOPE STABILIZATION SHALL BE CERTIFIED BY THE PROJECT ENGINEER OR LANDSCAPE ARCHITECT DOCUMENTING THE BANK/SLOPE STABILIZATION WAS COMPLETED ACCORDING TO PLAN PRIOR TO FINAL SUBDIVISION RELEASE OR CERTIFICATE OF OCCUPANCY.
13. CONTRACTOR SHALL PROTECT ALL PERMANENT AND EXISTING STORM WATER FACILITIES FROM SEDIMENT/SILT DURING CONSTRUCTION.
14. SILT FENCING AND/OR OTHER SEDIMENT CONTROL (I.E. STRAW WATTLES, HAY BALES, SILT FENCE, ETC.) SHALL BE USED AT THE TOE OF ANY ERODIBLE SLOPE, AND SHALL FOLLOW THE CONTOURS OF SITE SLOPES (DO NOT INSTALL SILT FENCE ACROSS ANY DRAINAGE COURSE).
15. ONCE THE CONSTRUCTION ACTIVITIES HAVE BEEN COMPLETED AND THE SITE HAS MET THE FINAL STABILIZATION REQUIREMENTS OF THE PERMIT, THE AUTHORIZED SITE REPRESENTATIVE MAY FILE A NOTICE OR TERMINATION (NOT) WITH ADEQ, WITH A COPY SUBMITTED TO THE CITY OF PRESCOTT ENGINEERING DIVISION TO TERMINATE COVERAGE UNDER THE PERMIT.

C. Winthrop Andrews, Jr.
Registered Professional Engineer (Civil)
CERTIFICATE NO. 39473
C. WINTHROP ANDREWS, SR.
Date Signed 4/17/15
ARIZONA U.S.A.
Expires 9/30/15

CITY OF PRESCOTT PUBLIC WORKS

EROSION CONTROL PLAN

DWG. NO. PW06
DATE 4/17/15
SHEET NO. 6 OF 7

LAKEVIEW PLAZA STORM EXTENSION

CITY OF PRESCOTT
Everything's Hometown

PREPARED BY DJC | CHECKED BY CA | FOR: COP

NO.	BY	DATE	REVISIONS	APPR/ CITY	DATE

ENGINEER

REVIEW:

CIP #: 10-024

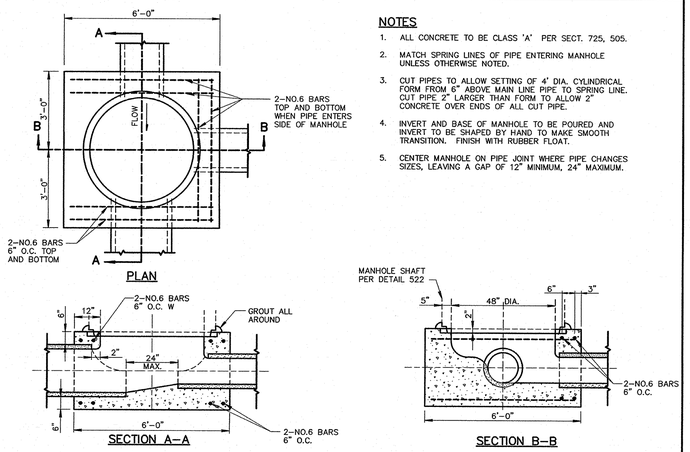

NOTES

1. ALL CONCRETE TO BE CLASS 'A' PER SECT. 725, 505.
2. MATCH SPRING LINES OF PIPE ENTERING MANHOLE UNLESS OTHERWISE NOTED.
3. CUT PIPES TO ALLOW SETTING OF 4' DIA. CYLINDRICAL FORM FROM 6" ABOVE MAIN LINE PIPE TO SPRING LINE. CUT PIPE 2" LARGER THAN FORM TO ALLOW 2" CONCRETE OVER ENDS OF ALL CUT PIPE.
4. INVERT AND BASE OF MANHOLE TO BE POURED AND INVERT TO BE SHAPED BY HAND TO MAKE SMOOTH TRANSITION. FINISH WITH RUBBER FLOAT.
5. CENTER MANHOLE ON PIPE JOINT WHERE PIPE CHANGES SIZES, LEAVING A GAP OF 12" MINIMUM, 24" MAXIMUM.

DETAIL NO.			REVISED	DETAIL NO.
520	MARICOPA ASSOCIATION of GOVERNMENTS STANDARD DETAIL ENGLISH	STORM DRAIN MANHOLE BASE (48" AND SMALLER)	01-01-1998	520

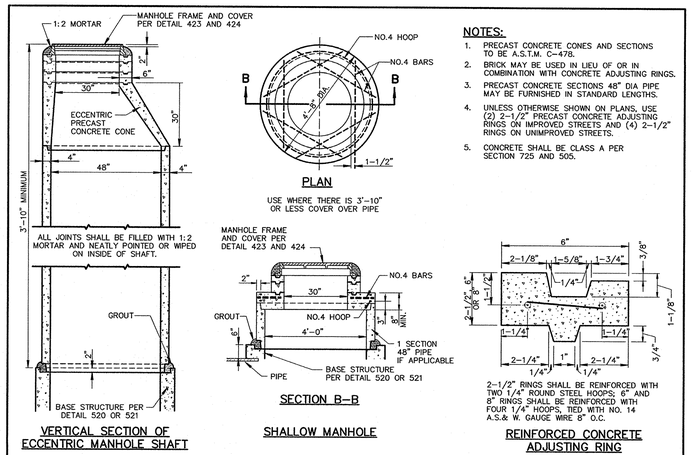

NOTES:

1. PRECAST CONCRETE CONES AND SECTIONS TO BE A.S.T.M. C-478.
2. BRICK MAY BE USED IN LIEU OF OR IN COMBINATION WITH CONCRETE ADJUSTING RINGS.
3. PRECAST CONCRETE SECTIONS 48" DIA PIPE MAY BE FURNISHED IN STANDARD LENGTHS.
4. UNLESS OTHERWISE SHOWN ON PLANS, USE (2) 2-1/2" PRECAST CONCRETE ADJUSTING RINGS ON IMPROVED STREETS AND (4) 2-1/2" RINGS ON UNIMPROVED STREETS.
5. CONCRETE SHALL BE CLASS A PER SECTION 725 AND 505.

DETAIL NO.			REVISED	DETAIL NO.
522	MARICOPA ASSOCIATION of GOVERNMENTS STANDARD DETAIL ENGLISH	STORM DRAIN MANHOLE SHAFT	01-01-2015	522

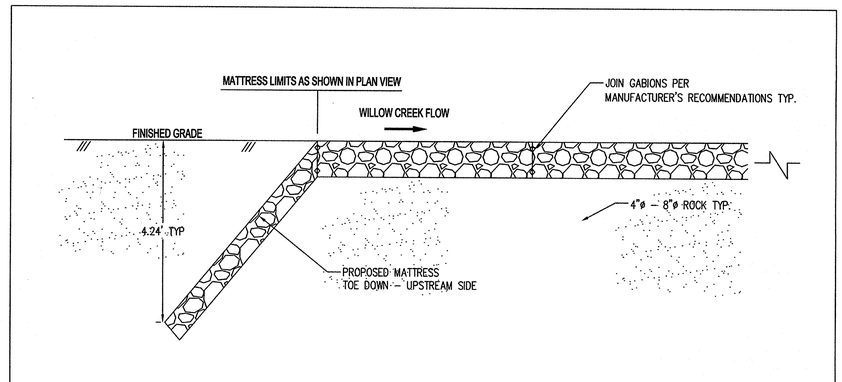

MATTRESS TOE DOWN TYPICAL DETAIL

NTS

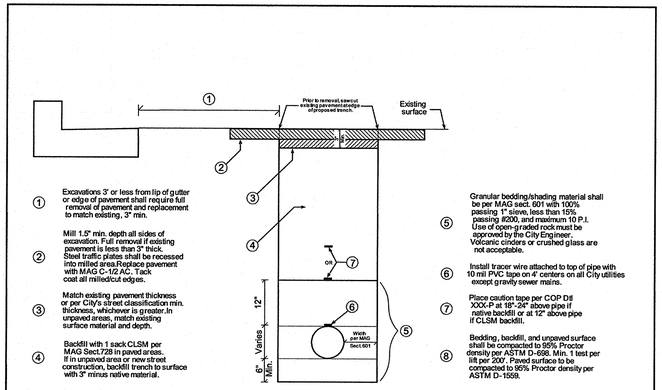

1. Excavations 3' or less from lip of gutter or edge of pavement shall require full removal of pavement and replacement to match existing, 3" min.
2. Mill 1.5" min. depth all sides of excavation. Full removal if existing pavement is less than 3" thick. Steel traffic plates shall be recessed into milled area.Replace pavement with MAG C-1/2 AC. Tack coat all milled/cut edges.
3. Match existing pavement thickness or per City's street classification min. thickness, whichever is greater.In unpaved areas, match existing surface material and depth.
4. Backfill with 1 sack CLSM per MAG Sect.728 in paved areas. If in unpaved area or new street construction, backfill trench to surface with 3" minus native material.
5. Granular bedding/shading material shall be per MAG sect. 601 with 100% passing 1" sieve, less than 15% passing #200, and maximum 10 P.I. Use of open-graded rock must be approved by the City Engineer. Volcanic cinders or crushed glass are not acceptable.
6. Install tracer wire attached to top of pipe with 10 mil PVC tape on 4' centers on all City utilities except gravity sewer mains.
7. Place caution tape per COP D# XXX-P at 18"-24" above pipe if native backfill or at 12" above pipe if CLSM backfill.
8. Bedding, backfill, and unpaved surface shall be compacted to 95% Proctor density per ASTM D-698. Min. 1 test per lift per 200'. Paved surface to be compacted to 95% Proctor density per ASTM D-1559.

COP STANDARD DETAIL	T-TOP PAVEMENT REPLACEMENT	CITY ENGINEER	REVISED:	DETAIL No. 2-01P MOD

TLN2 Pedestrian Rated Aluminum SAFE HATCH®

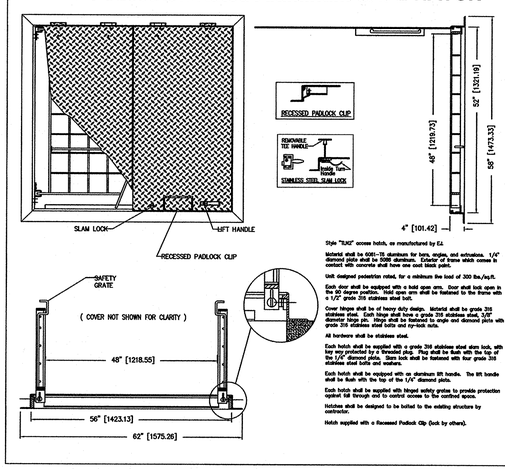

Style "SLNO" access hatch, as manufactured by EJ.

Material shall be 6061-T6 aluminum for bars, angles, and extrusions. 1/4" diamond plate shall be 5086 aluminum. Exterior of frame which comes in contact with concrete shall have one coat black paint.

Unit designed pedestrian rated, for a minimum live load of 300 lbs./sq.ft.

Each door shall be equipped with a hold open arm. Door shall lock open in the 90 degree position. Hold open arm shall be fastened to the frame with a 1/2" grade 316 stainless steel bolt.

Cover hinges shall be of heavy duty design. Material shall be grade 316 stainless steel. Each hinge shall have a grade 316 stainless steel, 3/8" diameter hinge pin. Hinge shall be fastened to angle and diamond plate with grade 316 stainless steel bolts and zy-lock nuts.

All hardware shall be stainless steel.

Each hatch shall be supplied with a grade 316 stainless steel slam lock, with a stainless steel T handle, and provision for a padlock. Plug shall be flush with the top of the 1/4" diamond plate. Slam lock shall be fastened with four grade 316 stainless steel bolts and washers.

Each hatch shall be equipped with an aluminum lift handle. The lift handle shall be flush with the top of the 1/4" diamond plate.

Each hatch shall be supplied with hinged safety grates to provide protection against fall through and to control access to the confined space.

Hatches shall be designed to be bolted to the existing structure by contractor.

Hatch supplied with a Recessed Padlock Clip (lock by others).

Product Number
H46462993

Design Features
-Materials
Aluminum
-Design Load
Pedestrian Rated 300 psf

TLN2
-Coating
Mill Finish

Certification
NPR13-4227
WT 202 lbs
-Country of Origin: Made in USA

Drawing Revision
100/013 Designer: JMM
Revised By:

Disclaimer
Weights (lbs/kg), dimensions (inches/mm) approximate. Data provided for product guidance. We reserve the right to modify specifications without prior notice.

CONFIDENTIAL: This drawing is the property of EJ Group, Inc. and embodies confidential information, registered marks, patents, trade secret information, and/or know-how that is the property of EJ Group, Inc. Copyright © 2011 EJ Group, Inc. All rights reserved.

Contact
800 626 4653
ejco.com

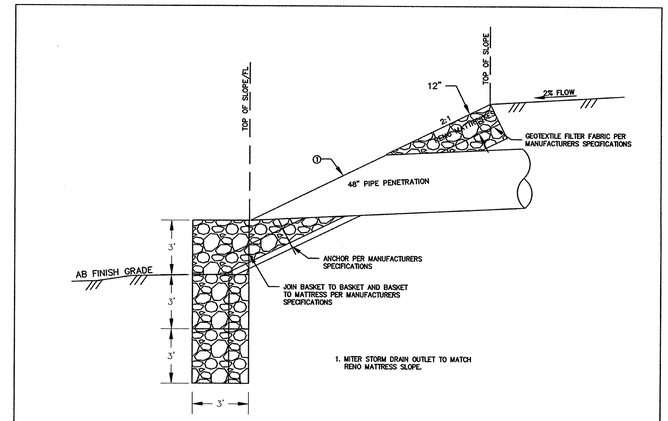

CHANNEL SLOPE AND OUTLET PROTECTION – WILLOW CREEK

NTS

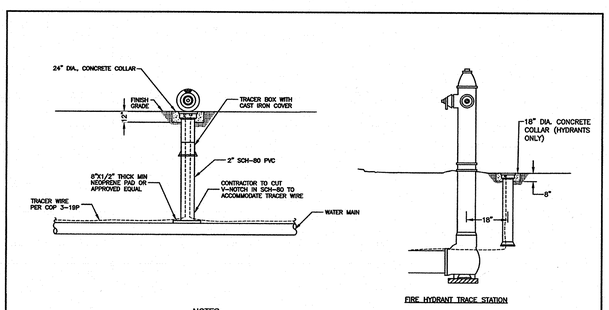

NOTES:

1. TRACER BOX AND CAST IRON COVER SHALL BE CORPPERHEAD INDUSTRIES, LLC SENSOR® OR APPROVED EQUAL, MODEL RB14PTP SR; CD14-CP OR APPROVED EQUAL. LID DOLLOR SHALL CONTAIN WITH TYPE OF UTILITY.
2. MAXIMUM DISTANCE BETWEEN TRACER WIRE POINT OF CONTACT SHALL BE 500'.
3. ATTACH TRACER WIRE TO PIPE AT 6' INTERVALS.

COP STANDARD DETAIL	TRACER WIRE STATION	CITY ENGINEER	REVISED: 01/15	DETAIL No. 3-19AP

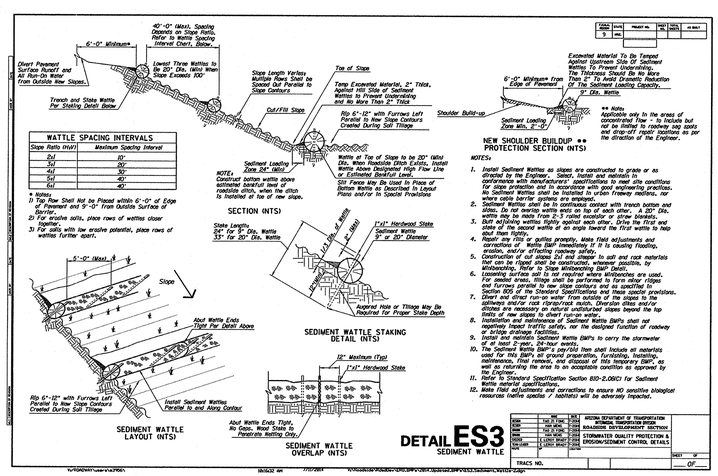

NOTES:

1. Install Sediment Wattles on slopes are constructed to grade or as directed by the Engineer. Select, install and maintain in conformance with manufacturers' specifications to meet site conditions for slope protection and in accordance with good engineering practices. No Sediment Wattles shall be installed in urban freeway medians, nor in areas of high pedestrian traffic.
2. Sediment Wattles shall be in continuous contact with intact bottom and sides. Do not overlap wattle ends on top of each other. A 20" Dia. wattle may be made from 2-3' rolled excelsior or straw blankets.
3. Butt adjoining wattles tightly against each other. Drive the first end stake of the second wattle at an angle toward the first wattle to help draw them together.
4. Repair, replace or gullies promptly. Make field adjustments and corrections of Wattle BMP immediately if it is causing flooding, erosion, and/or affecting roadway safety.
5. Construction of cut slopes 2:1 and steeper to salt and rock materials that can be ripped shall be constructed, whenever possible, by constructing the toe of the slope first and ripping the top.
6. Loosening surface soil to not compacted where wattlestakes are used. For seeded areas, Tillage shall be performed to form minor ridges and furrows parallel to new slope contours and as specified in Section 805 of the Standard Specifications and these special provisions.
7. Control and direct run-on water from outside of the slopes to the stabilized and/or rock diversion/rock outlet. Diversion dikes and/or ditches shall be used to divert the concentrated flows beyond the top limits of new slopes to divert run-on water.
8. Installation and maintenance of Sediment Wattle BMPs shall not negatively impact traffic safety, nor the designed function of roadway or bridge drainage facilities.
9. Install Sediment Wattle Wattle BMPs to carry the stormwater of at least 2-year, 24-hour events.
10. The Sediment Wattle BMP's pre/post then shall include all materials used for this BMP, all ground preparation, furnishing, installing, maintenance, final removal, and disposal of this temporary BMP, as well as returning the area to an acceptable condition as approved by the Engineer.
11. Refer to Standard Specification Section 810-2.06(C) for Sediment Wattle material specifications.
12. Make field adjustments and corrections to ensure NO sensitive biological resources (native species / habitats) will be adversely impacted.

DETAIL ES3
SEDIMENT WATTLE

REVISED	7/01/2014		ARIZONA DEPARTMENT OF TRANSPORTATION	
REVISED	7/01/2009		STORMWATER QUALITY PROTECTION &	
REVISED	1/01/2008		EROSION/SEDIMENT CONTROL DETAILS	
REVISED	1/01/2007			
REVISED	1/01/2006			
REVISED	1/01/2005			
REVISED	1/01/2004			
REVISED	1/01/2003			
REVISED