Mark Nietupski, Public Works Director

CITY OF PRESCOTT ARIZONA
Everybody's Hometown

433 N. Virginia Street
Prescott, AZ 86301
928-777-1130

ADDENDUM NUMBER ONE
to the
PROJECT SPECIFICATIONS
and
CONTRACT DOCUMENTS
for
FY 13 & 14 Water Main Upgrades Phase 1 Project

DATE OF ADDENDUM: **March 13, 2014**

BID OPENING: **March 20, 2014 at 2:00 PM, MST (POSTPONED)**

AMENDED BID OPENING: **March 27, 2014 at 2:00 PM, MST**

TO ALL BIDDERS BIDDING ON THE ABOVE PROJECT:

The following addendum shall be made part of the Contract Documents. All other provisions of the Contract Documents remain unchanged. The Bidder shall acknowledge receipt of this addendum on page 13 of the Proposal by inserting the addendum number and date on the executed page of the Proposal. The contents of this Addendum shall be given full consideration in the preparation of the Bid.

CLARIFICATIONS

1. See attached **Exhibit 'A'** Revised Bid Schedule.

2. The item number in the Bid Schedule has been revised to correspond to the specification number.

3. A number of quantities in the Bid Schedule have been revised as follows:

   - Item (350.2a) has been changed from 1 LS to 100 LF
   - Item (350.2b) has been changed from 1 LS to 100 LF
   - Item (610.11c) increased from 5 EA to 6 EA
   - Item (610.11b) increased from 49 EA to 51 EA
   - Item (610.11d) decreased from 30 EA to 15 EA
   - Item (610.12) decreased from 37 EA to 35 EA
   - Item (615.8a) decreased from 56 EA to 50 EA
   - Item (615.8b) increased to 10 EA

4. Temporary striping on Miller Valley Road has been added to the Bid Schedule as follows:

   - Item 402.3a Temporary Striping – Yellow Paint
   - Item 402.3b Temporary Striping – White Paint

5. All bids shall be based on the updated Bid Schedule, which supersedes the original Bid Schedule and quantity table on Sheet 5 of the Construction Plans.

6. Section 610-11b specifies "gate valve in #1 meter box" for the private water service lines. The COP detail 3-16P has a customer Shut Off Valve (SOV) in a #1 meter box. There should only be one (1) private meter box with one (1) valve and one (1) City meter box per service.

7. Bid item 615.2b does not specify the size of pipe or if the service is to be connected to the existing lateral wyes along the sewer main. The detail cited in the keynote (4-02P) specifies replacement of at least one full DIP joint. The contractor will need to verify size and extent of replacement. The City anticipates that these sewer service replacements may be avoided; they are included only in the event a sewer service is broken.

8. Project Sequencing and night work will be required for installation of new water service connections in Miller Valley Road. See specifications for project sequencing and night work in the Special Provisions section below.

9. The material supplier shall abide by the new lead free requirements passed in the Reduction of Lead in Drinking Water Act, Section 1417 of the Safe Drinking Water Act which went into effect January 4th, 2014. The material supplier shall produce evidence, as part of the submittal process, which reflects certified compliance.

10. Asbestos removal certifications: The City requires the Contractor to abide by 350-2, Removal and Disposal of Asbestos Cement Pipe. The specification does not require the Contractor to possess a certification to remove the asbestos, however it does require the Contractor to secure a qualified, licensed asbestos abatement Consultant.

11. The bidder shall hold a KA Dual Engineering Contractors License or other classification to perform work within the Public Right of Way and to perform or subcontract portions of the work on private property as determined by the Arizona Registrar of Contractors.

12. The Public Works Engineering Inspector will be responsible for all inspections on private property (cross lot connections & backwater valves). The Building Department will issue a building permit but will not inspect the corresponding work.

13. Most sewer services should be 4-inches in diameter however this must be established by potholing the location where a backwater valve will be installed. The City recognizes that there are a number of commercial properties which may have 6-inch sewer service lines. A total of 60, 4-inch diameter backwater valves were to be installed. The bid tab number has been changed to represent 50, 4-inch diameter and 10, 6-inch diameter backwater valves to be installed.

14. Is the vertical realignment incidental to the waterline that will be installed or is it a separate pay item? The vertical realignment is not a separate pay item. Please read specification 610 and 610.1. No separate payment is made. The cost for this should be included in your cost for the water main installation.

15. Will the City provide the soils reports with the boring logs? The City can supply the soils report with a written request from the Contractor to the City Project Manager via e-mail.

16. Will the City of Prescott provide a staging area either on site of the project or nearby the project? No, the City does not provide staging for the Contractor. It is the Contractors responsibility to research staging areas for his equipment and materials. The Contractor must supply the City with a written agreement between the property owner and the Contractor if private property will be used for mobilization and storage. Please see Waste Disposal, Grading and Material Storage on Page 31 in the General Conditions.

CONSTRUCTION PLANS

1. Sheet 4 – the MAG 303-1, 303-2 detail includes hydrant tees, which must be restrained along the main accordingly.

2. Sheet 4 – The sewer backwater valve detail shows a new sewer lateral on the public side of the valve. The intent is to cut just enough of the existing service line out to install the new valve. New sewer service line and fittings to the existing sewer main is not required.

3. Sheet 5 – replace quantity table with attached **Exhibit 'B'** revised master Bid Schedule.

4. Sheet 5 – Bid item #31 (610.11c) should be a 1" water service, not ¾".

5. Sheet 13 – for parcel 113-06-021B there is a note to "connect new service to existing water main". This water service should have a 13A keynote.

6. Sheet 21 – a 4" 90 is shown at the end of the waterline. This is also the location for a 2" Blow Off. This 4" 90 can be eliminated with a 4" cap & the 2" Blow Off copper to the final location.

7. Sheet 23 – at 12+03.48 there is a water service approximately 175 feet in length. Typically splices on copper are not allowed. However, since the maximum roll of copper is 100 feet this restriction will be waived and a compression coupling will be allowed.

8. Sheet 24 – The new water service for Parcel 113-07-031A should be 1" (keynote 13B).

TECHNICAL SPECIFICATIONS

1. DELETE Section **200.2 Bypass Pumping**, E. Measurement and Payment in its entirety.

   ADD Section **200.2 Bypass Pumping**, E. Measurement and Payment: Payment for By-pass Pumping is incidental to the Sewer Main Replacement.

2. ADD Section **402.3 Temporary Striping**

   402.3 Temporary Striping

   Work under this item, Temporary Striping (paint) where required, shall be performed per ADOT Specifications Section 701-3.05. Measurement and payment shall be per ADOT Section 708-4 and 708-5.

   Pay Item: 402.3a Temporary Striping – Yellow Paint
   Pay Item: 402.3b Temporary Striping – White Paint

3. REVISE Section **610.12 Traffic Rated Concrete Meter Boxes**

ADD Section C:

C. Work shall include traffic rated lids for the No. 1 valve boxes behind the No. 2 meter boxes.

ADD Section D:

D. Traffic rated concrete meter boxes and traffic rated lids for valve boxes shall be installed at the following locations.

- 717 N Walnut St
- 728 N Walnut St
- 729 N Walnut St
- 731 N Walnut St
- 777 N Walnut St
- 789 N Walnut St
- 801 N Walnut St
- 802 N Walnut St
- 806 N Walnut St
- 813 N Walnut St
- 814 N Walnut St
- 815 N Walnut St
- 817 N Walnut St
- 818 N Walnut St
- 819 N Walnut St
- 820 N Walnut St
- 826 N Walnut St
- 831 N Walnut St
- 840 N Walnut St
- 612 Miller Valley Rd
- 624 Miller Valley Rd
- 628 Miller Valley Rd
- 650 Miller Valley Rd
- 701 Miller Valley Rd
- 711 Miller Valley Rd
- 731 Miller Valley Rd
- 732 Division St
- 734 Division St
- 738 Division St
- 740 Division St
- 806 Division St
- 818 Division St
- 716 1st St, Unit B
- 718 1/2 1st St
- 720 1st St

SPECIAL PROVISIONS

1. REVISE Section **630.5 Custom Welded 6" Tapping Outlet, Box and Cover**

   REPLACE Section C with:

   C. The Contractor shall add the cost of this work to the unit price bid in the bidding schedule for custom welded tapping outlet, valve, box and cover. Custom welded tapping outlet shall be a full wrap ROMAC INDUSTRIES, INC. or approved equal and shall be installed in accordance with the manufacturer's recommendations. See attached **Exhibit 'C'** for details and specifications.

2. ADD Section **100.1.D Project Sequencing**

   The Contractor shall schedule his work as follows:

   Miller Valley Road – The City of Prescott currently has the FY 2014 Pavement Reconstruction Project in the bidding process. The Pavement Reconstruction Project includes pavement repairs, milling, and pavement overlay on Miller Valley Road from Hillside Avenue to Whipple Street. The Contractor for the FY 13 & 14 Small Water Mains Project shall make their work on Miller Valley Road the first priority to allow for the Pavement Reconstruction Project to proceed in a timely manner. Once begun, the water improvements on Miller Valley Road shall be done to completion without delays or gaps in the work.

No extra payment shall be made for meeting the above stated requirements. The City shall have the right to make modifications to these requirements in the best interest of the community.

3. Add Section **100.1.E Night Work**

   To minimize the inconvenience to local businesses and the traveling public, the work on Miller Valley Road shall be performed at night time between the hours of 6:00 PM and 5:00 AM on week nights, starting on Sunday night and ending on Friday morning. Utility and traffic control adjustments shall also be accomplished during night working hours. Before the end of the working day or night, temporary traffic striping shall be installed.

   No extra payment shall be made for meeting the above stated requirements. The City shall have the right to make modifications to these requirements in the best interest of the community.

4. REVISE Section **610.11.b Private Water Service Line Reconnection**

   REPLACE Section A with:

   A. The Contractor will be required to install private water service line from the new water meter location to a point at the existing water meter location or to a point of connection to the existing service line for the residential property. Contractor shall remove existing valves and reduce pressure zone assembly, if present, and relocate as shown on the plot plans for the individual lots located in the Appendix of this Special Provisions. All private service lines shall be PEX tubing or an approved equal installed in accordance with the manufacturer's recommendations and the most recent version of the International Plumbing Code. The Contractor shall maintain a minimum of two (2) feet of cover material over new private water service line and utilize existing in-situ material for backfill. The Contractor shall supply all necessary material for new private water service installation including a gate valve, in an accessible box per Y.A.G. Std. Dtl. 3-16.

5. REVISE Section **610.11.d Private Water Service Line Reconnection (Commercial)**

   REPLACE Section A with:

   A. The Contractor will be required to install private water service line from the new water meter location to a point at the existing water meter location or to a point of connection to the existing service line for the commercial property. This point of connection shall be a maximum of a ten-foot radius from the meter location. Contractor shall remove existing valves and reduce pressure zone assembly, if present, and relocate as shown on the plot plans for the individual lots located in the Appendix of this Special Provision. All private service lines shall be PEX tubing or approved equal installed in accordance with the manufacturer's recommendations and the most recent version of the International Plumbing Code. The Contractor shall maintain a minimum of two (2) feet of cover material over new private water service line and utilize existing in-situ material for backfill. The Contractor shall secure all necessary building permits and approvals and supply all material for new private water service installation including a gate valve, in an accessible box per Y.A.G. Std. Dtl. 3-16 and include all appurtenant fittings to connect to existing service line.

6. REVISE Section **615.8 Sanitary Sewer Backwater Valve Assembly (New Section)**

   REPLACE the Pay Item with:

   Pay Item: 615.8a Sanitary Sewer 4" Backwater Valve Assembly
   Pay item: 615.8b Sanitary Sewer 6" Backwater Valve Assembly

7. The plot plans for private service reconnections should be added into the Appendix located at the back of the Special Provisions. The plot plans will be available with other addendum items on the City of Prescott web site and a disc will be mailed out to all bidders or plan rooms.

ATTACHMENTS:

Exhibit 'A' – Revised Bid Schedule

Exhibit 'B' – Revised Master Bid Schedule

Exhibit 'C' - Romac Industries custom welded tapping outlet

Plot Plans – 68 pages

– END –

City of Prescott, Public Works Department

Joel Berman for 3/13/14

Mark Nietupski, Public Works Director

Acknowledgement: (**must** be signed and turned in with the bid documents)

Company Name _____ Date _____

Signature of Company Official _____ Date _____

EXHIBIT "A" - REVISED BID SCHEDULE
FY 13 & 14 WATER MAIN UPGRADES PHASE 1 PROJECT

ITEM	DESCRIPTION	QTY	UNIT	UNIT COST	TOTAL
100.4	PUBLIC RELATIONS ALLOWANCE	1	LS	$ 25,000.00	$25,000.00
104.3	MOBILIZATION	1	LS		
105.8	CONSTRUCTION STAKING	1	LS		
107.11	STORM WATER POLLUTION PREVENTION PLAN	1	LS		
109.11	CONTRACT ALLOWANCE	1	LS	$ 112,000.00	$112,000.00
220.5a	RIPRAP PLACEMENT (D50=6")	10	SY		
220.5b	RIPRAP PLACEMENT (D50=12")	80	SY		
330.1	ASPHALT CHIP SEAL	9,573	SY		
336.5	SAWCUT, REMOVE & REPLACE AC PAVEMENT	2,250	SY		
340.1	CONCRETE CURB, GUTTER & CURB TERMINATIONS	104	LF		
340.2	CONCRETE SIDEWALK, LANDING & RAMP	340	SF		
340.5	CONCRETE VALLEY GUTTER	15	SF		
350.2a	REMOVAL DISPOSAL OF NON-FRIABLE ACP AND TRENCH BACKFILL	100	LF		
350.2b	REMOVAL DISPOSAL OF FRIABLE ACP AND TRENCH BACKFILL	100	LF		
401.7a	TRAFFIC CONTROL PLAN	1	LS		
401.7b	FLAGGERS	240	HR		
401.7c	OFF-DUTY POLICE OFFICERS	60	HR		
401.7d	BARRICADES & SIGNAGE	1	LS		
401.7e	MESSAGE BOARDS	4	EA/DAY		
401.7f	PILOT CAR & DRIVER	240	HR		
401.7g	INCIDENTAL TRAFFIC-RELATED ITEMS	1	LS		
601.2.11	ROCK REMOVAL (TRENCH)	1,000	CY		
610.1a	4" DUCTILE IRON WATERLINE	1,010	LF		
610.1b	6" DUCTILE IRON WATERLINE	1,985	LF		
610.1c	8" DUCTILE IRON WATERLINE	760	LF		
610.2	REVERSE THURST BLOCK	3	EA		
610.9	FURNISH & INSTALL FIRE HYDRANT ASSEMBLY	7	EA		
610.11a.1	NEW 1" WATER SERVICE WITH 5/8" SALVAGED METER	105	EA		
610.11a.2	NEW 1" WATER SERVICE WITH 1" SALVAGED METER	3	EA		
610.11a.3	NEW 1-1/2" WATER SERVICE WITH 1-1/2" SALVAGED METER	2	EA		
610.11c	NEW 1" COPPER WATER SERVICE & EMPTY BOX	6	EA		
610.11b	PRIVATE WATER SERVICE LINE RECONNECTION	51	EA		
610.11d	PRIVATE WATER SERVICE LINE RECONNECTION (COMMERCIAL)	15	EA		
610.12	TRAFFIC RATED CONCRETE METER BOX	35	EA		
610.30	WATER MAIN ABANDONMENT	3,410	LF		
610.40	WATER MAIN REMOVAL	2,395	LF		
610.50	FLY LINE INSTALLATION	2,395	LF		
615.2a	SEWER MAIN REPLACEMENT	3	EA		
615.2b	SEWER SERVICE REPLACEMENT	2	EA		
615.8a	4" SANITARY SEWER BACKWATER VALVE ASSEMBLY	50	EA		
615.8b	6" SANITARY SEWER BACKWATER VALVE ASSEMBLY	10	EA		
630.3a	4" GATE VALVE, BOX & COVER	4	EA		
630.3b	6" GATE VALVE, BOX & COVER	4	EA		

EXHIBIT "A" - REVISED BID SCHEDULE
FY 13 & 14 WATER MAIN UPGRADES PHASE 1 PROJECT

ITEM	DESCRIPTION	QTY	UNIT	UNIT COST	TOTAL
630.3c	8" GATE VALVE, BOX & COVER	9	EA		
630.4a	6" TAPPING SLEEVE, VALVE, BOX & COVER	1	EA		
630.4b	8" TAPPING SLEEVE, VALVE, BOX & COVER	1	EA		
630.5	CUSTOM WELDED TAPPING OUTLET & VALVE	1	EA		
630.6a	AIR/VACUUM RELEASE VALVE ASSEMBLY	6	EA		
630.6b	BLOW-OFF ASSEMBLY	4	EA		
403.3	CONCRETE FILLED STEEL BOLLARDS	3	EA		
403.2a	TEMPORARY STRIPING - YELLOW PAINT	100	LF		
403.2b	TEMPORARY STRIPING - WHITE PAINT	100	LF		

Total _____

Total Bid:

_____ Dollars
(Written Words)

_____ _____
Signature of Company Official Title

_____ _____
Company Name Phone Number

_____ _____
Address Fax Number

_____ _____
City/State Zip Code

EXHIBIT "B" - REVISED MASTER BID SCHEDULE
FY 13 & 14 WATER MAIN UPGRADES PHASE 1 PROJECT

KEYNOTE	ITEM	DESCRIPTION	WALNUT STREET	MILLER Vly RD	DIVISION STREET	ALLEY (1ST/CAMP)	OSBURN STREET	MADISON AVENUE	CAMPBELL AVENUE	MONTEZUMA STREET	QTY	UNIT
-	100.4	PUBLIC RELATIONS ALLOWANCE									1	LS
-	104.3	MOBILIZATION									1	LS
-	105.8	CONSTRUCTION STAKING									1	LS
-	107.11	STORM WATER POLLUTION PREVENTION PLAN									1	LS
-	109.11	CONTRACT ALLOWANCE									1	LS
1A	220.5a	RIPRAP PLACEMENT (D50=6")				10					10	SY
1B	220.5b	RIPRAP PLACEMENT (D50=12")						80			80	SY
2	330.1	ASPHALT CHIP SEAL	3,655		3,565	920		1,433			9,573	SY
3	336.5	SAWCUT, REMOVE & REPLACE AC PAVEMENT	850	215	330	290	120	415	30		2,250	SY
4	340.1	CONCRETE CURB, GUTTER & CURB TERMINATIONS	5	36	40	5		10	8		104	LF
5	340.2	CONCRETE SIDEWALK, LANDING & RAMP	35	120	115	35	15	10	10		340	SF
6	340.5	CONCRETE VALLEY GUTTER	5		5			5			15	SF
-	350.2a	REMOVAL DISPOSAL OF NON-FRIABLE ACP & TRENCH									100	LF
-	350.2b	REMOVAL DISPOSAL OF FRIABLE ACP AND TRENCH BACKFILL									100	LF
-	401.7a	TRAFFIC CONTROL PLAN									1	LS
-	401.7b	FLAGGERS									240	HR
-	401.7c	OFF-DUTY POLICE OFFICERS									60	HR
-	401.7d	BARRICADES & SIGNAGE									1	LS
-	401.7e	MESSAGE BOARDS									4	EA/DAY
-	401.7f	PILOT CAR & DRIVER									240	HR
-	401.7g	INCIDENTAL TRAFFIC-RELATED ITEMS									1	LS
-	601.2.11	ROCK REMOVAL (TRENCH)									1,000	CY
7	610.1a	4" DUCTILE IRON WATERLINE				185	505	320			1,010	LF
8	610.1b	6" DUCTILE IRON WATERLINE	1,360			625					1,985	LF
9	610.1c	8" DUCTILE IRON WATERLINE					160	600			760	LF
10	610.1	WATERLINE FITTING (NO PAY ITEM)	3		1	7	11	12		2	36	EA
11	610.2	REVERSE THURST BLOCK			1					2	3	EA
12	610.9	FURNISH & INSTALL FIRE HYDRANT ASSEMBLY	3			1	1	2			7	EA
13A	610.11a.1	NEW 1" WATER SERVICE WITH 5/8" SALVAGED METER	33	7	19	26	6	12	2		105	EA
13B	610.11a.2	NEW 1" WATER SERVICE WITH 1" SALVAGED METER		2				1			3	EA
13C	610.11a.3	NEW 1-1/2" WATER SERVICE WITH 1-1/2" SALVAGED METER		1			1				2	EA
13D	610.11c	NEW 1" COPPER WATER SERVICE & EMPTY BOX	3		2	1					6	EA
14	610.11b	PRIVATE WATER SERVICE LINE RECONNECTION	30		19				2		51	EA
15	610.11d	PRIVATE WATER SERVICE LINE RECONNECTION-COMMERCIAL	1	11	3						15	EA
16	610.12	TRAFFIC RATED CONCRETE METER BOX	19	3	6	3	4				35	EA
17	610.20	CONCRETE ENCASEMENT									0	EA
18A	610.30	WATER MAIN ABANDONMENT	1,110		1,555		135	200		410	3,410	LF
18B	610.40	WATER MAIN REMOVAL				810	665	920			2,395	LF
18C	610.50	FLY LINE INSTALLATION				810	665	920			2,395	LF
19	615.2a	SEWER MAIN REPLACEMENT				1		2			3	EA
20	615.2b	SEWER SERVICE REPLACEMENT				2					2	EA
21	615.8a	4" SANITARY SEWER BACKWATER VALVE ASSEMBLY	29	3	18						50	EA
21	615.8b	6" SANITARY SEWER BACKWATER VALVE ASSEMBLY	2	6	2						10	EA
22	630.3a	4" GATE VALVE, BOX & COVER				1	1	2			4	EA
23	630.3b	6" GATE VALVE, BOX & COVER	2			1		1			4	EA
24	630.3c	8" GATE VALVE, BOX & COVER				2	2	5			9	EA
25	630.4a	6" TAPPING SLEEVE, VALVE, BOX & COVER				1					1	EA
26	630.4b	8" TAPPING SLEEVE, VALVE, BOX & COVER	1								1	EA
27	630.5	CUSTOM WELDED TAPPING OUTLET & VALVE	1								1	EA
28	630.6a	AIR/VACUUM RELEASE VALVE ASSEMBLY	2			2	1	1			6	EA
29	630.6b	BLOW-OFF ASSEMBLY				1	1	2			4	EA
30	403.3	CONCRETE FILLED STEEL BOLLARDS					3				3	EA
-	403.2a	TEMPORARY STRIPING - YELLOW PAINT		100							100	LF
-	403.2b	TEMPORARY STRIPING - WHITE PAINT		100							100	LF

EXHIBIT "C"

ROMAC INDUSTRIES INC.

STYLE FTS445 WELD-ON TAPPING SLEEVE

SUBMITTAL INFORMATION

Materials

Body	ASTM A 36 Steel Plate rolled to the contour of the pipe.
Flange	AWWA Class D Steel Ring Flange, compatible with ANSI Class 125 and 150 bolt circles, are standard. All flanges are counterbored to accept the raised face of tapping valves per MSS SP-60. Other flange styles are available.
Coatings	Shop coat applied to parts for corrosion protection in transit. Fusion bonded epoxy, liquid epoxy and other coatings available on request.
Pressure	When properly installed, the Romac Style FTS445 can work at pressures up to the maximum rating of the flange. AWWA Class D flanges, sizes 4 - 12 inch, maximum working pressure is 175 psi and a maximum test pressure of 220 psi. For flange sizes 14" and larger the maximum working pressure is 150 psi and the maximum test pressure is 188. Higher pressure ratings can be accommodated. Consult your representative.
SIZES AND RANGES	See Catalog. Other sizes available on request.

Romac Document Number 30-8-0009 9/04

This information is based on the best data available at the date printed above, please check with Romac Engineering Department for any updates or changes.

B0945-A

REVISIONS			
REV	DESCRIPTION	DATE	APPROVED
1	ADDED NOTE E AND "MIN PIPE DIA" COL.	6/14/93	DH EATON
2	ADDED SIZE ON SIZE NOTE.	8/4/93	DH EATON
3	"B" DIM FOR 4" SIZE WAS 6.0	12/20/93	DH EATON
4	ADDED NOTE F "A" DIM'S CHANGED: 12" WAS 20.0, 16" WAS 28.0, 20" WAS 32.0, 24" WAS 36.0 AND 36" WAS 48.0 "D" DIM'S FOR FLG SIZES 10" – 24" WERE 1/2" OVER FLG SIZE. ADDED 18" SIZE.	7/26/07	SAM HILL
5	ADDED NOTE G	11/06/07	SAM HILL
6	CHANGED DIMENSION VARIABLE	1/24/11	PNN

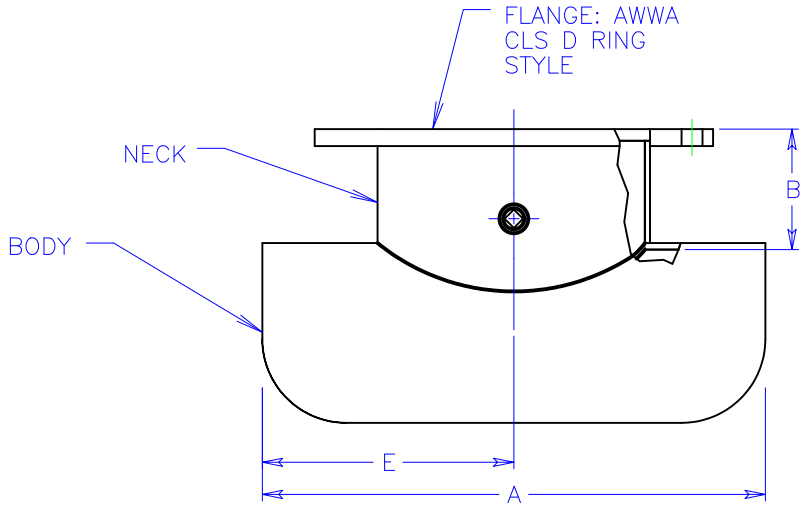

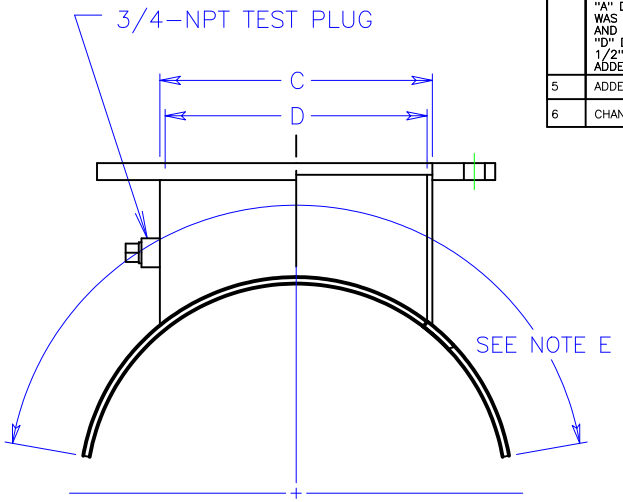

FLG SIZE	DIMENSIONS A	E	B	D*	C*	MIN PIPE DIA.
4"	9.0	4.5	5.18	4.73	5.03	6.00
6"	12.0	6.0	5.18	6.73	7.03	8.00
8"	16.0	8.0	5.18	8.73	9.03	10.00
10"	20.0	10.0	5.50	10.73	11.03	12.00
12"	22.0	11.0	5.75	12.73	13.03	14.00
14"	24.0	12.0	6.00	14.73	15.03	16.00
16"	29.0	14.5	6.00	16.73	17.03	20.00
18"	32.0	16.0	6.00	18.73	19.03	22.00
20"	35.0	17.5	6.00	20.73	21.03	24.00
24"	42.0	21.0	6.00	24.73	25.03	36.00
36"	62.0	31.0	6.00	36.25	37.03	42.00

1

*FLANGE DIMENSIONS MUST BE VERIFED BY CUSTOMER FOR FLANGE SIZES LARGER THAN 12".
FOR SMALLER DIAMETERS, CONSULT YOUR REPRESENTATIVE.

NOTE:
A. ALL MATERIAL ASTM A36 OR EQUAL.
B. COATING PER CUSTOMER ORDER.
C. MAX WORKING PRESSURE 175 PSI FOR FLANGE SIZES 12" AND SMALLER; 150 PSI FOR 14" AND LARGER.
D. DIMENSIONS SHOWN ARE SUITABLE FOR THE FOLLOWING CONDITIONS:
1. PIPE WALL: 0.25.
2. PIPE YIELD STRENGTH: 36,000 PSI.
3. TEMPERATURE LESS THAN 150° F.
WHERE OTHER CONDITIONS APPLY, CONSULT YOUR REPRESENTATIVE.
E. BODY EDGE WIDTH IN CIRCUMFERENTIAL DIRECTION WILL BE EQUAL TO DIMENSION A SAVE FOR SIZE ON SIZE TAPPING SLEEVES. BACK HALVES AVAILABLE ON REQUEST. 2
F. A AND B DIMESNIONS MAY VARY WITH SLEEVE SIZE.
G. SIZE ON SIZE SLEEVES ARE PROVIDED WITH A BACK HALF TO COMPLETE A FULL 360 DEGREE WRAP PER CONDITIONS IN NOTE D.

THIS DRAWING CONTAINS CONFIDENTIAL PROPRIETARY INFORMATION AND IS THE PROPERTY OF ROMAC IND INC. IT IS TO BE USED ONLY FOR THE PURPOSE FOR WHICH IT IS SUBMITTED AND SHALL NOT HAVE IT'S INFORMATION DISCLOSED OR REPRODUCED IN WHOLE OR IN PART FOR ANY PURPOSE WITHOUT PRIOR WRITTEN PERMISSION OF ROMAC IND INC.

UNLESS OTHERWISE SPECIFIED
DIMENSIONS ARE IN INCHES
TOLERANCES ARE ON:
2 PL DECIMALS +/-
3 PL DECIMALS +/-
ANGLES +/-
FRACTIONS +/-

SIGNATURES DATE
DRWN
CHECKED

ROMAC IND. INC.,
SEATTLE WA

TITLE
FTS445 WELD-ON TAPPING SLEEVES

SIZE A
DWG. NO. B0945-A
REV. NO. 6
SCALE NTS
SHEET 1 OF 1

ROMAC INDUSTRIES, INC.
1-800-426-9341
www.romac.com

MADE IN U.S.A

"FTS445" Steel Fabricated Tapping Sleeve

Material Specifications

Body and Outlet Nozzle: Carbon steel, A-36 or equal. Also available with type 304 stainless steel (style STS445)

Flange: Carbon steel, A-36 or equal. AWWA Class "D" plate flange, ANSI CLS 150 drilling, proper recessing for tapping valves. Will accommodate tapping flanges per MSS SP-60.

Test Plug: 3/4" NPT type 304 stainless steel test plug.

Coatings: Romac shopcoat for corrosion protection in transit. Other coatings available upon request.

Fabricated Tapping Sleeve for Weld-on Outlets

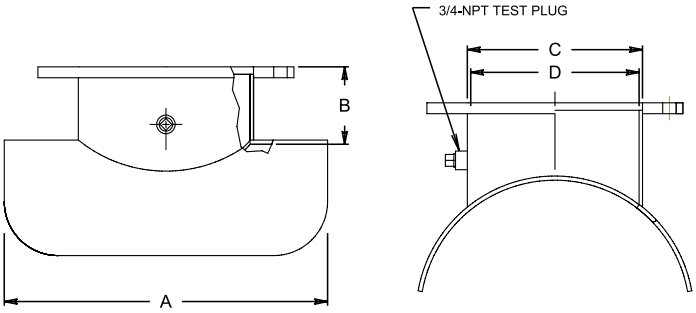

FLANGE SIZE	DIMENSIONS				MIN. PIPE DIAMETER
	A	B	C	D	
4"	9.0	5.18	5.03	4.73	6.00
6"	12.0	5.18	7.03	6.73	8.00
8"	16.0	5.18	9.03	8.73	10.00
10"	20.0	5.50	11.03	10.73	12.00
12"	22.0	5.75	13.03	12.73	14.00
14" *	24.0	6.00	15.03	14.73	16.00
16" *	29.0	6.00	17.03	16.73	20.00
18" *	32.0	6.00	19.03	18.73	22.00
20" *	35.0	6.00	21.03	20.73	24.00
24" *	42.0	6.63	25.03	24.73	36.00

Sleeves designed for a minimum pipe wall thickness of 0.25" and a minumum pipe material yield strength of 36 ksi will be collar style.

Size on size sleeves, and sleeves for thinner or lower strength pipe will require full wrap style sleeve (see illustration below).

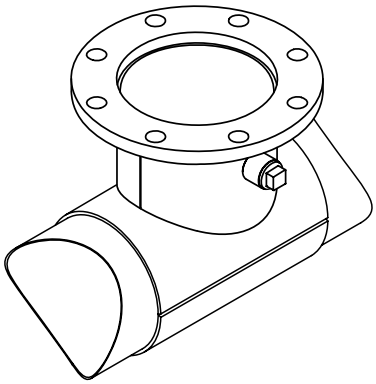

* Please specify tapping valve manufacturer, and flange dimensions for flange sizes larger than 12 inches.

Larger sizes and outlets available.

All prices POA

No Cancel, No Return Item.

ROMAC INDUSTRIES, INC.

INSTALLATION INSTRUCTIONS

Read installation instructions first before installing. Check parts to ensure that no damage has occurred during transit and that no parts are missing. Also check the diameter of the pipe and the range marked on the tapping sleeve to ensure you have the proper size.

FTS 445 Weld-On Tapping Sleeve

Step 1 • Clean the pipe surface where the sleeve is to be welded to the pipe. Remove all loose scale, rust, paint, or other contaminants from the weld area.

Step 2 • Care should be taken in welding the tapping sleeve to the pipe. Inside the tapping sleeve, a groove weld must be made around the inside of the neck where the neck intersects the pipe. If the tapping sleeve is epoxy coated, grind off epoxy where the weld is to be made on the I.D. of the neck. The weld must be 0.19" thick.

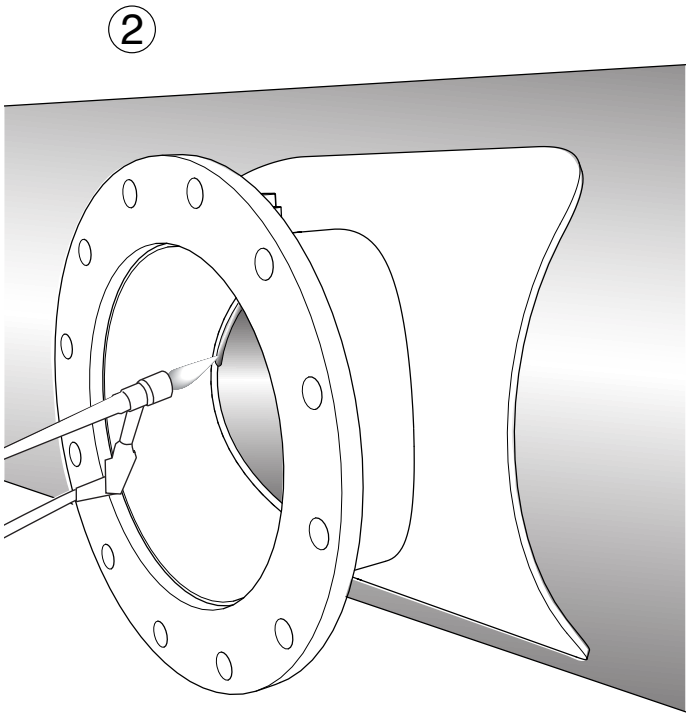

Weld
0.19" thick

Step 3 • After completion of the weld inside the neck, place a fillet weld around the outside of the tapping sleeve. This weld must be equal in leg length to the thickness of the pipe or the tapping sleeve body, whichever is less.

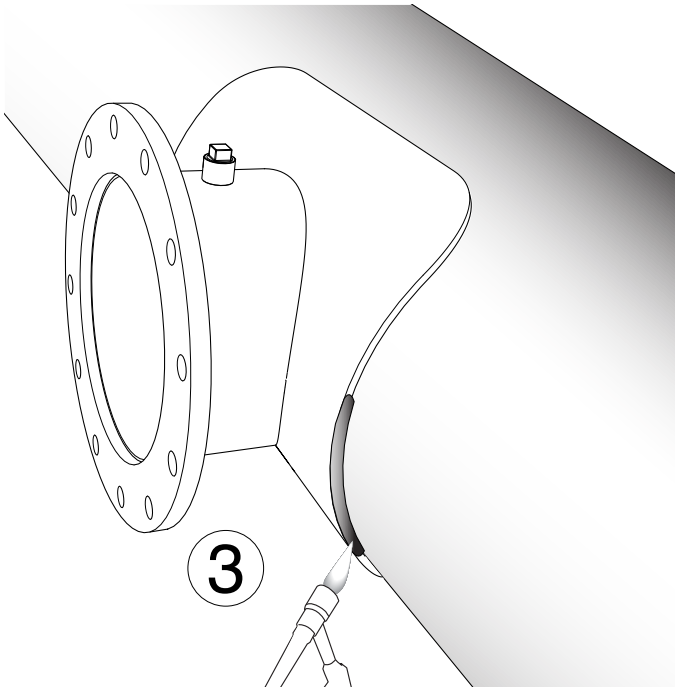

Fillet weld
Leg length equal to thickness of pipe or tapping sleeve body, whichever is less

Step 4 • Pressure test the weldment to be certain there are no leaks. Remove test plug and pressure test assembly to determine a tight joint. Test at pressure up to 1.25 times flange rating. AWWA Class D flanges, sizes 4-12 inch, maximum working pressure is 175 psi and a maximum test pressure of 220 psi. For flange sizes 14 inch and larger the maximum working pressure is 150 psi and the maximum test pressure is 188 psi.

Step 5 • After pressure test of the tapping sleeve is completed, proceed with the tapping operation.

Document #30-9-FTS445-0006 09.21.2011

21919 20th Avenue SE • Suite 100 • Bothell, WA 98021 • Phone (425) 951-6200 • 1-800-426-9341 • Fax (425) 951-6201

ROMAC INDUSTRIES, INC.

INSTALLATION INSTRUCTIONS

Style FTS 445

Fabricated Steel Tapping Sleeve

PRECAUTIONS

1. Check diameter of pipe to make sure you are using the correctly sized sleeve.
2. Always pressure test for leaks before tapping pipe.
3. Backfill and compact carefully around sleeve.
4. For personal safety reasons, do not use a compressible fluid (such as air) to check for water tightness.

NOTE: Tapping sleeves are designed for sealing purposes only, not structural support or restraint.

21919 20th Avenue SE • Suite 100 • Bothell, WA 98021 • Phone (425) 951-6200 • 1-800-426-9341 • Fax (425) 951-6201

EXHIBIT 'A'

CITY OF PRESCOTT
COMMUNITY DEVELOPMENT DEPARTMENT
BUILDING SAFETY DIVISION

PLOT PLAN SKETCH

Building Permit #: Job Address: 712 1st ST

Scale: 1" = 30' Assessor's Parcel Number: 113-02-046 Meter Number: N/A

Approved by: City of Prescott Building Division _____ Approved by: City of Prescott Engineering _____

1. It is the responsibility of the owner or contractor to field verify ALL UTILITY MAINS prior to construction.
2. Any improvement in City right-of-way requires permit issued by City Engineering Department per Ordinance #1338.
3. No structure shall encroach onto any easement or right-of-way. Driveway entrance may require dip section or minimum 12 inch corrugated metal pipe.
4. DO NOT ALTER SIDEWALK. SIDEWALK MUST MEET AMERICANS WITH DISABILITIES ACT (ADA) STANDARDS.
5. All mailbox installations must be to City of Prescott standard detail 1-08. Any deviation must be specially permitted by the Engineering Department.
6. Approval of the Planning & Zoning Department is subject to all other easements, encumbrances, etc. or restriction which may apply to said property by virtue of any City Ordinances and/or state law and deed restrictions. The City takes no responsibility for said restrictions or requirements and the burden to comply with such restrictions lies solely with the property owner and/or applicant.

I, _____, the owner's agent or the owner of record, for the structure located at: _____.

By signing this document I agree to the proposed rerouting for my water service from the building to the new main as shown. I also understand & agree to the installation of a sewer backflow device as shown.

_____ _____ _____

Owner Name **Owner Signature** **Date**

SP-# 1

EXHIBIT 'A'

CITY OF PRESCOTT
COMMUNITY DEVELOPMENT DEPARTMENT
BUILDING SAFETY DIVISION

PLOT PLAN SKETCH

Building Permit #: Job Address: 825 Miller Valley Rd

Scale: 1" = 60' Assessor's Parcel Number: 113-06-001 & 002 Meter Number: 2029-1279

Approved by: City of Prescott Building Division _____ Approved by: City of Prescott Engineering _____

1. It is the responsibility of the owner or contractor to field verify ALL UTILITY MAINS prior to construction.
2. Any improvement in City right-of-way requires permit issued by City Engineering Department per Ordinance #1338.
3. No structure shall encroach onto any easement or right-of-way. Driveway entrance may require dip section or minimum 12 inch corrugated metal pipe.
4. DO NOT ALTER SIDEWALK. SIDEWALK MUST MEET AMERICANS WITH DISABILITIES ACT (ADA) STANDARDS.
5. All mailbox installations must be to City of Prescott standard detail 1-08. Any deviation must be specially permitted by the Engineering Department.
6. Approval of the Planning & Zoning Department is subject to all other easements, encumbrances, etc. or restriction which may apply to said property by virtue of any City Ordinances and/or state law and deed restrictions. The City takes no responsibility for said restrictions or requirements and the burden to comply with such restrictions lies solely with the property owner and/or applicant.

I, _____, the owner's agent or the owner of record, for the structure located at: _____.

By signing this document I agree to the proposed rerouting for my water service from the building to the new main as shown. I also understand & agree to the installation of a sewer backflow device as shown.

Owner Name	Owner Signature	Date

SP-# 2

EXHIBIT 'A'

CITY OF PRESCOTT
COMMUNITY DEVELOPMENT DEPARTMENT
BUILDING SAFETY DIVISION

PLOT PLAN SKETCH

Building Permit #: Job Address: 826 N WALNUT ST

Scale: 1" = 30' Assessor's Parcel Number: 113-06-003 & 004 Meter Number: 1533-2116

Approved by: City of Prescott Building Division _____ Approved by: City of Prescott Engineering _____

1. It is the responsibility of the owner or contractor to field verify ALL UTILITY MAINS prior to construction.
2. Any improvement in City right-of-way requires permit issued by City Engineering Department per Ordinance #1338.
3. No structure shall encroach onto any easement or right-of-way. Driveway entrance may require dip section or minimum 12 inch corrugated metal pipe.
4. DO NOT ALTER SIDEWALK. SIDEWALK MUST MEET AMERICANS WITH DISABILITIES ACT (ADA) STANDARDS.
5. All mailbox installations must be to City of Prescott standard detail 1-08. Any deviation must be specially permitted by the Engineering Department.
6. Approval of the Planning & Zoning Department is subject to all other easements, encumbrances, etc. or restriction which may apply to said property by virtue of any City Ordinances and/or state law and deed restrictions. The City takes no responsibility for said restrictions or requirements and the burden to comply with such restrictions lies solely with the property owner and/or applicant.

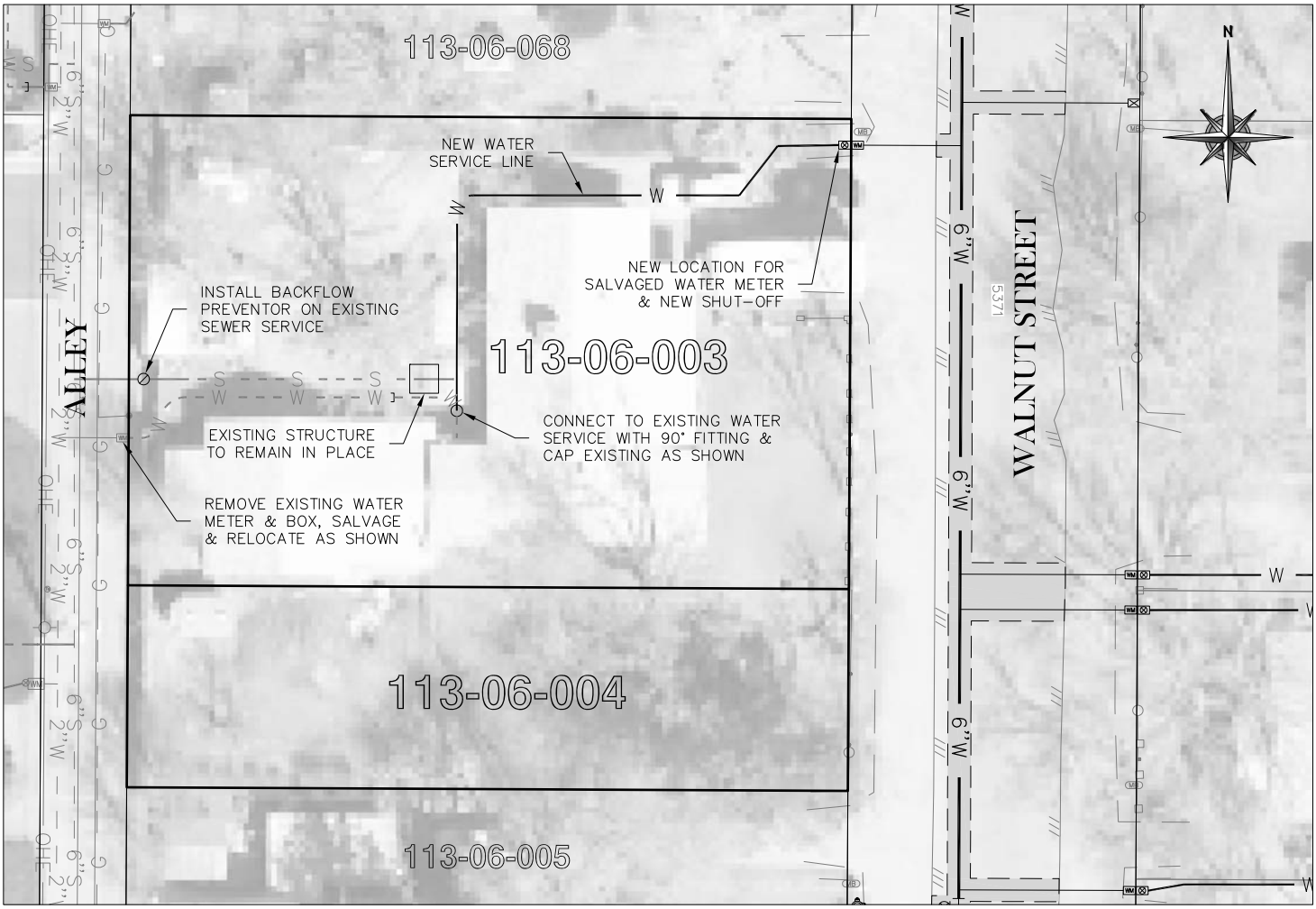

I, _____, the owner's agent or the owner of record, for the structure located at: _____.

By signing this document I agree to the proposed rerouting for my water service from the building to the new main as shown. I also understand & agree to the installation of a sewer backflow device as shown.

_____ _____ _____

Owner Name **Owner Signature** **Date**

SP-# 3

EXHIBIT 'A'

CITY OF PRESCOTT
COMMUNITY DEVELOPMENT DEPARTMENT
BUILDING SAFETY DIVISION

PLOT PLAN SKETCH

Building Permit #: Job Address: 820 N WALNUT ST

Scale: 1" = 30' Assessor's Parcel Number: 113-06-005 Meter Number: 1533-2110

Approved by: City of Prescott Building Division _____ Approved by: City of Prescott Engineering _____

1. It is the responsibility of the owner or contractor to field verify ALL UTILITY MAINS prior to construction.
2. Any improvement in City right-of-way requires permit issued by City Engineering Department per Ordinance #1338.
3. No structure shall encroach onto any easement or right-of-way. Driveway entrance may require dip section or minimum 12 inch corrugated metal pipe.
4. DO NOT ALTER SIDEWALK. SIDEWALK MUST MEET AMERICANS WITH DISABILITIES ACT (ADA) STANDARDS.
5. All mailbox installations must be to City of Prescott standard detail 1-08. Any deviation must be specially permitted by the Engineering Department.
6. Approval of the Planning & Zoning Department is subject to all other easements, encumbrances, etc. or restriction which may apply to said property by virtue of any City Ordinances and/or state law and deed restrictions. The City takes no responsibility for said restrictions or requirements and the burden to comply with such restrictions lies solely with the property owner and/or applicant.

I, _____, the owner's agent or the owner of record, for the structure located at: _____.

By signing this document I agree to the proposed rerouting for my water service from the building to the new main as shown. I also understand & agree to the installation of a sewer backflow device as shown.

_____ _____ _____

Owner Name **Owner Signature** **Date**

SP-# 4

EXHIBIT 'A'

CITY OF PRESCOTT
COMMUNITY DEVELOPMENT DEPARTMENT
BUILDING SAFETY DIVISION

PLOT PLAN SKETCH

Building Permit #: Job Address: 818 N WALNUT ST

Scale: 1" = 30' Assessor's Parcel Number: 113-06-006 Meter Number: 1728-6885

Approved by: City of Prescott Building Division _____ Approved by: City of Prescott Engineering _____

1. It is the responsibility of the owner or contractor to field verify ALL UTILITY MAINS prior to construction.
2. Any improvement in City right-of-way requires permit issued by City Engineering Department per Ordinance #1338.
3. No structure shall encroach onto any easement or right-of-way. Driveway entrance may require dip section or minimum 12 inch corrugated metal pipe.
4. DO NOT ALTER SIDEWALK. SIDEWALK MUST MEET AMERICANS WITH DISABILITIES ACT (ADA) STANDARDS.
5. All mailbox installations must be to City of Prescott standard detail 1-08. Any deviation must be specially permitted by the Engineering Department.
6. Approval of the Planning & Zoning Department is subject to all other easements, encumbrances, etc. or restriction which may apply to said property by virtue of any City Ordinances and/or state law and deed restrictions. The City takes no responsibility for said restrictions or requirements and the burden to comply with such restrictions lies solely with the property owner and/or applicant.

I, _____, the owner's agent or the owner of record, for the structure located at: _____.

By signing this document I agree to the proposed rerouting for my water service from the building to the new main as shown. I also understand & agree to the installation of a sewer backflow device as shown.

_____ _____ _____

Owner Name **Owner Signature** **Date**

SP-# 5

EXHIBIT 'A'

CITY OF PRESCOTT
COMMUNITY DEVELOPMENT DEPARTMENT
BUILDING SAFETY DIVISION

PLOT PLAN SKETCH

Building Permit #: Job Address: 805 Miller Valley Rd

Scale: 1" = 50' Assessor's Parcel Number: 113-06-007 Meter Number: 2019-1030

Approved by: City of Prescott Building Division _____ Approved by: City of Prescott Engineering _____

1. It is the responsibility of the owner or contractor to field verify ALL UTILITY MAINS prior to construction.
2. Any improvement in City right-of-way requires permit issued by City Engineering Department per Ordinance #1338.
3. No structure shall encroach onto any easement or right-of-way. Driveway entrance may require dip section or minimum 12 inch corrugated metal pipe.
4. DO NOT ALTER SIDEWALK. SIDEWALK MUST MEET AMERICANS WITH DISABILITIES ACT (ADA) STANDARDS.
5. All mailbox installations must be to City of Prescott standard detail 1-08. Any deviation must be specially permitted by the Engineering Department.
6. Approval of the Planning & Zoning Department is subject to all other easements, encumbrances, etc. or restriction which may apply to said property by virtue of any City Ordinances and/or state law and deed restrictions. The City takes no responsibility for said restrictions or requirements and the burden to comply with such restrictions lies solely with the property owner and/or applicant.

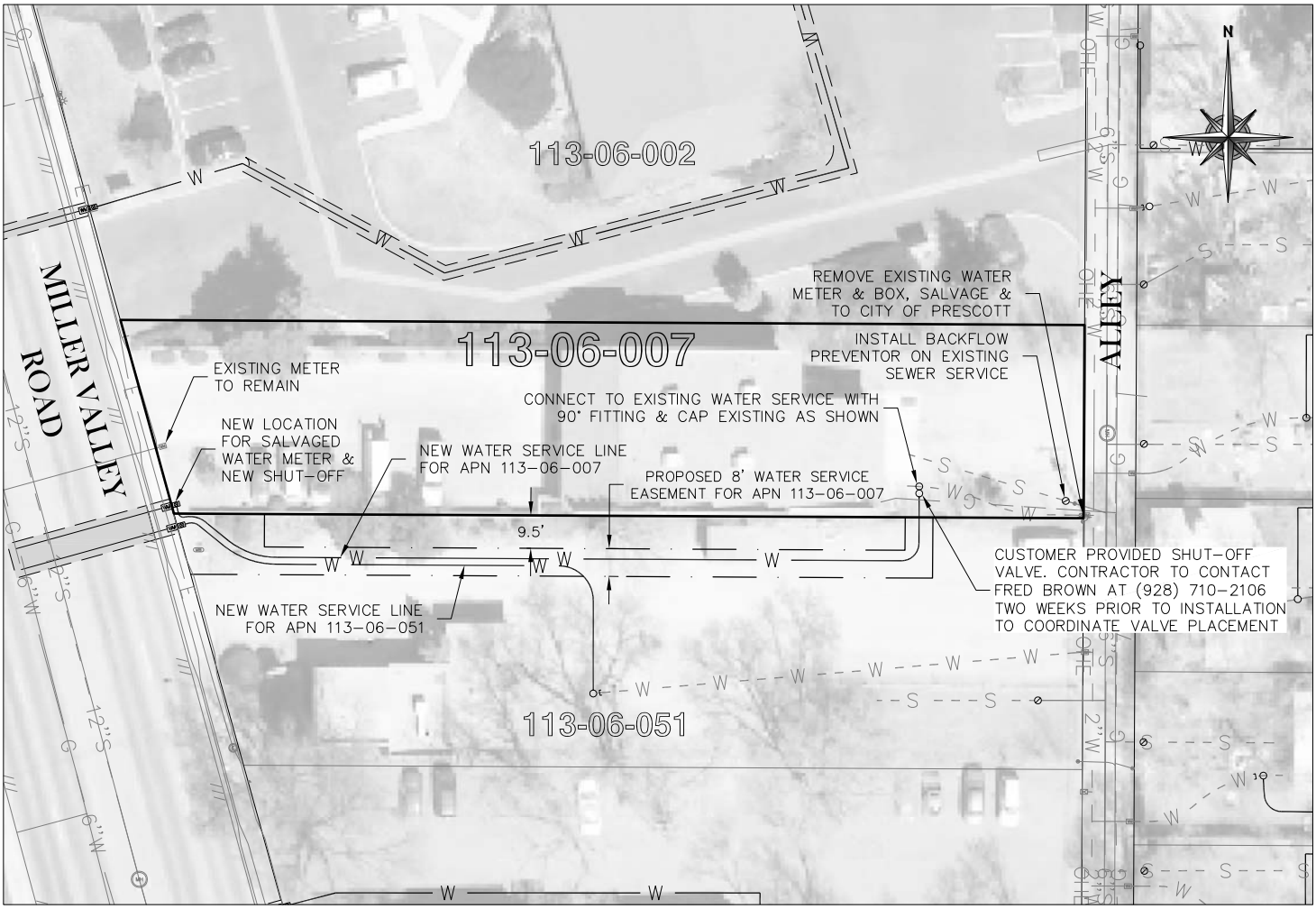

I, _____, the owner's agent or the owner of record, for the structure located at: _____.

By signing this document I agree to the proposed rerouting for my water service from the building to the new main as shown. I also understand & agree to the installation of a sewer backflow device as shown.

Owner Name	Owner Signature	Date

SP-# 6

EXHIBIT 'A'

CITY OF PRESCOTT
COMMUNITY DEVELOPMENT DEPARTMENT
BUILDING SAFETY DIVISION

PLOT PLAN SKETCH

Building Permit #: Job Address: 814 N WALNUT ST

Scale: 1" = 30' Assessor's Parcel Number: 113-06-008 Meter Number: 2019-0817

Approved by: City of Prescott Building Division _____ Approved by: City of Prescott Engineering _____

1. It is the responsibility of the owner or contractor to field verify ALL UTILITY MAINS prior to construction.
2. Any improvement in City right-of-way requires permit issued by City Engineering Department per Ordinance #1338.
3. No structure shall encroach onto any easement or right-of-way. Driveway entrance may require dip section or minimum 12 inch corrugated metal pipe.
4. DO NOT ALTER SIDEWALK. SIDEWALK MUST MEET AMERICANS WITH DISABILITIES ACT (ADA) STANDARDS.
5. All mailbox installations must be to City of Prescott standard detail 1-08. Any deviation must be specially permitted by the Engineering Department.
6. Approval of the Planning & Zoning Department is subject to all other easements, encumbrances, etc. or restriction which may apply to said property by virtue of any City Ordinances and/or state law and deed restrictions. The City takes no responsibility for said restrictions or requirements and the burden to comply with such restrictions lies solely with the property owner and/or applicant.

I, _____, the owner's agent or the owner of record, for the structure located at: _____.

By signing this document I agree to the proposed rerouting for my water service from the building to the new main as shown. I also understand & agree to the installation of a sewer backflow device as shown.

Owner Name _____ **Owner Signature** _____ **Date** _____

SP-# 7

EXHIBIT 'A'

CITY OF PRESCOTT
COMMUNITY DEVELOPMENT DEPARTMENT
BUILDING SAFETY DIVISION

PLOT PLAN SKETCH

Building Permit #: Job Address: 810 N WALNUT ST

Scale: 1" = 30' Assessor's Parcel Number: 113-06-009 Meter Number: 2054-5944

Approved by: City of Prescott Building Division _____ Approved by: City of Prescott Engineering _____

1. It is the responsibility of the owner or contractor to field verify ALL UTILITY MAINS prior to construction.
2. Any improvement in City right-of-way requires permit issued by City Engineering Department per Ordinance #1338.
3. No structure shall encroach onto any easement or right-of-way. Driveway entrance may require dip section or minimum 12 inch corrugated metal pipe.
4. DO NOT ALTER SIDEWALK. SIDEWALK MUST MEET AMERICANS WITH DISABILITIES ACT (ADA) STANDARDS.
5. All mailbox installations must be to City of Prescott standard detail 1-08. Any deviation must be specially permitted by the Engineering Department.
6. Approval of the Planning & Zoning Department is subject to all other easements, encumbrances, etc. or restriction which may apply to said property by virtue of any City Ordinances and/or state law and deed restrictions. The City takes no responsibility for said restrictions or requirements and the burden to comply with such restrictions lies solely with the property owner and/or applicant.

I, _____, the owner's agent or the owner of record, for the structure located at: _____.

By signing this document I agree to the proposed rerouting for my water service from the building to the new main as shown. I also understand & agree to the installation of a sewer backflow device as shown.

SIGNED COPY ON FILE AT
GRANITE BASIN ENGINEERING, INC.

Owner Name **Owner Signature** **Date**

SP-# 8

EXHIBIT 'A'

CITY OF PRESCOTT
COMMUNITY DEVELOPMENT DEPARTMENT
BUILDING SAFETY DIVISION

PLOT PLAN SKETCH

Building Permit #: Job Address: 806 N WALNUT ST

Scale: 1" = 30' Assessor's Parcel Number: 113-06-010A Meter Number: 2019-1025

Approved by: City of Prescott Building Division _____ Approved by: City of Prescott Engineering _____

1. It is the responsibility of the owner or contractor to field verify ALL UTILITY MAINS prior to construction.
2. Any improvement in City right-of-way requires permit issued by City Engineering Department per Ordinance #1338.
3. No structure shall encroach onto any easement or right-of-way. Driveway entrance may require dip section or minimum 12 inch corrugated metal pipe.
4. DO NOT ALTER SIDEWALK. SIDEWALK MUST MEET AMERICANS WITH DISABILITIES ACT (ADA) STANDARDS.
5. All mailbox installations must be to City of Prescott standard detail 1-08. Any deviation must be specially permitted by the Engineering Department.
6. Approval of the Planning & Zoning Department is subject to all other easements, encumbrances, etc. or restriction which may apply to said property by virtue of any City Ordinances and/or state law and deed restrictions. The City takes no responsibility for said restrictions or requirements and the burden to comply with such restrictions lies solely with the property owner and/or applicant.

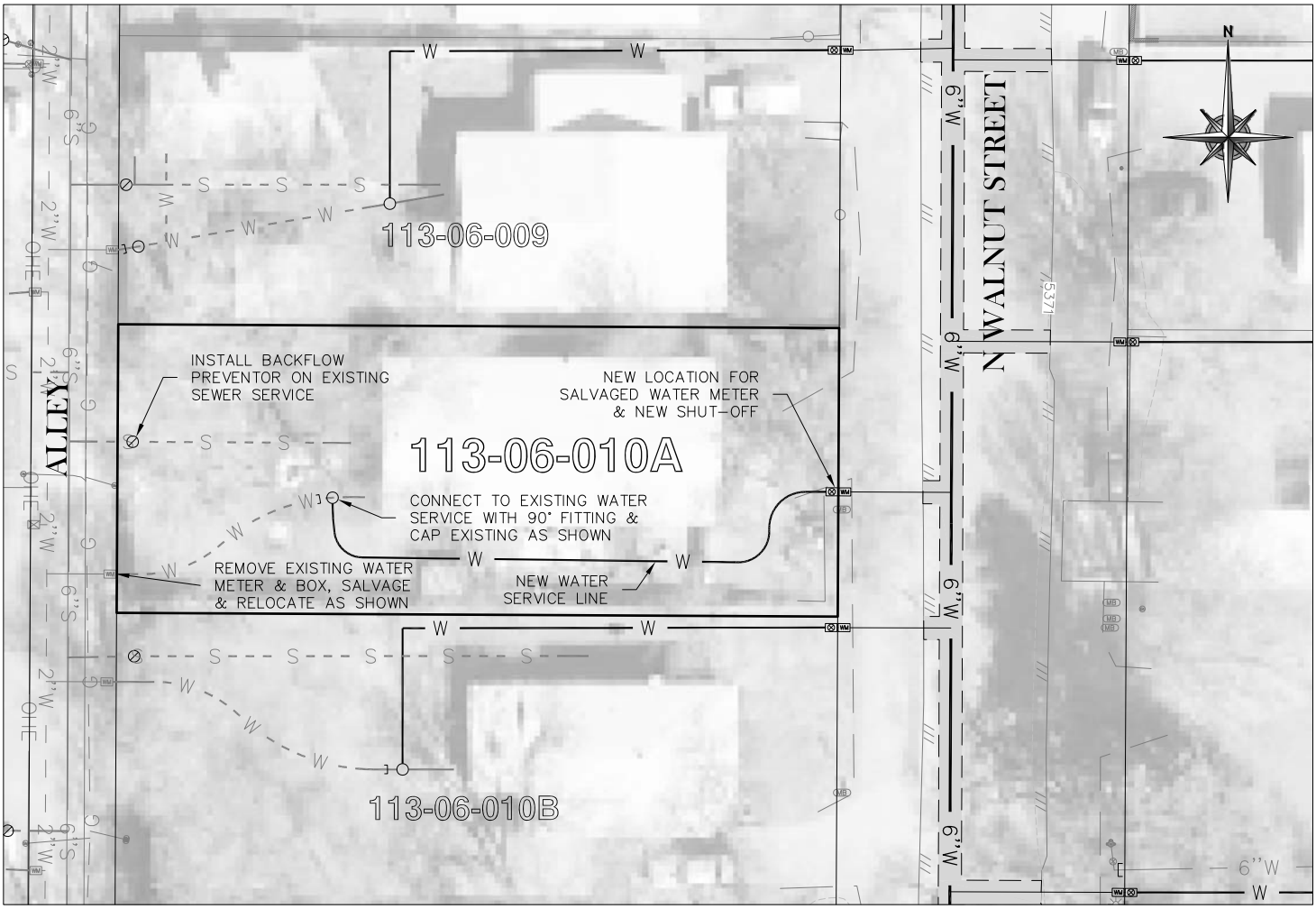

I, _____, the owner's agent or the owner of record, for the structure located at: _____.

By signing this document I agree to the proposed rerouting for my water service from the building to the new main as shown. I also understand & agree to the installation of a sewer backflow device as shown.

Owner Name _____ **Owner Signature** _____ **Date** _____

SP-# 9

EXHIBIT 'A'

CITY OF PRESCOTT
COMMUNITY DEVELOPMENT DEPARTMENT
BUILDING SAFETY DIVISION

PLOT PLAN SKETCH

Building Permit #: Job Address: 802 N WALNUT ST

Scale: 1" = 30' Assessor's Parcel Number: 113-06-010B Meter Number: 2019-0816

Approved by: City of Prescott Building Division _____ Approved by: City of Prescott Engineering _____

1. It is the responsibility of the owner or contractor to field verify ALL UTILITY MAINS prior to construction.
2. Any improvement in City right-of-way requires permit issued by City Engineering Department per Ordinance #1338.
3. No structure shall encroach onto any easement or right-of-way. Driveway entrance may require dip section or minimum 12 inch corrugated metal pipe.
4. DO NOT ALTER SIDEWALK. SIDEWALK MUST MEET AMERICANS WITH DISABILITIES ACT (ADA) STANDARDS.
5. All mailbox installations must be to City of Prescott standard detail 1-08. Any deviation must be specially permitted by the Engineering Department.
6. Approval of the Planning & Zoning Department is subject to all other easements, encumbrances, etc. or restriction which may apply to said property by virtue of any City Ordinances and/or state law and deed restrictions. The City takes no responsibility for said restrictions or requirements and the burden to comply with such restrictions lies solely with the property owner and/or applicant.

I, _____, the owner's agent or the owner of record, for the structure located at: _____.

By signing this document I agree to the proposed rerouting for my water service from the building to the new main as shown. I also understand & agree to the installation of a sewer backflow device as shown.

_____ _____ _____

Owner Name **Owner Signature** **Date**

SP-#10

EXHIBIT 'A'

CITY OF PRESCOTT
COMMUNITY DEVELOPMENT DEPARTMENT
BUILDING SAFETY DIVISION

PLOT PLAN SKETCH

Building Permit #: Job Address: 831 N WALNUT ST

Scale: 1" = 30' Assessor's Parcel Number: 113-06-011 Meter Number: 1531-3271

Approved by: City of Prescott Building Division _____ Approved by: City of Prescott Engineering _____

1. It is the responsibility of the owner or contractor to field verify ALL UTILITY MAINS prior to construction.
2. Any improvement in City right-of-way requires permit issued by City Engineering Department per Ordinance #1338.
3. No structure shall encroach onto any easement or right-of-way. Driveway entrance may require dip section or minimum 12 inch corrugated metal pipe.
4. DO NOT ALTER SIDEWALK. SIDEWALK MUST MEET AMERICANS WITH DISABILITIES ACT (ADA) STANDARDS.
5. All mailbox installations must be to City of Prescott standard detail 1-08. Any deviation must be specially permitted by the Engineering Department.
6. Approval of the Planning & Zoning Department is subject to all other easements, encumbrances, etc. or restriction which may apply to said property by virtue of any City Ordinances and/or state law and deed restrictions. The City takes no responsibility for said restrictions or requirements and the burden to comply with such restrictions lies solely with the property owner and/or applicant.

I, _____, the owner's agent or the owner of record, for the structure located at: _____.

By signing this document I agree to the proposed rerouting for my water service from the building to the new main as shown. I also understand & agree to the installation of a sewer backflow device as shown.

Owner Name _____ **Owner Signature** _____ **Date** _____

SP-#11

EXHIBIT 'A'

CITY OF PRESCOTT
COMMUNITY DEVELOPMENT DEPARTMENT
BUILDING SAFETY DIVISION

PLOT PLAN SKETCH

Building Permit #: Job Address: 826 DIVISION ST

Scale: 1" = 30' Assessor's Parcel Number: 113-06-012 Meter Number: 1916-8408

Approved by: City of Prescott Building Division _____ Approved by: City of Prescott Engineering _____

1. It is the responsibility of the owner or contractor to field verify ALL UTILITY MAINS prior to construction.
2. Any improvement in City right-of-way requires permit issued by City Engineering Department per Ordinance #1338.
3. No structure shall encroach onto any easement or right-of-way. Driveway entrance may require dip section or minimum 12 inch corrugated metal pipe.
4. DO NOT ALTER SIDEWALK. SIDEWALK MUST MEET AMERICANS WITH DISABILITIES ACT (ADA) STANDARDS.
5. All mailbox installations must be to City of Prescott standard detail 1-08. Any deviation must be specially permitted by the Engineering Department.
6. Approval of the Planning & Zoning Department is subject to all other easements, encumbrances, etc. or restriction which may apply to said property by virtue of any City Ordinances and/or state law and deed restrictions. The City takes no responsibility for said restrictions or requirements and the burden to comply with such restrictions lies solely with the property owner and/or applicant.

I, _____, the owner's agent or the owner of record, for the structure located at: _____.

By signing this document I agree to the proposed rerouting for my water service from the building to the new main as shown. I also understand & agree to the installation of a sewer backflow device as shown.

Owner Name	Owner Signature	Date

SP-#12

EXHIBIT 'A'

CITY OF PRESCOTT
COMMUNITY DEVELOPMENT DEPARTMENT
BUILDING SAFETY DIVISION

PLOT PLAN SKETCH

Building Permit #: Job Address: 819 N WALNUT ST

Scale: 1" = 30' Assessor's Parcel Number: 113-06-013A Meter Number: 1531-3268

Approved by: City of Prescott Building Division _____ Approved by: City of Prescott Engineering _____

1. It is the responsibility of the owner or contractor to field verify ALL UTILITY MAINS prior to construction.
2. Any improvement in City right-of-way requires permit issued by City Engineering Department per Ordinance #1338.
3. No structure shall encroach onto any easement or right-of-way. Driveway entrance may require dip section or minimum 12 inch corrugated metal pipe.
4. DO NOT ALTER SIDEWALK. SIDEWALK MUST MEET AMERICANS WITH DISABILITIES ACT (ADA) STANDARDS.
5. All mailbox installations must be to City of Prescott standard detail 1-08. Any deviation must be specially permitted by the Engineering Department.
6. Approval of the Planning & Zoning Department is subject to all other easements, encumbrances, etc. or restriction which may apply to said property by virtue of any City Ordinances and/or state law and deed restrictions. The City takes no responsibility for said restrictions or requirements and the burden to comply with such restrictions lies solely with the property owner and/or applicant.

I, _____, the owner's agent or the owner of record, for the structure located at: _____.

By signing this document I agree to the proposed rerouting for my water service from the building to the new main as shown. I also understand & agree to the installation of a sewer backflow device as shown.

_____ _____ _____

Owner Name **Owner Signature** **Date**

SP-#13

EXHIBIT 'A'

CITY OF PRESCOTT
COMMUNITY DEVELOPMENT DEPARTMENT
BUILDING SAFETY DIVISION

PLOT PLAN SKETCH

Building Permit #: Job Address: 817 N WALNUT ST

Scale: 1" = 30' Assessor's Parcel Number: 113-06-013B Meter Number: 1533-2120

Approved by: City of Prescott Building Division _____ Approved by: City of Prescott Engineering _____

1. It is the responsibility of the owner or contractor to field verify ALL UTILITY MAINS prior to construction.
2. Any improvement in City right-of-way requires permit issued by City Engineering Department per Ordinance #1338.
3. No structure shall encroach onto any easement or right-of-way. Driveway entrance may require dip section or minimum 12 inch corrugated metal pipe.
4. DO NOT ALTER SIDEWALK. SIDEWALK MUST MEET AMERICANS WITH DISABILITIES ACT (ADA) STANDARDS.
5. All mailbox installations must be to City of Prescott standard detail 1-08. Any deviation must be specially permitted by the Engineering Department.
6. Approval of the Planning & Zoning Department is subject to all other easements, encumbrances, etc. or restriction which may apply to said property by virtue of any City Ordinances and/or state law and deed restrictions. The City takes no responsibility for said restrictions or requirements and the burden to comply with such restrictions lies solely with the property owner and/or applicant.

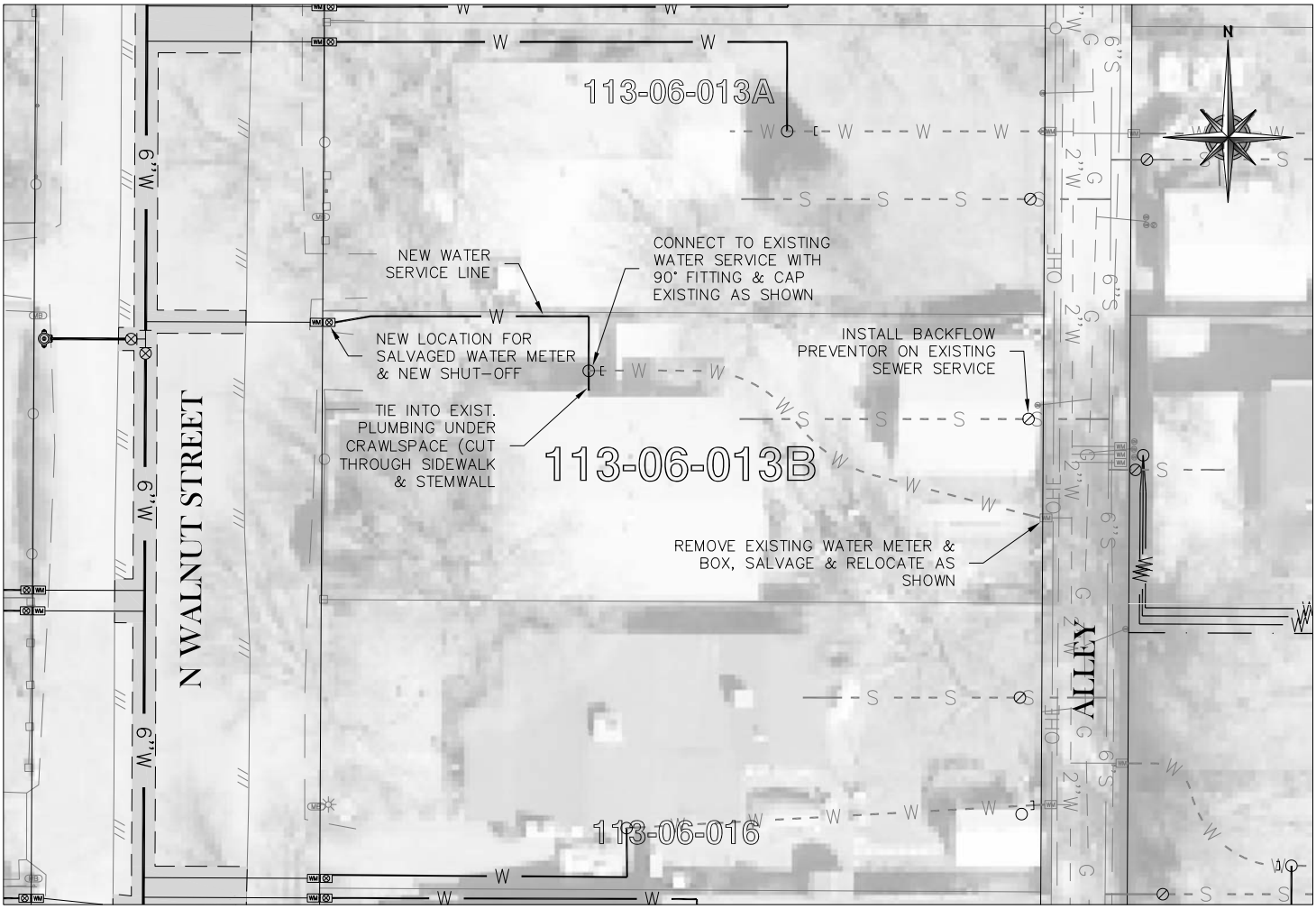

I, _____, the owner's agent or the owner of record, for the structure located at: _____.

By signing this document I agree to the proposed rerouting for my water service from the building to the new main as shown. I also understand & agree to the installation of a sewer backflow device as shown.

Owner Name	Owner Signature	Date

SP-#14

EXHIBIT 'A'

CITY OF PRESCOTT
COMMUNITY DEVELOPMENT DEPARTMENT
BUILDING SAFETY DIVISION

PLOT PLAN SKETCH

Building Permit #: Job Address: 824 1/2 DIVISION ST

Scale: 1" = 30' Assessor's Parcel Number: 113-06-014 Meter Number: 1728-6929

Approved by: City of Prescott Building Division _____ Approved by: City of Prescott Engineering _____

1. It is the responsibility of the owner or contractor to field verify ALL UTILITY MAINS prior to construction.
2. Any improvement in City right-of-way requires permit issued by City Engineering Department per Ordinance #1338.
3. No structure shall encroach onto any easement or right-of-way. Driveway entrance may require dip section or minimum 12 inch corrugated metal pipe.
4. DO NOT ALTER SIDEWALK. SIDEWALK MUST MEET AMERICANS WITH DISABILITIES ACT (ADA) STANDARDS.
5. All mailbox installations must be to City of Prescott standard detail 1-08. Any deviation must be specially permitted by the Engineering Department.
6. Approval of the Planning & Zoning Department is subject to all other easements, encumbrances, etc. or restriction which may apply to said property by virtue of any City Ordinances and/or state law and deed restrictions. The City takes no responsibility for said restrictions or requirements and the burden to comply with such restrictions lies solely with the property owner and/or applicant.

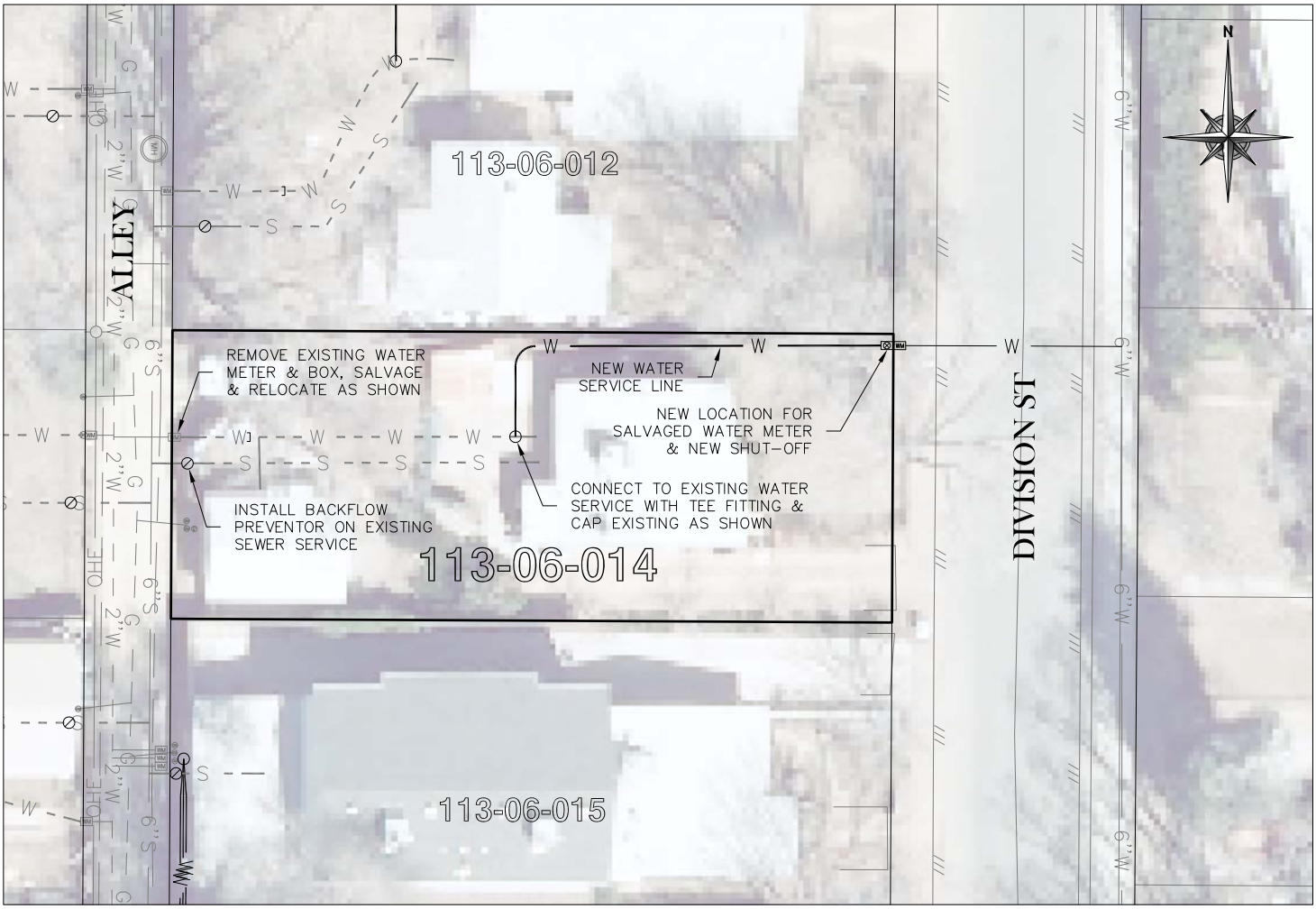

I, _____, the owner's agent or the owner of record, for the structure located at: _____.

By signing this document I agree to the proposed rerouting for my water service from the building to the new main as shown. I also understand & agree to the installation of a sewer backflow device as shown.

Owner Name	Owner Signature	Date

SP-#15

EXHIBIT 'A'

CITY OF PRESCOTT
COMMUNITY DEVELOPMENT DEPARTMENT
BUILDING SAFETY DIVISION

PLOT PLAN SKETCH

Building Permit #: Job Address: 818 DIVISION STREET

Scale: 1" = 30' Assessor's Parcel Number: 113-06-015 Meter Number: 1656-2331

Approved by: City of Prescott Building Division _____ Approved by: City of Prescott Engineering _____

1. It is the responsibility of the owner or contractor to field verify ALL UTILITY MAINS prior to construction.
2. Any improvement in City right-of-way requires permit issued by City Engineering Department per Ordinance #1338.
3. No structure shall encroach onto any easement or right-of-way. Driveway entrance may require dip section or minimum 12 inch corrugated metal pipe.
4. DO NOT ALTER SIDEWALK. SIDEWALK MUST MEET AMERICANS WITH DISABILITIES ACT (ADA) STANDARDS.
5. All mailbox installations must be to City of Prescott standard detail 1-08. Any deviation must be specially permitted by the Engineering Department.
6. Approval of the Planning & Zoning Department is subject to all other easements, encumbrances, etc. or restriction which may apply to said property by virtue of any City Ordinances and/or state law and deed restrictions. The City takes no responsibility for said restrictions or requirements and the burden to comply with such restrictions lies solely with the property owner and/or applicant.

I, _____, the owner's agent or the owner of record, for the structure located at: _____.

By signing this document I agree to the proposed rerouting for my water service from the building to the new main as shown. I also understand & agree to the installation of a sewer backflow device as shown.

Owner Name	Owner Signature	Date

SP-#16

EXHIBIT 'A'

CITY OF PRESCOTT
COMMUNITY DEVELOPMENT DEPARTMENT
BUILDING SAFETY DIVISION

PLOT PLAN SKETCH

Building Permit #: Job Address: 815 N WALNUT ST

Scale: 1" = 30' Assessor's Parcel Number: 113-06-016 Meter Number: 1531-3278

Approved by: City of Prescott Building Division _____ Approved by: City of Prescott Engineering _____

1. It is the responsibility of the owner or contractor to field verify ALL UTILITY MAINS prior to construction.
2. Any improvement in City right-of-way requires permit issued by City Engineering Department per Ordinance #1338.
3. No structure shall encroach onto any easement or right-of-way. Driveway entrance may require dip section or minimum 12 inch corrugated metal pipe.
4. DO NOT ALTER SIDEWALK. SIDEWALK MUST MEET AMERICANS WITH DISABILITIES ACT (ADA) STANDARDS.
5. All mailbox installations must be to City of Prescott standard detail 1-08. Any deviation must be specially permitted by the Engineering Department.
6. Approval of the Planning & Zoning Department is subject to all other easements, encumbrances, etc. or restriction which may apply to said property by virtue of any City Ordinances and/or state law and deed restrictions. The City takes no responsibility for said restrictions or requirements and the burden to comply with such restrictions lies solely with the property owner and/or applicant.

I, _____, the owner's agent or the owner of record, for the structure located at: _____.

By signing this document I agree to the proposed rerouting for my water service from the building to the new main as shown. I also understand & agree to the installation of a sewer backflow device as shown.

_____ _____ _____

Owner Name **Owner Signature** **Date**

SP-#17

EXHIBIT 'A'

CITY OF PRESCOTT
COMMUNITY DEVELOPMENT DEPARTMENT
BUILDING SAFETY DIVISION

PLOT PLAN SKETCH

Building Permit #: Job Address: 806 DIVISION ST

Scale: 1" = 30' Assessor's Parcel Number: 113-06-017 Meter Number: 1533-2117

Approved by: City of Prescott Building Division _____ Approved by: City of Prescott Engineering _____

1. It is the responsibility of the owner or contractor to field verify ALL UTILITY MAINS prior to construction.
2. Any improvement in City right-of-way requires permit issued by City Engineering Department per Ordinance #1338.
3. No structure shall encroach onto any easement or right-of-way. Driveway entrance may require dip section or minimum 12 inch corrugated metal pipe.
4. DO NOT ALTER SIDEWALK. SIDEWALK MUST MEET AMERICANS WITH DISABILITIES ACT (ADA) STANDARDS.
5. All mailbox installations must be to City of Prescott standard detail 1-08. Any deviation must be specially permitted by the Engineering Department.
6. Approval of the Planning & Zoning Department is subject to all other easements, encumbrances, etc. or restriction which may apply to said property by virtue of any City Ordinances and/or state law and deed restrictions. The City takes no responsibility for said restrictions or requirements and the burden to comply with such restrictions lies solely with the property owner and/or applicant.

I, _____, the owner's agent or the owner of record, for the structure located at: _____.

By signing this document I agree to the proposed rerouting for my water service from the building to the new main as shown. I also understand & agree to the installation of a sewer backflow device as shown.

Owner Name	Owner Signature	Date

SP-#18

EXHIBIT 'A'

CITY OF PRESCOTT
COMMUNITY DEVELOPMENT DEPARTMENT
BUILDING SAFETY DIVISION

PLOT PLAN SKETCH

Building Permit #: Job Address: 813 N WALNUT ST

Scale: 1" = 30' Assessor's Parcel Number: 113-06-018 Meter Number: 1531-3275

Approved by: City of Prescott Building Division _____ Approved by: City of Prescott Engineering _____

1. It is the responsibility of the owner or contractor to field verify ALL UTILITY MAINS prior to construction.
2. Any improvement in City right-of-way requires permit issued by City Engineering Department per Ordinance #1338.
3. No structure shall encroach onto any easement or right-of-way. Driveway entrance may require dip section or minimum 12 inch corrugated metal pipe.
4. DO NOT ALTER SIDEWALK. SIDEWALK MUST MEET AMERICANS WITH DISABILITIES ACT (ADA) STANDARDS.
5. All mailbox installations must be to City of Prescott standard detail 1-08. Any deviation must be specially permitted by the Engineering Department.
6. Approval of the Planning & Zoning Department is subject to all other easements, encumbrances, etc. or restriction which may apply to said property by virtue of any City Ordinances and/or state law and deed restrictions. The City takes no responsibility for said restrictions or requirements and the burden to comply with such restrictions lies solely with the property owner and/or applicant.

I, _____, the owner's agent or the owner of record, for the structure located at: _____.

By signing this document I agree to the proposed rerouting for my water service from the building to the new main as shown. I also understand & agree to the installation of a sewer backflow device as shown.

_____ _____ _____

Owner Name **Owner Signature** **Date**

SP-#19

EXHIBIT 'A'

CITY OF PRESCOTT
COMMUNITY DEVELOPMENT DEPARTMENT
BUILDING SAFETY DIVISION

PLOT PLAN SKETCH

Building Permit #: Job Address: 804 DIVISION ST

Scale: 1" = 30' Assessor's Parcel Number: 113-06-019 Meter Number: N/A

Approved by: City of Prescott Building Division _____ Approved by: City of Prescott Engineering _____

1. It is the responsibility of the owner or contractor to field verify ALL UTILITY MAINS prior to construction.
2. Any improvement in City right-of-way requires permit issued by City Engineering Department per Ordinance #1338.
3. No structure shall encroach onto any easement or right-of-way. Driveway entrance may require dip section or minimum 12 inch corrugated metal pipe.
4. DO NOT ALTER SIDEWALK. SIDEWALK MUST MEET AMERICANS WITH DISABILITIES ACT (ADA) STANDARDS.
5. All mailbox installations must be to City of Prescott standard detail 1-08. Any deviation must be specially permitted by the Engineering Department.
6. Approval of the Planning & Zoning Department is subject to all other easements, encumbrances, etc. or restriction which may apply to said property by virtue of any City Ordinances and/or state law and deed restrictions. The City takes no responsibility for said restrictions or requirements and the burden to comply with such restrictions lies solely with the property owner and/or applicant.

I, _____, the owner's agent or the owner of record, for the structure located at: _____.

By signing this document I agree to the proposed rerouting for my water service from the building to the new main as shown. I also understand & agree to the installation of a sewer backflow device as shown.

Owner Name **Owner Signature** **Date**

SP-#20

EXHIBIT 'A'

CITY OF PRESCOTT
COMMUNITY DEVELOPMENT DEPARTMENT
BUILDING SAFETY DIVISION

PLOT PLAN SKETCH

Building Permit #: Job Address: 809 N WALNUT ST

Scale: 1" = 30' Assessor's Parcel Number: 113-06-020 Meter Number: 1533-2118

Approved by: City of Prescott Building Division _____ Approved by: City of Prescott Engineering _____

1. It is the responsibility of the owner or contractor to field verify ALL UTILITY MAINS prior to construction.
2. Any improvement in City right-of-way requires permit issued by City Engineering Department per Ordinance #1338.
3. No structure shall encroach onto any easement or right-of-way. Driveway entrance may require dip section or minimum 12 inch corrugated metal pipe.
4. DO NOT ALTER SIDEWALK. SIDEWALK MUST MEET AMERICANS WITH DISABILITIES ACT (ADA) STANDARDS.
5. All mailbox installations must be to City of Prescott standard detail 1-08. Any deviation must be specially permitted by the Engineering Department.
6. Approval of the Planning & Zoning Department is subject to all other easements, encumbrances, etc. or restriction which may apply to said property by virtue of any City Ordinances and/or state law and deed restrictions. The City takes no responsibility for said restrictions or requirements and the burden to comply with such restrictions lies solely with the property owner and/or applicant.

I, _____, the owner's agent or the owner of record, for the structure located at: _____.

By signing this document I agree to the proposed rerouting for my water service from the building to the new main as shown. I also understand & agree to the installation of a sewer backflow device as shown.

Owner Name _____ **Owner Signature** _____ **Date** _____

SP-#21

EXHIBIT 'A'

CITY OF PRESCOTT
COMMUNITY DEVELOPMENT DEPARTMENT
BUILDING SAFETY DIVISION

PLOT PLAN SKETCH

Building Permit #: Job Address: 801 N WALNUT ST

Scale: 1" = 30' Assessor's Parcel Number: 113-06-021A Meter Number: 1533-2126 & 1656-1783

Approved by: City of Prescott Building Division _____ Approved by: City of Prescott Engineering _____

1. It is the responsibility of the owner or contractor to field verify ALL UTILITY MAINS prior to construction.
2. Any improvement in City right-of-way requires permit issued by City Engineering Department per Ordinance #1338.
3. No structure shall encroach onto any easement or right-of-way. Driveway entrance may require dip section or minimum 12 inch corrugated metal pipe.
4. DO NOT ALTER SIDEWALK. SIDEWALK MUST MEET AMERICANS WITH DISABILITIES ACT (ADA) STANDARDS.
5. All mailbox installations must be to City of Prescott standard detail 1-08. Any deviation must be specially permitted by the Engineering Department.
6. Approval of the Planning & Zoning Department is subject to all other easements, encumbrances, etc. or restriction which may apply to said property by virtue of any City Ordinances and/or state law and deed restrictions. The City takes no responsibility for said restrictions or requirements and the burden to comply with such restrictions lies solely with the property owner and/or applicant.

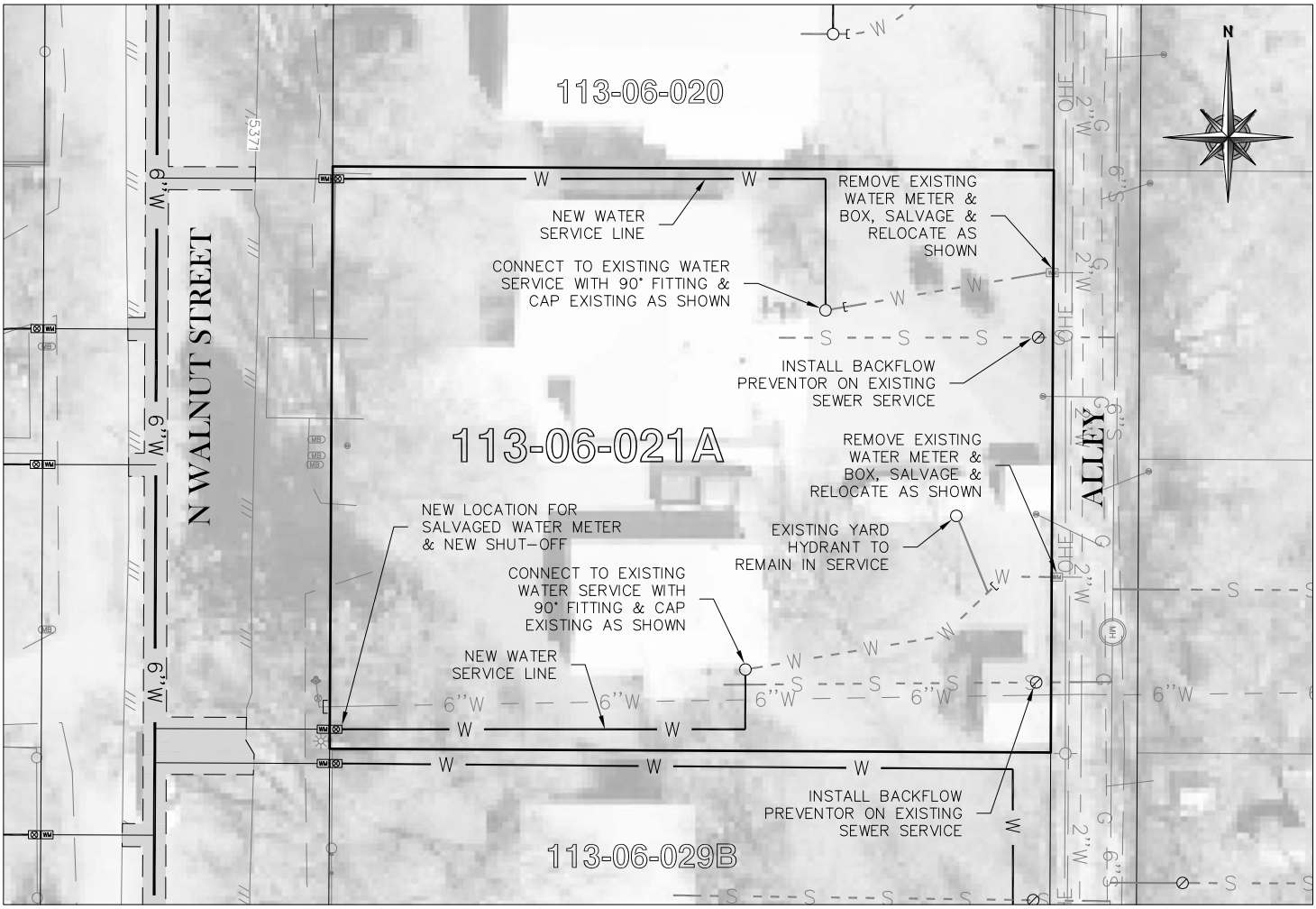

I, _____, the owner's agent or the owner of record, for the structure located at: _____.

By signing this document I agree to the proposed rerouting for my water service from the building to the new main as shown. I also understand & agree to the installation of a sewer backflow device as shown.

_____ _____ _____

Owner Name **Owner Signature** **Date**

SP-#22

EXHIBIT 'A'

CITY OF PRESCOTT
COMMUNITY DEVELOPMENT DEPARTMENT
BUILDING SAFETY DIVISION

PLOT PLAN SKETCH

Building Permit #: Job Address: 748 DIVISION ST

Scale: 1" = 30' Assessor's Parcel Number: 113-06-021B Meter Number: 1531-3178

Approved by: City of Prescott Building Division _____ Approved by: City of Prescott Engineering _____

1. It is the responsibility of the owner or contractor to field verify ALL UTILITY MAINS prior to construction.
2. Any improvement in City right-of-way requires permit issued by City Engineering Department per Ordinance #1338.
3. No structure shall encroach onto any easement or right-of-way. Driveway entrance may require dip section or minimum 12 inch corrugated metal pipe.
4. DO NOT ALTER SIDEWALK. SIDEWALK MUST MEET AMERICANS WITH DISABILITIES ACT (ADA) STANDARDS.
5. All mailbox installations must be to City of Prescott standard detail 1-08. Any deviation must be specially permitted by the Engineering Department.
6. Approval of the Planning & Zoning Department is subject to all other easements, encumbrances, etc. or restriction which may apply to said property by virtue of any City Ordinances and/or state law and deed restrictions. The City takes no responsibility for said restrictions or requirements and the burden to comply with such restrictions lies solely with the property owner and/or applicant.

I, _____, the owner's agent or the owner of record, for the structure located at: _____.

By signing this document I agree to the proposed rerouting for my water service from the building to the new main as shown. I also understand & agree to the installation of a sewer backflow device as shown.

SIGNED COPY ON FILE AT
GRANITE BASIN ENGINEERING, INC.

Owner Name **Owner Signature** **Date**

SP-#23

EXHIBIT 'A'

CITY OF PRESCOTT
COMMUNITY DEVELOPMENT DEPARTMENT
BUILDING SAFETY DIVISION

PLOT PLAN SKETCH

Building Permit #: Job Address: 750 DIVISION ST

Scale: 1" = 30' Assessor's Parcel Number: 113-06-022 Meter Number: ??????????

Approved by: City of Prescott Building Division _____ Approved by: City of Prescott Engineering _____

1. It is the responsibility of the owner or contractor to field verify ALL UTILITY MAINS prior to construction.
2. Any improvement in City right-of-way requires permit issued by City Engineering Department per Ordinance #1338.
3. No structure shall encroach onto any easement or right-of-way. Driveway entrance may require dip section or minimum 12 inch corrugated metal pipe.
4. DO NOT ALTER SIDEWALK. SIDEWALK MUST MEET AMERICANS WITH DISABILITIES ACT (ADA) STANDARDS.
5. All mailbox installations must be to City of Prescott standard detail 1-08. Any deviation must be specially permitted by the Engineering Department.
6. Approval of the Planning & Zoning Department is subject to all other easements, encumbrances, etc. or restriction which may apply to said property by virtue of any City Ordinances and/or state law and deed restrictions. The City takes no responsibility for said restrictions or requirements and the burden to comply with such restrictions lies solely with the property owner and/or applicant.

I, _____, the owner's agent or the owner of record, for the structure located at: _____.

By signing this document I agree to the proposed rerouting for my water service from the building to the new main as shown. I also understand & agree to the installation of a sewer backflow device as shown.

Owner Name	Owner Signature	Date

SP-#24

EXHIBIT 'A'

CITY OF PRESCOTT
COMMUNITY DEVELOPMENT DEPARTMENT
BUILDING SAFETY DIVISION

PLOT PLAN SKETCH

Building Permit #: Job Address: 745 Miller Valley Rd

Scale: 1" = 40' Assessor's Parcel Number: 113-06-023 Meter Number: 2019-1184

Approved by: City of Prescott Building Division _____ Approved by: City of Prescott Engineering _____

1. It is the responsibility of the owner or contractor to field verify ALL UTILITY MAINS prior to construction.
2. Any improvement in City right-of-way requires permit issued by City Engineering Department per Ordinance #1338.
3. No structure shall encroach onto any easement or right-of-way. Driveway entrance may require dip section or minimum 12 inch corrugated metal pipe.
4. DO NOT ALTER SIDEWALK. SIDEWALK MUST MEET AMERICANS WITH DISABILITIES ACT (ADA) STANDARDS.
5. All mailbox installations must be to City of Prescott standard detail 1-08. Any deviation must be specially permitted by the Engineering Department.
6. Approval of the Planning & Zoning Department is subject to all other easements, encumbrances, etc. or restriction which may apply to said property by virtue of any City Ordinances and/or state law and deed restrictions. The City takes no responsibility for said restrictions or requirements and the burden to comply with such restrictions lies solely with the property owner and/or applicant.

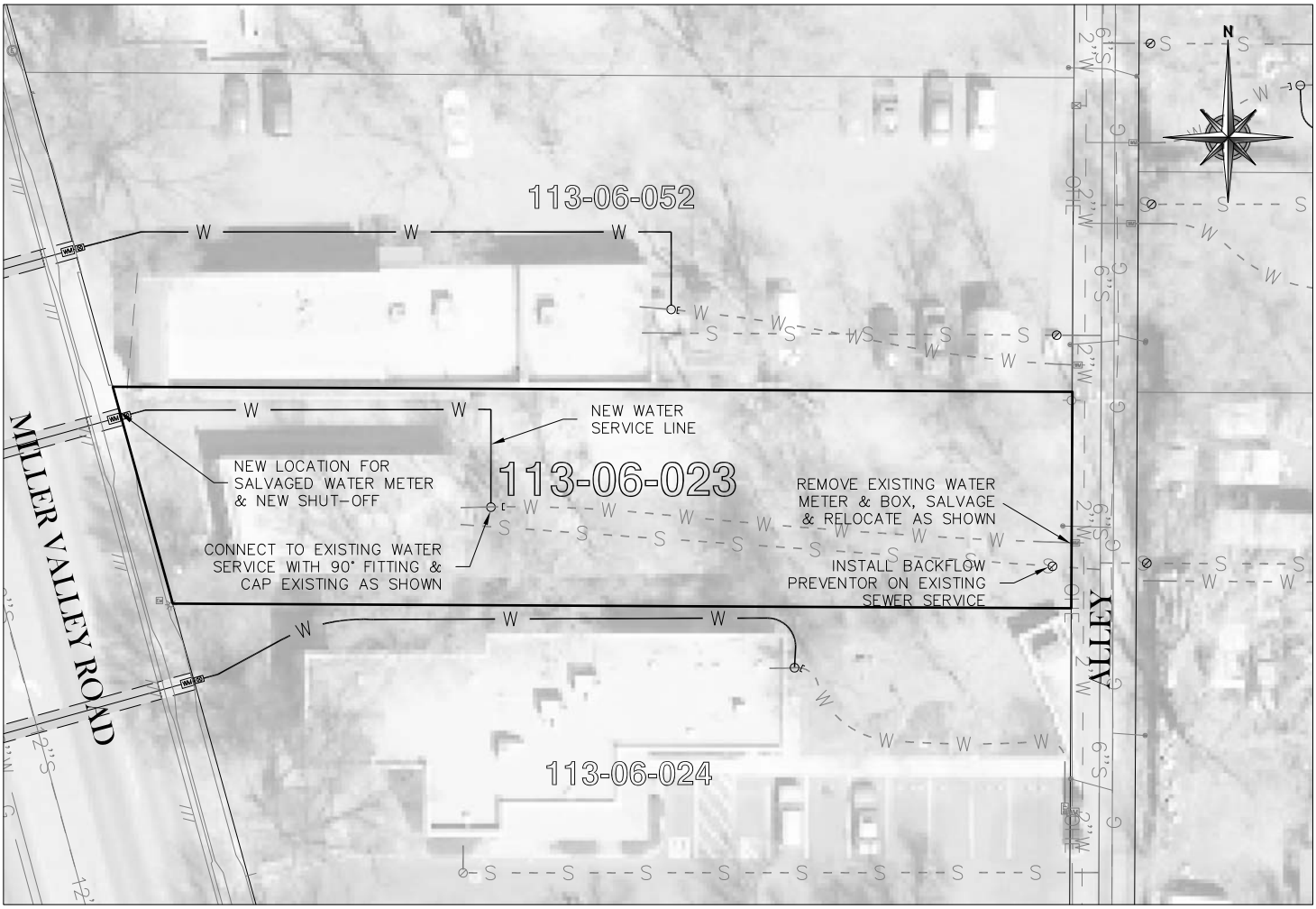

I, _____, the owner's agent or the owner of record, for the structure located at: _____.

By signing this document I agree to the proposed rerouting for my water service from the building to the new main as shown. I also understand & agree to the installation of a sewer backflow device as shown.

Owner Name	Owner Signature	Date

SP-#25

EXHIBIT 'A'

CITY OF PRESCOTT
COMMUNITY DEVELOPMENT DEPARTMENT
BUILDING SAFETY DIVISION

PLOT PLAN SKETCH

Building Permit #: Job Address: 743 Miller Valley Rd

Scale: 1" = 30' Assessor's Parcel Number: 113-06-024 Meter Number: 2020-9667

Approved by: City of Prescott Building Division _____ Approved by: City of Prescott Engineering _____

1. It is the responsibility of the owner or contractor to field verify ALL UTILITY MAINS prior to construction.
2. Any improvement in City right-of-way requires permit issued by City Engineering Department per Ordinance #1338.
3. No structure shall encroach onto any easement or right-of-way. Driveway entrance may require dip section or minimum 12 inch corrugated metal pipe.
4. DO NOT ALTER SIDEWALK. SIDEWALK MUST MEET AMERICANS WITH DISABILITIES ACT (ADA) STANDARDS.
5. All mailbox installations must be to City of Prescott standard detail 1-08. Any deviation must be specially permitted by the Engineering Department.
6. Approval of the Planning & Zoning Department is subject to all other easements, encumbrances, etc. or restriction which may apply to said property by virtue of any City Ordinances and/or state law and deed restrictions. The City takes no responsibility for said restrictions or requirements and the burden to comply with such restrictions lies solely with the property owner and/or applicant.

I, _____, the owner's agent or the owner of record, for the structure located at: _____.

By signing this document I agree to the proposed rerouting for my water service from the building to the new main as shown. I also understand & agree to the installation of a sewer backflow device as shown.

_____ _____ _____

Owner Name **Owner Signature** **Date**

SP-#26

EXHIBIT 'A'

CITY OF PRESCOTT
COMMUNITY DEVELOPMENT DEPARTMENT
BUILDING SAFETY DIVISION

PLOT PLAN SKETCH

Building Permit #: Job Address: 736 N WALNUT ST

Scale: 1" = 40' Assessor's Parcel Number: 113-06-025 Meter Number: 2019-1182

Approved by: City of Prescott Building Division _____ Approved by: City of Prescott Engineering _____

1. It is the responsibility of the owner or contractor to field verify ALL UTILITY MAINS prior to construction.
2. Any improvement in City right-of-way requires permit issued by City Engineering Department per Ordinance #1338.
3. No structure shall encroach onto any easement or right-of-way. Driveway entrance may require dip section or minimum 12 inch corrugated metal pipe.
4. DO NOT ALTER SIDEWALK. SIDEWALK MUST MEET AMERICANS WITH DISABILITIES ACT (ADA) STANDARDS.
5. All mailbox installations must be to City of Prescott standard detail 1-08. Any deviation must be specially permitted by the Engineering Department.
6. Approval of the Planning & Zoning Department is subject to all other easements, encumbrances, etc. or restriction which may apply to said property by virtue of any City Ordinances and/or state law and deed restrictions. The City takes no responsibility for said restrictions or requirements and the burden to comply with such restrictions lies solely with the property owner and/or applicant.

I, _____, the owner's agent or the owner of record, for the structure located at: _____.

By signing this document I agree to the proposed rerouting for my water service from the building to the new main as shown. I also understand & agree to the installation of a sewer backflow device as shown.

Owner Name _____ **Owner Signature** _____ **Date** _____

SP-#27

EXHIBIT 'A'

CITY OF PRESCOTT
COMMUNITY DEVELOPMENT DEPARTMENT
BUILDING SAFETY DIVISION

PLOT PLAN SKETCH

Building Permit #: Job Address: 731 Miller Valley Rd

Scale: 1" = 30' Assessor's Parcel Number: 113-06-026A Meter Number: 2019-1183

Approved by: City of Prescott Building Division _____ Approved by: City of Prescott Engineering _____

1. It is the responsibility of the owner or contractor to field verify ALL UTILITY MAINS prior to construction.
2. Any improvement in City right-of-way requires permit issued by City Engineering Department per Ordinance #1338.
3. No structure shall encroach onto any easement or right-of-way. Driveway entrance may require dip section or minimum 12 inch corrugated metal pipe.
4. DO NOT ALTER SIDEWALK. SIDEWALK MUST MEET AMERICANS WITH DISABILITIES ACT (ADA) STANDARDS.
5. All mailbox installations must be to City of Prescott standard detail 1-08. Any deviation must be specially permitted by the Engineering Department.
6. Approval of the Planning & Zoning Department is subject to all other easements, encumbrances, etc. or restriction which may apply to said property by virtue of any City Ordinances and/or state law and deed restrictions. The City takes no responsibility for said restrictions or requirements and the burden to comply with such restrictions lies solely with the property owner and/or applicant.

I, _____, the owner's agent or the owner of record, for the structure located at: _____.

By signing this document I agree to the proposed rerouting for my water service from the building to the new main as shown. I also understand & agree to the installation of a sewer backflow device as shown.

Owner Name	Owner Signature	Date

SP-#28

EXHIBIT 'A'

CITY OF PRESCOTT
COMMUNITY DEVELOPMENT DEPARTMENT
BUILDING SAFETY DIVISION

PLOT PLAN SKETCH

Building Permit #: Job Address: 732 N WALNUT ST

Scale: 1" = 30' Assessor's Parcel Number: 113-06-027A Meter Number: N/A

Approved by: City of Prescott Building Division _____ Approved by: City of Prescott Engineering _____

1. It is the responsibility of the owner or contractor to field verify ALL UTILITY MAINS prior to construction.
2. Any improvement in City right-of-way requires permit issued by City Engineering Department per Ordinance #1338.
3. No structure shall encroach onto any easement or right-of-way. Driveway entrance may require dip section or minimum 12 inch corrugated metal pipe.
4. DO NOT ALTER SIDEWALK. SIDEWALK MUST MEET AMERICANS WITH DISABILITIES ACT (ADA) STANDARDS.
5. All mailbox installations must be to City of Prescott standard detail 1-08. Any deviation must be specially permitted by the Engineering Department.
6. Approval of the Planning & Zoning Department is subject to all other easements, encumbrances, etc. or restriction which may apply to said property by virtue of any City Ordinances and/or state law and deed restrictions. The City takes no responsibility for said restrictions or requirements and the burden to comply with such restrictions lies solely with the property owner and/or applicant.

I, _____, the owner's agent or the owner of record, for the structure located at: _____.

By signing this document I agree to the proposed rerouting for my water service from the building to the new main as shown. I also understand & agree to the installation of a sewer backflow device as shown.

_____ _____ _____

Owner Name **Owner Signature** **Date**

SP-#29

EXHIBIT 'A'

CITY OF PRESCOTT
COMMUNITY DEVELOPMENT DEPARTMENT
BUILDING SAFETY DIVISION

PLOT PLAN SKETCH

Building Permit #: Job Address: 730 N WALNUT ST

Scale: 1" = 30' Assessor's Parcel Number: 113-06-027B Meter Number: 2019-1181

Approved by: City of Prescott Building Division _____ Approved by: City of Prescott Engineering _____

1. It is the responsibility of the owner or contractor to field verify ALL UTILITY MAINS prior to construction.
2. Any improvement in City right-of-way requires permit issued by City Engineering Department per Ordinance #1338.
3. No structure shall encroach onto any easement or right-of-way. Driveway entrance may require dip section or minimum 12 inch corrugated metal pipe.
4. DO NOT ALTER SIDEWALK. SIDEWALK MUST MEET AMERICANS WITH DISABILITIES ACT (ADA) STANDARDS.
5. All mailbox installations must be to City of Prescott standard detail 1-08. Any deviation must be specially permitted by the Engineering Department.
6. Approval of the Planning & Zoning Department is subject to all other easements, encumbrances, etc. or restriction which may apply to said property by virtue of any City Ordinances and/or state law and deed restrictions. The City takes no responsibility for said restrictions or requirements and the burden to comply with such restrictions lies solely with the property owner and/or applicant.

I, _____, the owner's agent or the owner of record, for the structure located at: _____.

By signing this document I agree to the proposed rerouting for my water service from the building to the new main as shown. I also understand & agree to the installation of a sewer backflow device as shown.

Owner Name _____ **Owner Signature** _____ **Date** _____

SP-#30

EXHIBIT 'A'

CITY OF PRESCOTT
COMMUNITY DEVELOPMENT DEPARTMENT
BUILDING SAFETY DIVISION

PLOT PLAN SKETCH

Building Permit #: Job Address: 777 N WALNUT ST

Scale: 1 inch = 30 ft. Assessor's Parcel Number: 113-06-029A Meter Number: 1533-2125 & 1533-2123

Approved by: City of Prescott Building Division _____ Approved by: City of Prescott Engineering _____

1. It is the responsibility of the owner or contractor to field verify ALL UTILITY MAINS prior to construction.
2. Any improvement in City right-of-way requires permit issued by City Engineering Department per Ordinance #1338.
3. No structure shall encroach onto any easement or right-of-way. Driveway entrance may require dip section or minimum 12 inch corrugated metal pipe.
4. DO NOT ALTER SIDEWALK. SIDEWALK MUST MEET AMERICANS WITH DISABILITIES ACT (ADA) STANDARDS.
5. All mailbox installations must be to City of Prescott standard detail 1-08. Any deviation must be specially permitted by the Engineering Department.
6. Approval of the Planning & Zoning Department is subject to all other easements, encumbrances, etc. or restriction which may apply to said property by virtue of any City Ordinances and/or state law and deed restrictions. The City takes no responsibility for said restrictions or requirements and the burden to comply with such restrictions lies solely with the property owner and/or applicant.

I, _____, the owner's agent or the owner of record, for the structure located at: _____.

By signing this document I agree to the proposed rerouting for my water service from the building to the new main as shown. I also understand & agree to the installation of a sewer backflow device as shown.

SIGNED COPY ON FILE AT
GRANITE BASIN ENGINEERING, INC.

Owner Name	Owner Signature	Date

SP-#31

EXHIBIT 'A'

CITY OF PRESCOTT
COMMUNITY DEVELOPMENT DEPARTMENT
BUILDING SAFETY DIVISION

PLOT PLAN SKETCH

Building Permit #: Job Address: 797 N WALNUT ST

Scale: 1 inch = 30 ft. Assessor's Parcel Number: 113-06-029B Meter Number: N/A

Approved by: City of Prescott Building Division _____ Approved by: City of Prescott Engineering _____

1. It is the responsibility of the owner or contractor to field verify ALL UTILITY MAINS prior to construction.
2. Any improvement in City right-of-way requires permit issued by City Engineering Department per Ordinance #1338.
3. No structure shall encroach onto any easement or right-of-way. Driveway entrance may require dip section or minimum 12 inch corrugated metal pipe.
4. DO NOT ALTER SIDEWALK. SIDEWALK MUST MEET AMERICANS WITH DISABILITIES ACT (ADA) STANDARDS.
5. All mailbox installations must be to City of Prescott standard detail 1-08. Any deviation must be specially permitted by the Engineering Department.
6. Approval of the Planning & Zoning Department is subject to all other easements, encumbrances, etc. or restriction which may apply to said property by virtue of any City Ordinances and/or state law and deed restrictions. The City takes no responsibility for said restrictions or requirements and the burden to comply with such restrictions lies solely with the property owner and/or applicant.

I, _____, the owner's agent or the owner of record, for the structure located at: _____.

By signing this document I agree to the proposed rerouting for my water service from the building to the new main as shown. I also understand & agree to the installation of a sewer backflow device as shown.

SIGNED COPY ON FILE AT
GRANITE BASIN ENGINEERING, INC.

Owner Name **Owner Signature** **Date**

SP-#32

EXHIBIT 'A'

CITY OF PRESCOTT
COMMUNITY DEVELOPMENT DEPARTMENT
BUILDING SAFETY DIVISION

PLOT PLAN SKETCH

Building Permit #: Job Address: 746 DIVISION ST

Scale: 1" = 30' Assessor's Parcel Number: 113-06-030 Meter Number: 1533-2121

Approved by: City of Prescott Building Division _____ Approved by: City of Prescott Engineering _____

1. It is the responsibility of the owner or contractor to field verify ALL UTILITY MAINS prior to construction.
2. Any improvement in City right-of-way requires permit issued by City Engineering Department per Ordinance #1338.
3. No structure shall encroach onto any easement or right-of-way. Driveway entrance may require dip section or minimum 12 inch corrugated metal pipe.
4. DO NOT ALTER SIDEWALK. SIDEWALK MUST MEET AMERICANS WITH DISABILITIES ACT (ADA) STANDARDS.
5. All mailbox installations must be to City of Prescott standard detail 1-08. Any deviation must be specially permitted by the Engineering Department.
6. Approval of the Planning & Zoning Department is subject to all other easements, encumbrances, etc. or restriction which may apply to said property by virtue of any City Ordinances and/or state law and deed restrictions. The City takes no responsibility for said restrictions or requirements and the burden to comply with such restrictions lies solely with the property owner and/or applicant.

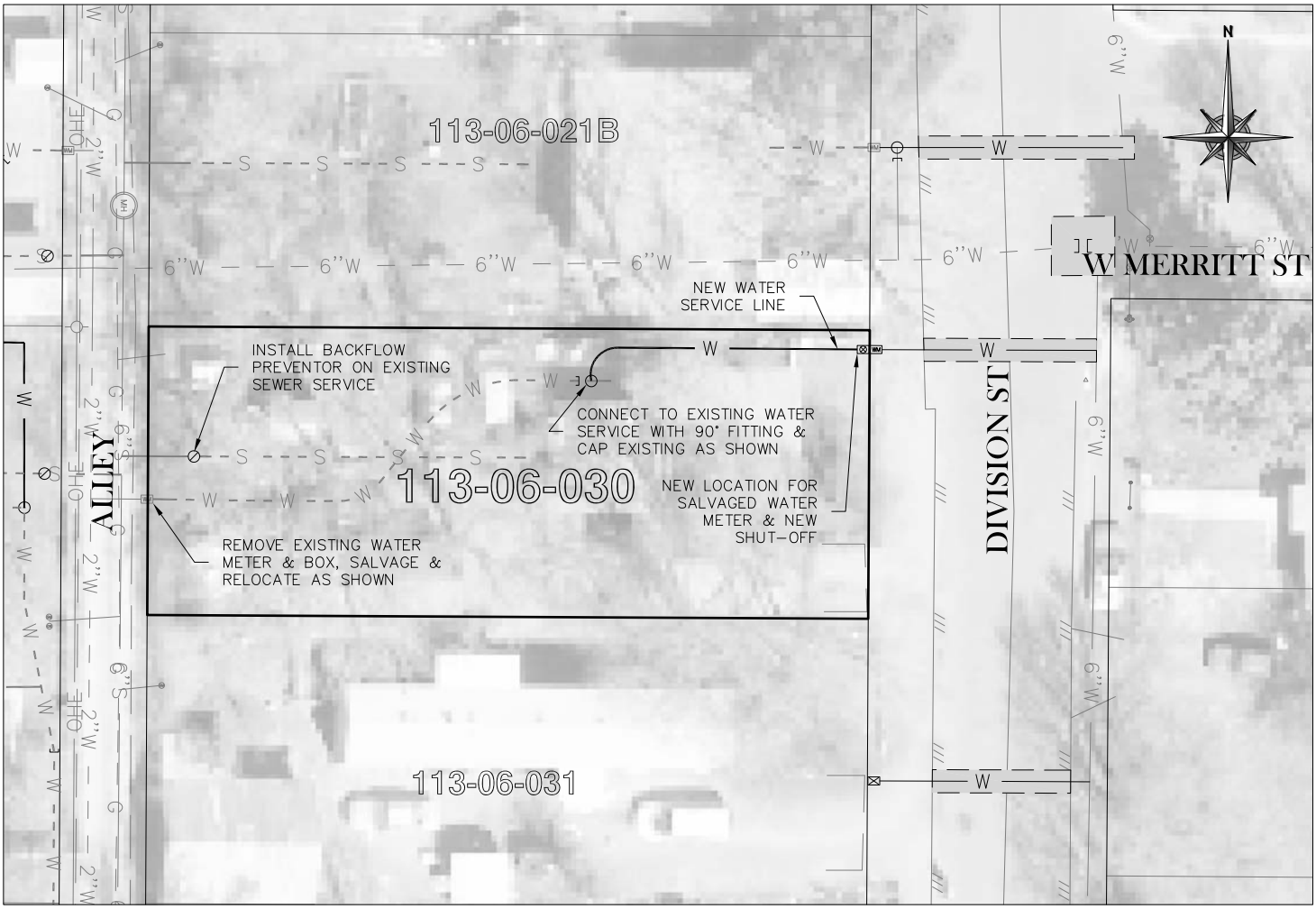

I, _____, the owner's agent or the owner of record, for the structure located at: _____.

By signing this document I agree to the proposed rerouting for my water service from the building to the new main as shown. I also understand & agree to the installation of a sewer backflow device as shown.

_____ _____ _____

Owner Name **Owner Signature** **Date**

SP-#33

EXHIBIT 'A'

CITY OF PRESCOTT
COMMUNITY DEVELOPMENT DEPARTMENT
BUILDING SAFETY DIVISION

PLOT PLAN SKETCH

Building Permit #: Job Address: 744 DIVISION ST

Scale: 1" = 30' Assessor's Parcel Number: 113-06-031 Meter Number: N/A

Approved by: City of Prescott Building Division _____ Approved by: City of Prescott Engineering _____

1. It is the responsibility of the owner or contractor to field verify ALL UTILITY MAINS prior to construction.
2. Any improvement in City right-of-way requires permit issued by City Engineering Department per Ordinance #1338.
3. No structure shall encroach onto any easement or right-of-way. Driveway entrance may require dip section or minimum 12 inch corrugated metal pipe.
4. DO NOT ALTER SIDEWALK. SIDEWALK MUST MEET AMERICANS WITH DISABILITIES ACT (ADA) STANDARDS.
5. All mailbox installations must be to City of Prescott standard detail 1-08. Any deviation must be specially permitted by the Engineering Department.
6. Approval of the Planning & Zoning Department is subject to all other easements, encumbrances, etc. or restriction which may apply to said property by virtue of any City Ordinances and/or state law and deed restrictions. The City takes no responsibility for said restrictions or requirements and the burden to comply with such restrictions lies solely with the property owner and/or applicant.

I, _____, the owner's agent or the owner of record, for the structure located at: _____.

By signing this document I agree to the proposed rerouting for my water service from the building to the new main as shown. I also understand & agree to the installation of a sewer backflow device as shown.

Owner Name	Owner Signature	Date

SP-#34

EXHIBIT 'A'

CITY OF PRESCOTT
COMMUNITY DEVELOPMENT DEPARTMENT
BUILDING SAFETY DIVISION

PLOT PLAN SKETCH

Building Permit #: Job Address: 742 DIVISION ST

Scale: 1" = 30' Assessor's Parcel Number: 113-06-032A Meter Number: 1533-2050

Approved by: City of Prescott Building Division _____ Approved by: City of Prescott Engineering _____

1. It is the responsibility of the owner or contractor to field verify ALL UTILITY MAINS prior to construction.
2. Any improvement in City right-of-way requires permit issued by City Engineering Department per Ordinance #1338.
3. No structure shall encroach onto any easement or right-of-way. Driveway entrance may require dip section or minimum 12 inch corrugated metal pipe.
4. DO NOT ALTER SIDEWALK. SIDEWALK MUST MEET AMERICANS WITH DISABILITIES ACT (ADA) STANDARDS.
5. All mailbox installations must be to City of Prescott standard detail 1-08. Any deviation must be specially permitted by the Engineering Department.
6. Approval of the Planning & Zoning Department is subject to all other easements, encumbrances, etc. or restriction which may apply to said property by virtue of any City Ordinances and/or state law and deed restrictions. The City takes no responsibility for said restrictions or requirements and the burden to comply with such restrictions lies solely with the property owner and/or applicant.

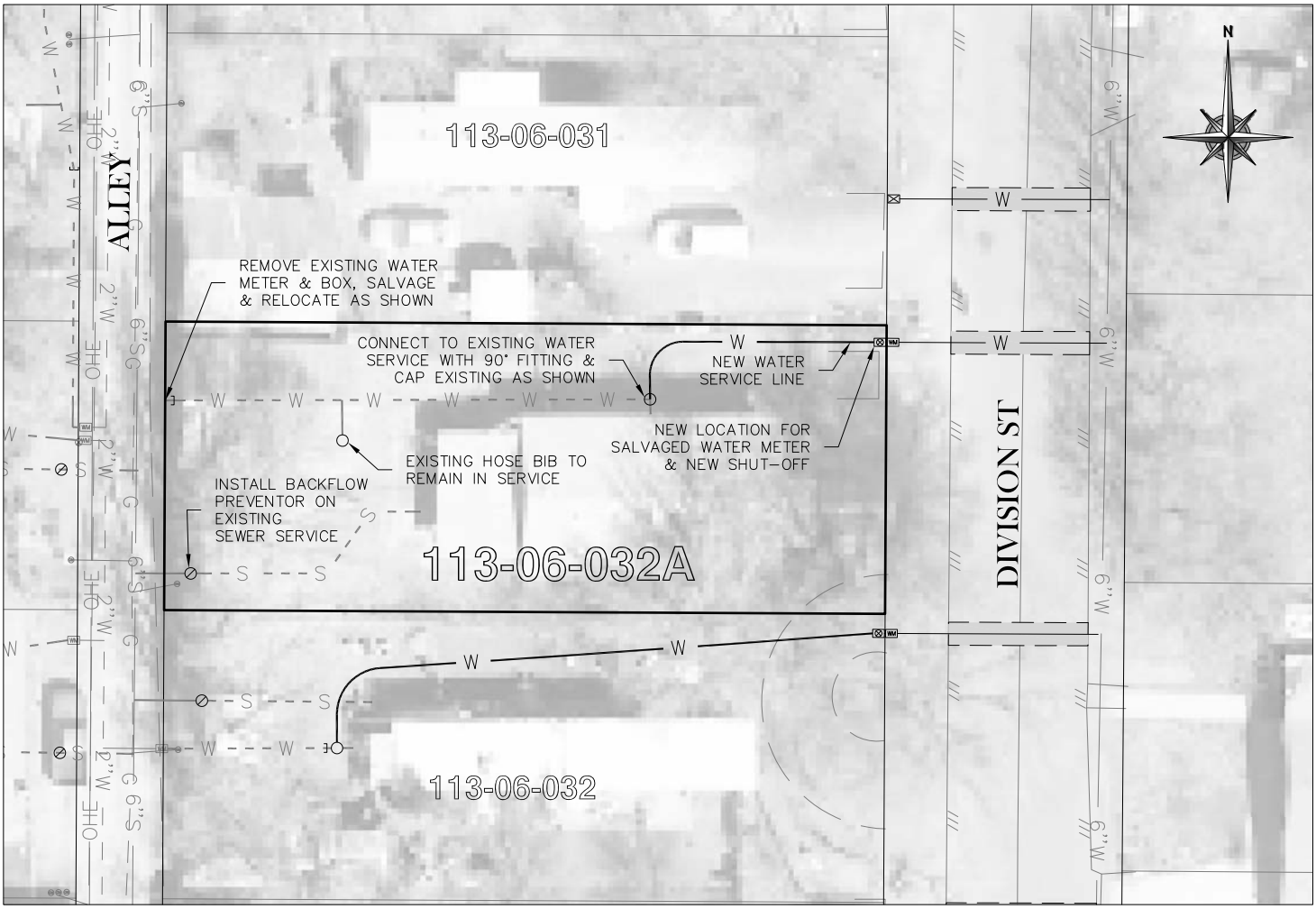

I, _____, the owner's agent or the owner of record, for the structure located at: _____.

By signing this document I agree to the proposed rerouting for my water service from the building to the new main as shown. I also understand & agree to the installation of a sewer backflow device as shown.

Owner Name _____ **Owner Signature** _____ **Date** _____

SP-#35

EXHIBIT 'A'

CITY OF PRESCOTT
COMMUNITY DEVELOPMENT DEPARTMENT
BUILDING SAFETY DIVISION

PLOT PLAN SKETCH

Building Permit #: Job Address: 740 DIVISION ST

Scale: 1" = 30' Assessor's Parcel Number: 113-06-032 Meter Number: 1533-2053

Approved by: City of Prescott Building Division _____ Approved by: City of Prescott Engineering _____

1. It is the responsibility of the owner or contractor to field verify ALL UTILITY MAINS prior to construction.
2. Any improvement in City right-of-way requires permit issued by City Engineering Department per Ordinance #1338.
3. No structure shall encroach onto any easement or right-of-way. Driveway entrance may require dip section or minimum 12 inch corrugated metal pipe.
4. DO NOT ALTER SIDEWALK. SIDEWALK MUST MEET AMERICANS WITH DISABILITIES ACT (ADA) STANDARDS.
5. All mailbox installations must be to City of Prescott standard detail 1-08. Any deviation must be specially permitted by the Engineering Department.
6. Approval of the Planning & Zoning Department is subject to all other easements, encumbrances, etc. or restriction which may apply to said property by virtue of any City Ordinances and/or state law and deed restrictions. The City takes no responsibility for said restrictions or requirements and the burden to comply with such restrictions lies solely with the property owner and/or applicant.

I, _____, the owner's agent or the owner of record, for the structure located at: _____.

By signing this document I agree to the proposed rerouting for my water service from the building to the new main as shown. I also understand & agree to the installation of a sewer backflow device as shown.

_____ _____ _____

Owner Name **Owner Signature** **Date**

SP-#36

EXHIBIT 'A'

CITY OF PRESCOTT
COMMUNITY DEVELOPMENT DEPARTMENT
BUILDING SAFETY DIVISION

PLOT PLAN SKETCH

Building Permit #: Job Address: 731 N WALNUT ST

Scale: 1" = 30' Assessor's Parcel Number: 113-06-033A Meter Number: 1533-2029

Approved by: City of Prescott Building Division _____ Approved by: City of Prescott Engineering _____

1. It is the responsibility of the owner or contractor to field verify ALL UTILITY MAINS prior to construction.
2. Any improvement in City right-of-way requires permit issued by City Engineering Department per Ordinance #1338.
3. No structure shall encroach onto any easement or right-of-way. Driveway entrance may require dip section or minimum 12 inch corrugated metal pipe.
4. DO NOT ALTER SIDEWALK. SIDEWALK MUST MEET AMERICANS WITH DISABILITIES ACT (ADA) STANDARDS.
5. All mailbox installations must be to City of Prescott standard detail 1-08. Any deviation must be specially permitted by the Engineering Department.
6. Approval of the Planning & Zoning Department is subject to all other easements, encumbrances, etc. or restriction which may apply to said property by virtue of any City Ordinances and/or state law and deed restrictions. The City takes no responsibility for said restrictions or requirements and the burden to comply with such restrictions lies solely with the property owner and/or applicant.

I, _____, the owner's agent or the owner of record, for the structure located at: _____.

By signing this document I agree to the proposed rerouting for my water service from the building to the new main as shown. I also understand & agree to the installation of a sewer backflow device as shown.

Owner Name	Owner Signature	Date

SP-#37

EXHIBIT 'A'

CITY OF PRESCOTT
COMMUNITY DEVELOPMENT DEPARTMENT
BUILDING SAFETY DIVISION

PLOT PLAN SKETCH

Building Permit #: Job Address: 739 N WALNUT ST

Scale: 1 inch = 30 ft. Assessor's Parcel Number: 113-06-033B Meter Number: 1826-7744

Approved by: City of Prescott Building Division _____ Approved by: City of Prescott Engineering _____

1. It is the responsibility of the owner or contractor to field verify ALL UTILITY MAINS prior to construction.
2. Any improvement in City right-of-way requires permit issued by City Engineering Department per Ordinance #1338.
3. No structure shall encroach onto any easement or right-of-way. Driveway entrance may require dip section or minimum 12 inch corrugated metal pipe.
4. DO NOT ALTER SIDEWALK. SIDEWALK MUST MEET AMERICANS WITH DISABILITIES ACT (ADA) STANDARDS.
5. All mailbox installations must be to City of Prescott standard detail 1-08. Any deviation must be specially permitted by the Engineering Department.
6. Approval of the Planning & Zoning Department is subject to all other easements, encumbrances, etc. or restriction which may apply to said property by virtue of any City Ordinances and/or state law and deed restrictions. The City takes no responsibility for said restrictions or requirements and the burden to comply with such restrictions lies solely with the property owner and/or applicant.

I, _____, the owner's agent or the owner of record, for the structure located at: _____.

By signing this document I agree to the proposed rerouting for my water service from the building to the new main as shown. I also understand & agree to the installation of a sewer backflow device as shown.

_____ _____ _____

Owner Name **Owner Signature** **Date**

SP-#38

EXHIBIT 'A'

CITY OF PRESCOTT
COMMUNITY DEVELOPMENT DEPARTMENT
BUILDING SAFETY DIVISION

PLOT PLAN SKETCH

Building Permit #: Job Address: 738 DIVISION ST

Scale: 1" = 30' Assessor's Parcel Number: 113-06-034 Meter Number: 1533-2051

Approved by: City of Prescott Building Division _____ Approved by: City of Prescott Engineering _____

1. It is the responsibility of the owner or contractor to field verify ALL UTILITY MAINS prior to construction.
2. Any improvement in City right-of-way requires permit issued by City Engineering Department per Ordinance #1338.
3. No structure shall encroach onto any easement or right-of-way. Driveway entrance may require dip section or minimum 12 inch corrugated metal pipe.
4. DO NOT ALTER SIDEWALK. SIDEWALK MUST MEET AMERICANS WITH DISABILITIES ACT (ADA) STANDARDS.
5. All mailbox installations must be to City of Prescott standard detail 1-08. Any deviation must be specially permitted by the Engineering Department.
6. Approval of the Planning & Zoning Department is subject to all other easements, encumbrances, etc. or restriction which may apply to said property by virtue of any City Ordinances and/or state law and deed restrictions. The City takes no responsibility for said restrictions or requirements and the burden to comply with such restrictions lies solely with the property owner and/or applicant.

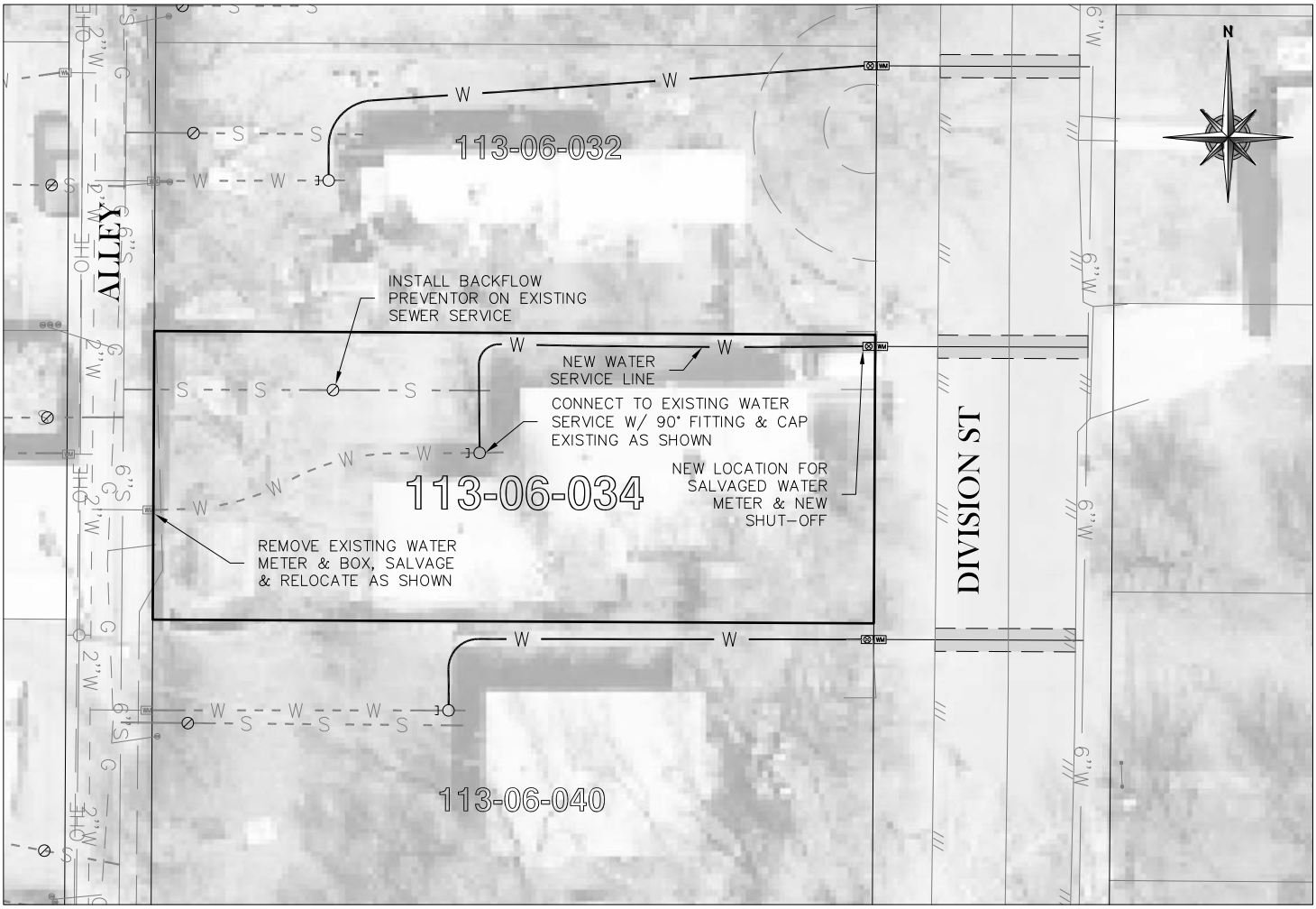

I, _____, the owner's agent or the owner of record, for the structure located at: _____.

By signing this document I agree to the proposed rerouting for my water service from the building to the new main as shown. I also understand & agree to the installation of a sewer backflow device as shown.

_____ _____ _____

Owner Name **Owner Signature** **Date**

SP-#39

EXHIBIT 'A'

CITY OF PRESCOTT
COMMUNITY DEVELOPMENT DEPARTMENT
BUILDING SAFETY DIVISION

PLOT PLAN SKETCH

Building Permit #: Job Address: 728 N WALNUT ST

Scale: 1" = 30' Assessor's Parcel Number: 113-06-035 Meter Number: 2019-1185

Approved by: City of Prescott Building Division _____ Approved by: City of Prescott Engineering _____

1. It is the responsibility of the owner or contractor to field verify ALL UTILITY MAINS prior to construction.
2. Any improvement in City right-of-way requires permit issued by City Engineering Department per Ordinance #1338.
3. No structure shall encroach onto any easement or right-of-way. Driveway entrance may require dip section or minimum 12 inch corrugated metal pipe.
4. DO NOT ALTER SIDEWALK. SIDEWALK MUST MEET AMERICANS WITH DISABILITIES ACT (ADA) STANDARDS.
5. All mailbox installations must be to City of Prescott standard detail 1-08. Any deviation must be specially permitted by the Engineering Department.
6. Approval of the Planning & Zoning Department is subject to all other easements, encumbrances, etc. or restriction which may apply to said property by virtue of any City Ordinances and/or state law and deed restrictions. The City takes no responsibility for said restrictions or requirements and the burden to comply with such restrictions lies solely with the property owner and/or applicant.

I, _____, the owner's agent or the owner of record, for the structure located at: _____.

By signing this document I agree to the proposed rerouting for my water service from the building to the new main as shown. I also understand & agree to the installation of a sewer backflow device as shown.

Owner Name	Owner Signature	Date

SP-#40

EXHIBIT 'A'

CITY OF PRESCOTT
COMMUNITY DEVELOPMENT DEPARTMENT
BUILDING SAFETY DIVISION

PLOT PLAN SKETCH

Building Permit #: Job Address: 723 MILLER VALLEY RD

Scale: 1" = 30' Assessor's Parcel Number: 113-06-037 Meter Number: SEE PLAN

Approved by: City of Prescott Building Division _____ Approved by: City of Prescott Engineering _____

1. It is the responsibility of the owner or contractor to field verify ALL UTILITY MAINS prior to construction.
2. Any improvement in City right-of-way requires permit issued by City Engineering Department per Ordinance #1338.
3. No structure shall encroach onto any easement or right-of-way. Driveway entrance may require dip section or minimum 12 inch corrugated metal pipe.
4. DO NOT ALTER SIDEWALK. SIDEWALK MUST MEET AMERICANS WITH DISABILITIES ACT (ADA) STANDARDS.
5. All mailbox installations must be to City of Prescott standard detail 1-08. Any deviation must be specially permitted by the Engineering Department.
6. Approval of the Planning & Zoning Department is subject to all other easements, encumbrances, etc. or restriction which may apply to said property by virtue of any City Ordinances and/or state law and deed restrictions. The City takes no responsibility for said restrictions or requirements and the burden to comply with such restrictions lies solely with the property owner and/or applicant.

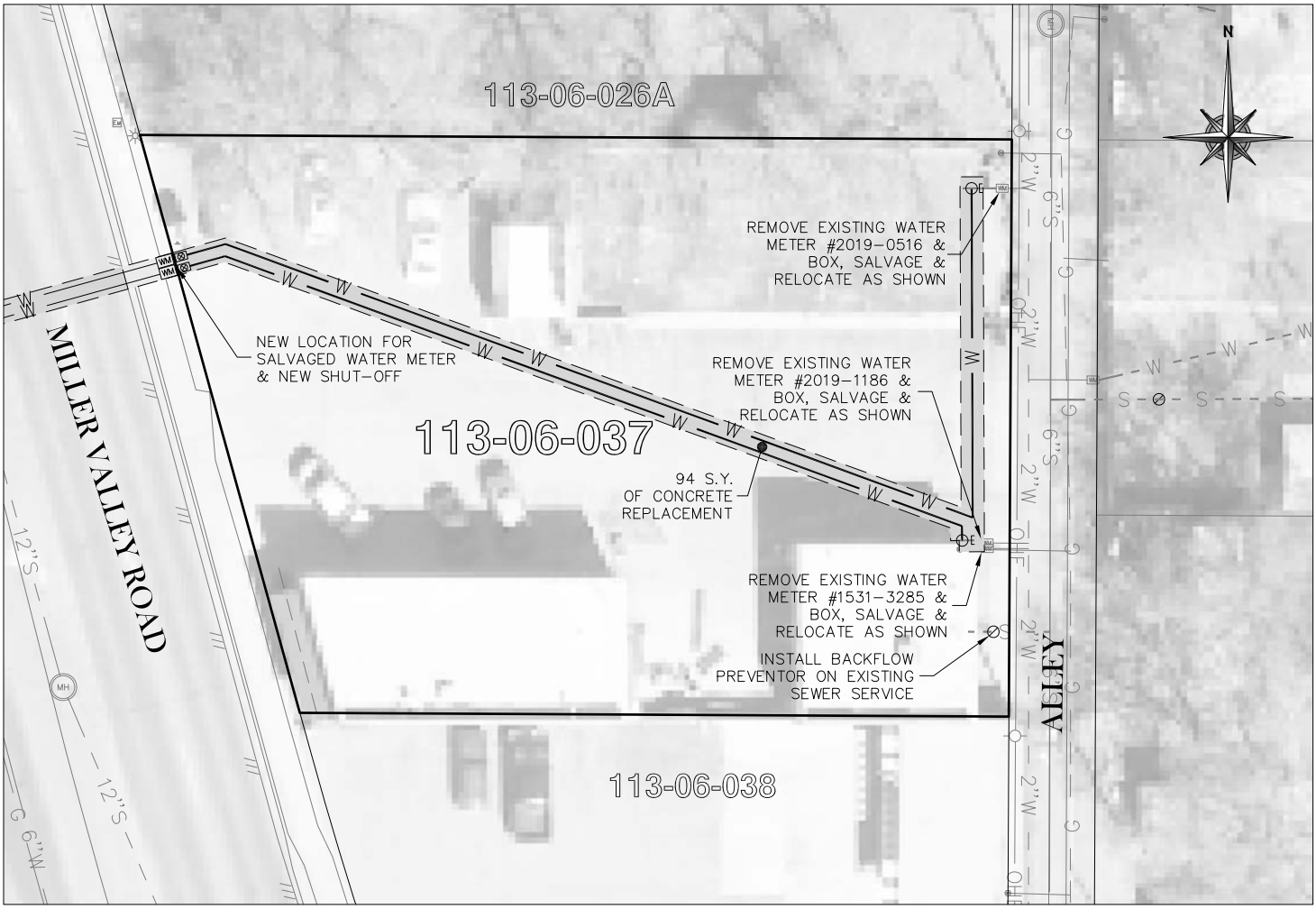

I, _____, the owner's agent or the owner of record, for the structure located at: _____.

By signing this document I agree to the proposed rerouting for my water service from the building to the new main as shown. I also understand & agree to the installation of a sewer backflow device as shown.

Owner Name _____ **Owner Signature** _____ **Date** _____

SP-#41

EXHIBIT 'A'

CITY OF PRESCOTT
COMMUNITY DEVELOPMENT DEPARTMENT
BUILDING SAFETY DIVISION

PLOT PLAN SKETCH

Building Permit #: Job Address: 711 & 719 MILLER VALLEY RD

Scale: 1" = 30' Assessor's Parcel Number: 113-06-038 & 039 Meter Number: 1531-3284

Approved by: City of Prescott Building Division _____ Approved by: City of Prescott Engineering _____

1. It is the responsibility of the owner or contractor to field verify ALL UTILITY MAINS prior to construction.
2. Any improvement in City right-of-way requires permit issued by City Engineering Department per Ordinance #1338.
3. No structure shall encroach onto any easement or right-of-way. Driveway entrance may require dip section or minimum 12 inch corrugated metal pipe.
4. DO NOT ALTER SIDEWALK. SIDEWALK MUST MEET AMERICANS WITH DISABILITIES ACT (ADA) STANDARDS.
5. All mailbox installations must be to City of Prescott standard detail 1-08. Any deviation must be specially permitted by the Engineering Department.
6. Approval of the Planning & Zoning Department is subject to all other easements, encumbrances, etc. or restriction which may apply to said property by virtue of any City Ordinances and/or state law and deed restrictions. The City takes no responsibility for said restrictions or requirements and the burden to comply with such restrictions lies solely with the property owner and/or applicant.

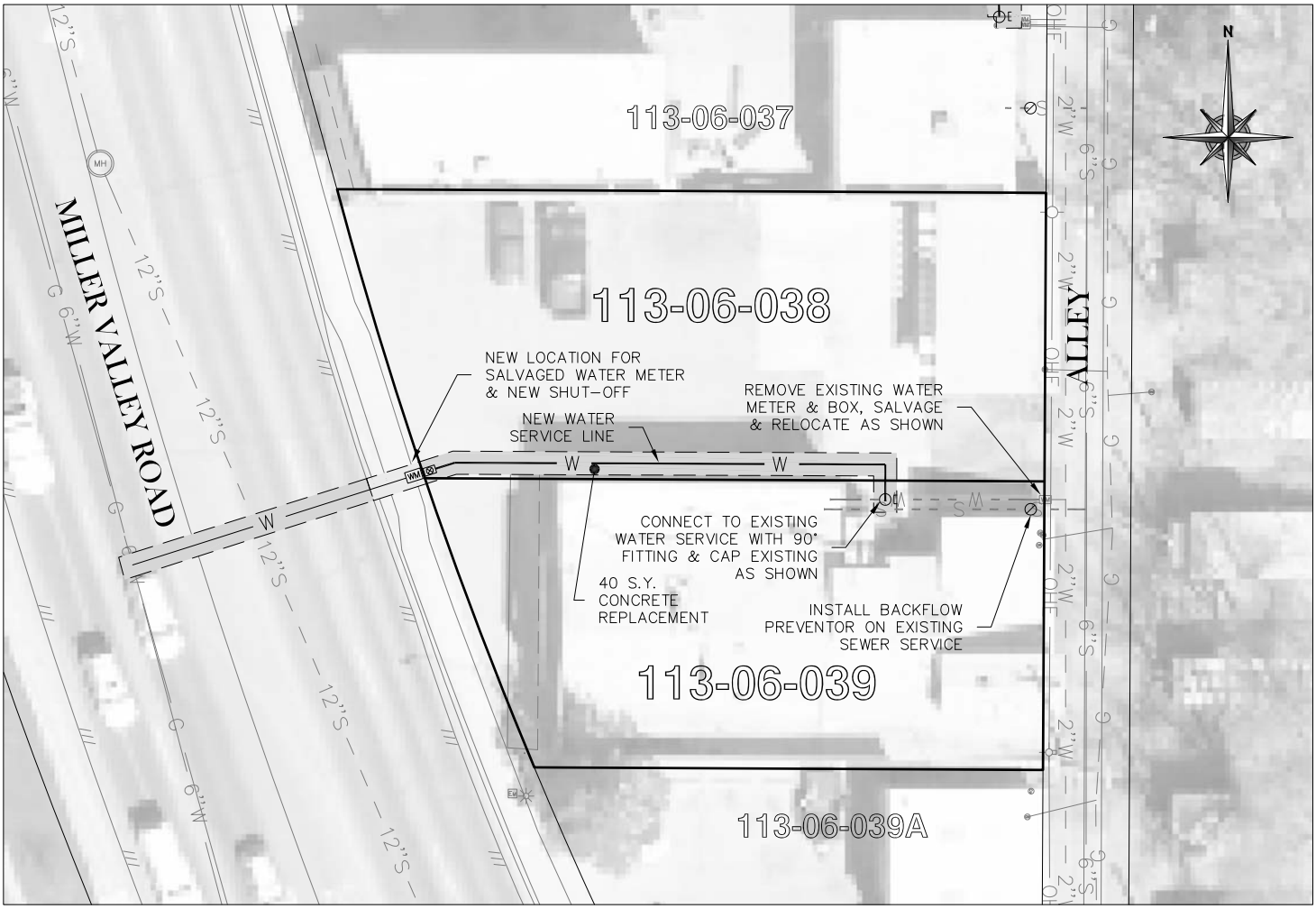

I, _____, the owner's agent or the owner of record, for the structure located at: _____.

By signing this document I agree to the proposed rerouting for my water service from the building to the new main as shown. I also understand & agree to the installation of a sewer backflow device as shown.

SIGNED COPY ON FILE AT
GRANITE BASIN ENGINEERING, INC.

Owner Name	Owner Signature	Date

SP-#42

EXHIBIT 'A'

CITY OF PRESCOTT
COMMUNITY DEVELOPMENT DEPARTMENT
BUILDING SAFETY DIVISION

PLOT PLAN SKETCH

Building Permit #: Job Address: 701 705 & 709 MILLER VALLEY RD

Scale: 1" = 40' Assessor's Parcel Number: 113-06-039A Meter Number: 1531-3314

Approved by: City of Prescott Building Division _____ Approved by: City of Prescott Engineering _____

1. It is the responsibility of the owner or contractor to field verify ALL UTILITY MAINS prior to construction.
2. Any improvement in City right-of-way requires permit issued by City Engineering Department per Ordinance #1338.
3. No structure shall encroach onto any easement or right-of-way. Driveway entrance may require dip section or minimum 12 inch corrugated metal pipe.
4. DO NOT ALTER SIDEWALK. SIDEWALK MUST MEET AMERICANS WITH DISABILITIES ACT (ADA) STANDARDS.
5. All mailbox installations must be to City of Prescott standard detail 1-08. Any deviation must be specially permitted by the Engineering Department.
6. Approval of the Planning & Zoning Department is subject to all other easements, encumbrances, etc. or restriction which may apply to said property by virtue of any City Ordinances and/or state law and deed restrictions. The City takes no responsibility for said restrictions or requirements and the burden to comply with such restrictions lies solely with the property owner and/or applicant.

I, _____, the owner's agent or the owner of record, for the structure located at: _____.

By signing this document I agree to the proposed rerouting for my water service from the building to the new main as shown. I also understand & agree to the installation of a sewer backflow device as shown.

_____ _____ _____

Owner Name **Owner Signature** **Date**

SP-#43

EXHIBIT 'A'

CITY OF PRESCOTT
COMMUNITY DEVELOPMENT DEPARTMENT
BUILDING SAFETY DIVISION

PLOT PLAN SKETCH

Building Permit #: Job Address: 736 DIVISION ST

Scale: 1" = 30' Assessor's Parcel Number: 113-06-040 Meter Number: 1523-2054

Approved by: City of Prescott Building Division _____ Approved by: City of Prescott Engineering _____

1. It is the responsibility of the owner or contractor to field verify ALL UTILITY MAINS prior to construction.
2. Any improvement in City right-of-way requires permit issued by City Engineering Department per Ordinance #1338.
3. No structure shall encroach onto any easement or right-of-way. Driveway entrance may require dip section or minimum 12 inch corrugated metal pipe.
4. DO NOT ALTER SIDEWALK. SIDEWALK MUST MEET AMERICANS WITH DISABILITIES ACT (ADA) STANDARDS.
5. All mailbox installations must be to City of Prescott standard detail 1-08. Any deviation must be specially permitted by the Engineering Department.
6. Approval of the Planning & Zoning Department is subject to all other easements, encumbrances, etc. or restriction which may apply to said property by virtue of any City Ordinances and/or state law and deed restrictions. The City takes no responsibility for said restrictions or requirements and the burden to comply with such restrictions lies solely with the property owner and/or applicant.

I, _____, the owner's agent or the owner of record, for the structure located at: _____.

By signing this document I agree to the proposed rerouting for my water service from the building to the new main as shown. I also understand & agree to the installation of a sewer backflow device as shown.

Owner Name	Owner Signature	Date

SP-#44

EXHIBIT 'A'

CITY OF PRESCOTT
COMMUNITY DEVELOPMENT DEPARTMENT
BUILDING SAFETY DIVISION

PLOT PLAN SKETCH

Building Permit #: Job Address: 729 N WALNUT ST

Scale: 1" = 30' Assessor's Parcel Number: 113-06-041A Meter Number: 1533-2030

Approved by: City of Prescott Building Division _____ Approved by: City of Prescott Engineering _____

1. It is the responsibility of the owner or contractor to field verify ALL UTILITY MAINS prior to construction.
2. Any improvement in City right-of-way requires permit issued by City Engineering Department per Ordinance #1338.
3. No structure shall encroach onto any easement or right-of-way. Driveway entrance may require dip section or minimum 12 inch corrugated metal pipe.
4. DO NOT ALTER SIDEWALK. SIDEWALK MUST MEET AMERICANS WITH DISABILITIES ACT (ADA) STANDARDS.
5. All mailbox installations must be to City of Prescott standard detail 1-08. Any deviation must be specially permitted by the Engineering Department.
6. Approval of the Planning & Zoning Department is subject to all other easements, encumbrances, etc. or restriction which may apply to said property by virtue of any City Ordinances and/or state law and deed restrictions. The City takes no responsibility for said restrictions or requirements and the burden to comply with such restrictions lies solely with the property owner and/or applicant.

I, _____, the owner's agent or the owner of record, for the structure located at: _____.

By signing this document I agree to the proposed rerouting for my water service from the building to the new main as shown. I also understand & agree to the installation of a sewer backflow device as shown.

_____ _____ _____

Owner Name **Owner Signature** **Date**

SP-#45

EXHIBIT 'A'

CITY OF PRESCOTT
COMMUNITY DEVELOPMENT DEPARTMENT
BUILDING SAFETY DIVISION

PLOT PLAN SKETCH

Building Permit #: Job Address: 725 N WALNUT ST

Scale: 1" = 30' Assessor's Parcel Number: 113-06-041C Meter Number: 1533-2052

Approved by: City of Prescott Building Division _____ Approved by: City of Prescott Engineering _____

1. It is the responsibility of the owner or contractor to field verify ALL UTILITY MAINS prior to construction.
2. Any improvement in City right-of-way requires permit issued by City Engineering Department per Ordinance #1338.
3. No structure shall encroach onto any easement or right-of-way. Driveway entrance may require dip section or minimum 12 inch corrugated metal pipe.
4. DO NOT ALTER SIDEWALK. SIDEWALK MUST MEET AMERICANS WITH DISABILITIES ACT (ADA) STANDARDS.
5. All mailbox installations must be to City of Prescott standard detail 1-08. Any deviation must be specially permitted by the Engineering Department.
6. Approval of the Planning & Zoning Department is subject to all other easements, encumbrances, etc. or restriction which may apply to said property by virtue of any City Ordinances and/or state law and deed restrictions. The City takes no responsibility for said restrictions or requirements and the burden to comply with such restrictions lies solely with the property owner and/or applicant.

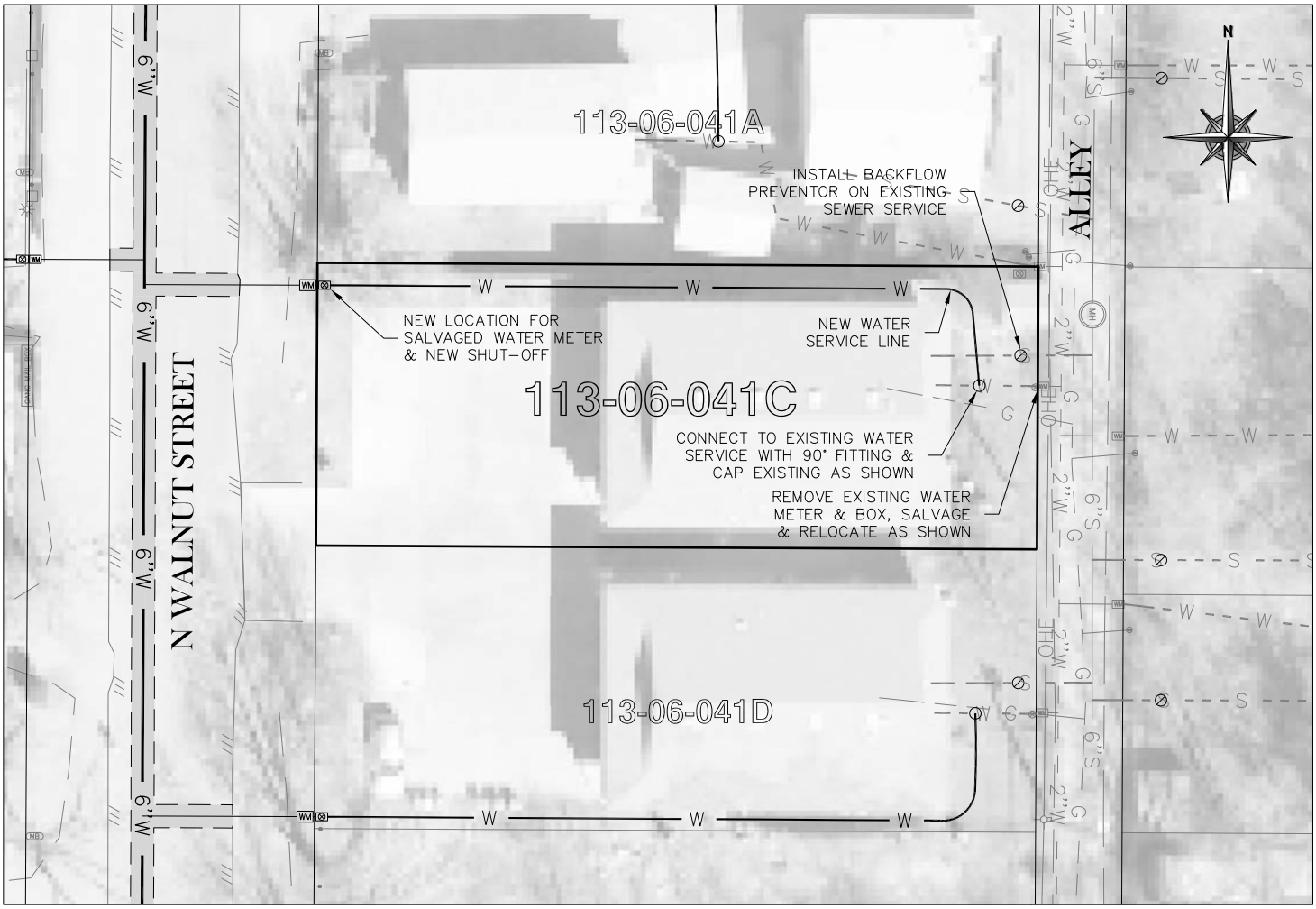

I, _____, the owner's agent or the owner of record, for the structure located at: _____.

By signing this document I agree to the proposed rerouting for my water service from the building to the new main as shown. I also understand & agree to the installation of a sewer backflow device as shown.

Owner Name	Owner Signature	Date

SP-#46

EXHIBIT 'A'

CITY OF PRESCOTT
COMMUNITY DEVELOPMENT DEPARTMENT
BUILDING SAFETY DIVISION

PLOT PLAN SKETCH

Building Permit #: Job Address: 721 N WALNUT ST

Scale: 1 inch = 30 ft. Assessor's Parcel Number: 113-06-041D Meter Number: 1533-2055

Approved by: City of Prescott Building Division _____ Approved by: City of Prescott Engineering _____

1. It is the responsibility of the owner or contractor to field verify ALL UTILITY MAINS prior to construction.
2. Any improvement in City right-of-way requires permit issued by City Engineering Department per Ordinance #1338.
3. No structure shall encroach onto any easement or right-of-way. Driveway entrance may require dip section or minimum 12 inch corrugated metal pipe.
4. DO NOT ALTER SIDEWALK. SIDEWALK MUST MEET AMERICANS WITH DISABILITIES ACT (ADA) STANDARDS.
5. All mailbox installations must be to City of Prescott standard detail 1-08. Any deviation must be specially permitted by the Engineering Department.
6. Approval of the Planning & Zoning Department is subject to all other easements, encumbrances, etc. or restriction which may apply to said property by virtue of any City Ordinances and/or state law and deed restrictions. The City takes no responsibility for said restrictions or requirements and the burden to comply with such restrictions lies solely with the property owner and/or applicant.

I, _____, the owner's agent or the owner of record, for the structure located at: _____.

By signing this document I agree to the proposed rerouting for my water service from the building to the new main as shown. I also understand & agree to the installation of a sewer backflow device as shown.

Owner Name _____ **Owner Signature** _____ **Date** _____

SP-#47

EXHIBIT 'A'

CITY OF PRESCOTT
COMMUNITY DEVELOPMENT DEPARTMENT
BUILDING SAFETY DIVISION

PLOT PLAN SKETCH

Building Permit #: Job Address: 734 DIVISION ST

Scale: 1" = 30' Assessor's Parcel Number: 113-06-042 Meter Number: 1533-2028

Approved by: City of Prescott Building Division _____ Approved by: City of Prescott Engineering _____

1. It is the responsibility of the owner or contractor to field verify ALL UTILITY MAINS prior to construction.
2. Any improvement in City right-of-way requires permit issued by City Engineering Department per Ordinance #1338.
3. No structure shall encroach onto any easement or right-of-way. Driveway entrance may require dip section or minimum 12 inch corrugated metal pipe.
4. DO NOT ALTER SIDEWALK. SIDEWALK MUST MEET AMERICANS WITH DISABILITIES ACT (ADA) STANDARDS.
5. All mailbox installations must be to City of Prescott standard detail 1-08. Any deviation must be specially permitted by the Engineering Department.
6. Approval of the Planning & Zoning Department is subject to all other easements, encumbrances, etc. or restriction which may apply to said property by virtue of any City Ordinances and/or state law and deed restrictions. The City takes no responsibility for said restrictions or requirements and the burden to comply with such restrictions lies solely with the property owner and/or applicant.

I, _____, the owner's agent or the owner of record, for the structure located at: _____.

By signing this document I agree to the proposed rerouting for my water service from the building to the new main as shown. I also understand & agree to the installation of a sewer backflow device as shown.

Owner Name _____ **Owner Signature** _____ **Date** _____

SP-#48

EXHIBIT 'A'

CITY OF PRESCOTT
COMMUNITY DEVELOPMENT DEPARTMENT
BUILDING SAFETY DIVISION

PLOT PLAN SKETCH

Building Permit #: Job Address: 732 DIVISION ST

Scale: 1" = 30' Assessor's Parcel Number: 113-06-043 Meter Number: 2019-0461

Approved by: City of Prescott Building Division _____ Approved by: City of Prescott Engineering _____

1. It is the responsibility of the owner or contractor to field verify ALL UTILITY MAINS prior to construction.
2. Any improvement in City right-of-way requires permit issued by City Engineering Department per Ordinance #1338.
3. No structure shall encroach onto any easement or right-of-way. Driveway entrance may require dip section or minimum 12 inch corrugated metal pipe.
4. DO NOT ALTER SIDEWALK. SIDEWALK MUST MEET AMERICANS WITH DISABILITIES ACT (ADA) STANDARDS.
5. All mailbox installations must be to City of Prescott standard detail 1-08. Any deviation must be specially permitted by the Engineering Department.
6. Approval of the Planning & Zoning Department is subject to all other easements, encumbrances, etc. or restriction which may apply to said property by virtue of any City Ordinances and/or state law and deed restrictions. The City takes no responsibility for said restrictions or requirements and the burden to comply with such restrictions lies solely with the property owner and/or applicant.

I, _____, the owner's agent or the owner of record, for the structure located at: _____.

By signing this document I agree to the proposed rerouting for my water service from the building to the new main as shown. I also understand & agree to the installation of a sewer backflow device as shown.

Owner Name **Owner Signature** **Date**

SP-#49

EXHIBIT 'A'

CITY OF PRESCOTT
COMMUNITY DEVELOPMENT DEPARTMENT
BUILDING SAFETY DIVISION

PLOT PLAN SKETCH

Building Permit #: Job Address: 730 1/2 DIVISION ST

Scale: 1" = 30' Assessor's Parcel Number: 113-06-044 Meter Number: 1533-2079

Approved by: City of Prescott Building Division _____ Approved by: City of Prescott Engineering _____

1. It is the responsibility of the owner or contractor to field verify ALL UTILITY MAINS prior to construction.
2. Any improvement in City right-of-way requires permit issued by City Engineering Department per Ordinance #1338.
3. No structure shall encroach onto any easement or right-of-way. Driveway entrance may require dip section or minimum 12 inch corrugated metal pipe.
4. DO NOT ALTER SIDEWALK. SIDEWALK MUST MEET AMERICANS WITH DISABILITIES ACT (ADA) STANDARDS.
5. All mailbox installations must be to City of Prescott standard detail 1-08. Any deviation must be specially permitted by the Engineering Department.
6. Approval of the Planning & Zoning Department is subject to all other easements, encumbrances, etc. or restriction which may apply to said property by virtue of any City Ordinances and/or state law and deed restrictions. The City takes no responsibility for said restrictions or requirements and the burden to comply with such restrictions lies solely with the property owner and/or applicant.

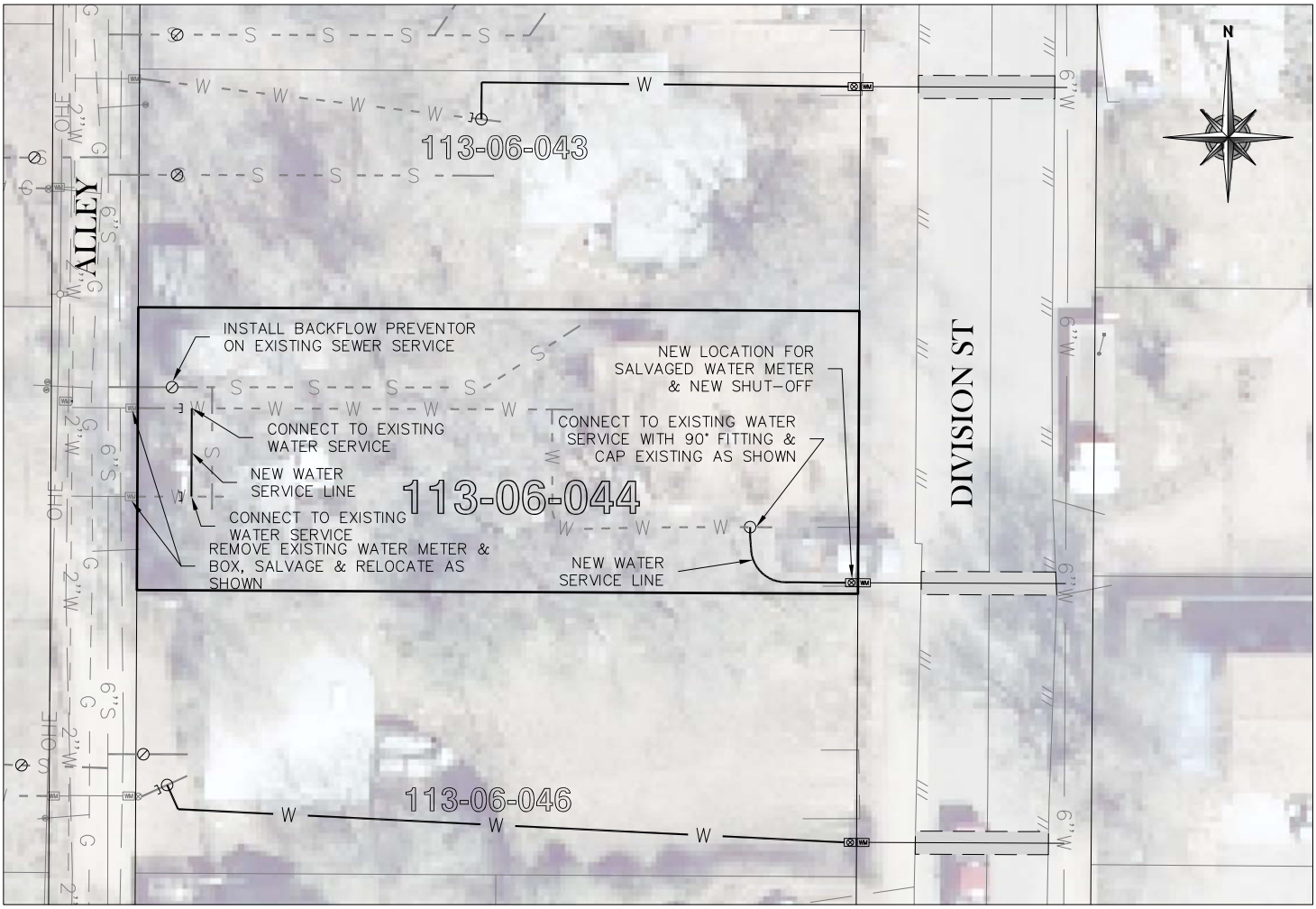

I, _____, the owner's agent or the owner of record, for the structure located at: _____.

By signing this document I agree to the proposed rerouting for my water service from the building to the new main as shown. I also understand & agree to the installation of a sewer backflow device as shown.

Owner Name	Owner Signature	Date

SP-#50

EXHIBIT 'A'

CITY OF PRESCOTT
COMMUNITY DEVELOPMENT DEPARTMENT
BUILDING SAFETY DIVISION

PLOT PLAN SKETCH

Building Permit #: Job Address: 715 & 717 N WALNUT ST

Scale: 1" = 30' Assessor's Parcel Number: 113-06-045 Meter Number: 1533-2026 & 1533-2122

Approved by: City of Prescott Building Division _____ Approved by: City of Prescott Engineering _____

1. It is the responsibility of the owner or contractor to field verify ALL UTILITY MAINS prior to construction.
2. Any improvement in City right-of-way requires permit issued by City Engineering Department per Ordinance #1338.
3. No structure shall encroach onto any easement or right-of-way. Driveway entrance may require dip section or minimum 12 inch corrugated metal pipe.
4. DO NOT ALTER SIDEWALK. SIDEWALK MUST MEET AMERICANS WITH DISABILITIES ACT (ADA) STANDARDS.
5. All mailbox installations must be to City of Prescott standard detail 1-08. Any deviation must be specially permitted by the Engineering Department.
6. Approval of the Planning & Zoning Department is subject to all other easements, encumbrances, etc. or restriction which may apply to said property by virtue of any City Ordinances and/or state law and deed restrictions. The City takes no responsibility for said restrictions or requirements and the burden to comply with such restrictions lies solely with the property owner and/or applicant.

I, _____, the owner's agent or the owner of record, for the structure located at: _____.

By signing this document I agree to the proposed rerouting for my water service from the building to the new main as shown. I also understand & agree to the installation of a sewer backflow device as shown.

Owner Name _____ **Owner Signature** _____ **Date** _____

SP-#51

EXHIBIT 'A'

CITY OF PRESCOTT
COMMUNITY DEVELOPMENT DEPARTMENT
BUILDING SAFETY DIVISION

PLOT PLAN SKETCH

Building Permit #: Job Address: 728 DIVISION ST

Scale: 1" = 30' Assessor's Parcel Number: 113-06-046 Meter Number: 1533-2031

Approved by: City of Prescott Building Division _____ Approved by: City of Prescott Engineering _____

1. It is the responsibility of the owner or contractor to field verify ALL UTILITY MAINS prior to construction.
2. Any improvement in City right-of-way requires permit issued by City Engineering Department per Ordinance #1338.
3. No structure shall encroach onto any easement or right-of-way. Driveway entrance may require dip section or minimum 12 inch corrugated metal pipe.
4. DO NOT ALTER SIDEWALK. SIDEWALK MUST MEET AMERICANS WITH DISABILITIES ACT (ADA) STANDARDS.
5. All mailbox installations must be to City of Prescott standard detail 1-08. Any deviation must be specially permitted by the Engineering Department.
6. Approval of the Planning & Zoning Department is subject to all other easements, encumbrances, etc. or restriction which may apply to said property by virtue of any City Ordinances and/or state law and deed restrictions. The City takes no responsibility for said restrictions or requirements and the burden to comply with such restrictions lies solely with the property owner and/or applicant.

I, _____, the owner's agent or the owner of record, for the structure located at: _____.

By signing this document I agree to the proposed rerouting for my water service from the building to the new main as shown. I also understand & agree to the installation of a sewer backflow device as shown.

Owner Name	Owner Signature	Date

SP-#52

EXHIBIT 'A'

CITY OF PRESCOTT
COMMUNITY DEVELOPMENT DEPARTMENT
BUILDING SAFETY DIVISION

PLOT PLAN SKETCH

Building Permit #: Job Address: 720 W HILLSIDE AVE

Scale: 1" = 30' Assessor's Parcel Number: 113-06-048 Meter Number: 1533-2075

Approved by: City of Prescott Building Division _____ Approved by: City of Prescott Engineering _____

1. It is the responsibility of the owner or contractor to field verify ALL UTILITY MAINS prior to construction.
2. Any improvement in City right-of-way requires permit issued by City Engineering Department per Ordinance #1338.
3. No structure shall encroach onto any easement or right-of-way. Driveway entrance may require dip section or minimum 12 inch corrugated metal pipe.
4. DO NOT ALTER SIDEWALK. SIDEWALK MUST MEET AMERICANS WITH DISABILITIES ACT (ADA) STANDARDS.
5. All mailbox installations must be to City of Prescott standard detail 1-08. Any deviation must be specially permitted by the Engineering Department.
6. Approval of the Planning & Zoning Department is subject to all other easements, encumbrances, etc. or restriction which may apply to said property by virtue of any City Ordinances and/or state law and deed restrictions. The City takes no responsibility for said restrictions or requirements and the burden to comply with such restrictions lies solely with the property owner and/or applicant.

I, _____, the owner's agent or the owner of record, for the structure located at: _____.

By signing this document I agree to the proposed rerouting for my water service from the building to the new main as shown. I also understand & agree to the installation of a sewer backflow device as shown.

Owner Name	Owner Signature	Date

SP-#53

EXHIBIT 'A'

CITY OF PRESCOTT
COMMUNITY DEVELOPMENT DEPARTMENT
BUILDING SAFETY DIVISION

PLOT PLAN SKETCH

Building Permit #: Job Address: 713 N WALNUT ST

Scale: 1 inch = 30 ft. Assessor's Parcel Number: 113-06-049 Meter Number: 1533-2078

Approved by: City of Prescott Building Division _____ Approved by: City of Prescott Engineering _____

1. It is the responsibility of the owner or contractor to field verify ALL UTILITY MAINS prior to construction.
2. Any improvement in City right-of-way requires permit issued by City Engineering Department per Ordinance #1338.
3. No structure shall encroach onto any easement or right-of-way. Driveway entrance may require dip section or minimum 12 inch corrugated metal pipe.
4. DO NOT ALTER SIDEWALK. SIDEWALK MUST MEET AMERICANS WITH DISABILITIES ACT (ADA) STANDARDS.
5. All mailbox installations must be to City of Prescott standard detail 1-08. Any deviation must be specially permitted by the Engineering Department.
6. Approval of the Planning & Zoning Department is subject to all other easements, encumbrances, etc. or restriction which may apply to said property by virtue of any City Ordinances and/or state law and deed restrictions. The City takes no responsibility for said restrictions or requirements and the burden to comply with such restrictions lies solely with the property owner and/or applicant.

I, _____, the owner's agent or the owner of record, for the structure located at: _____.

By signing this document I agree to the proposed rerouting for my water service from the building to the new main as shown. I also understand & agree to the installation of a sewer backflow device as shown.

Owner Name	Owner Signature	Date

SP-#54

EXHIBIT 'A'

CITY OF PRESCOTT
COMMUNITY DEVELOPMENT DEPARTMENT
BUILDING SAFETY DIVISION

PLOT PLAN SKETCH

Building Permit #: Job Address: 703 N WALNUT ST

Scale: 1 inch = 30 ft. Assessor's Parcel Number: 113-06-050 Meter Number: 2019-0463

Approved by: City of Prescott Building Division _____ Approved by: City of Prescott Engineering _____

1. It is the responsibility of the owner or contractor to field verify ALL UTILITY MAINS prior to construction.
2. Any improvement in City right-of-way requires permit issued by City Engineering Department per Ordinance #1338.
3. No structure shall encroach onto any easement or right-of-way. Driveway entrance may require dip section or minimum 12 inch corrugated metal pipe.
4. DO NOT ALTER SIDEWALK. SIDEWALK MUST MEET AMERICANS WITH DISABILITIES ACT (ADA) STANDARDS.
5. All mailbox installations must be to City of Prescott standard detail 1-08. Any deviation must be specially permitted by the Engineering Department.
6. Approval of the Planning & Zoning Department is subject to all other easements, encumbrances, etc. or restriction which may apply to said property by virtue of any City Ordinances and/or state law and deed restrictions. The City takes no responsibility for said restrictions or requirements and the burden to comply with such restrictions lies solely with the property owner and/or applicant.

I, _____, the owner's agent or the owner of record, for the structure located at: _____.

By signing this document I agree to the proposed rerouting for my water service from the building to the new main as shown. I also understand & agree to the installation of a sewer backflow device as shown.

_____ _____ _____

Owner Name **Owner Signature** **Date**

SP-#55

EXHIBIT 'A'

CITY OF PRESCOTT
COMMUNITY DEVELOPMENT DEPARTMENT
BUILDING SAFETY DIVISION

PLOT PLAN SKETCH

Building Permit #: Job Address: 749 Miller Valley Rd

Scale: 1" = 40' Assessor's Parcel Number: 113-06-051 Meter Number: 2019-1029

Approved by: City of Prescott Building Division _____ Approved by: City of Prescott Engineering _____

1. It is the responsibility of the owner or contractor to field verify ALL UTILITY MAINS prior to construction.
2. Any improvement in City right-of-way requires permit issued by City Engineering Department per Ordinance #1338.
3. No structure shall encroach onto any easement or right-of-way. Driveway entrance may require dip section or minimum 12 inch corrugated metal pipe.
4. DO NOT ALTER SIDEWALK. SIDEWALK MUST MEET AMERICANS WITH DISABILITIES ACT (ADA) STANDARDS.
5. All mailbox installations must be to City of Prescott standard detail 1-08. Any deviation must be specially permitted by the Engineering Department.
6. Approval of the Planning & Zoning Department is subject to all other easements, encumbrances, etc. or restriction which may apply to said property by virtue of any City Ordinances and/or state law and deed restrictions. The City takes no responsibility for said restrictions or requirements and the burden to comply with such restrictions lies solely with the property owner and/or applicant.

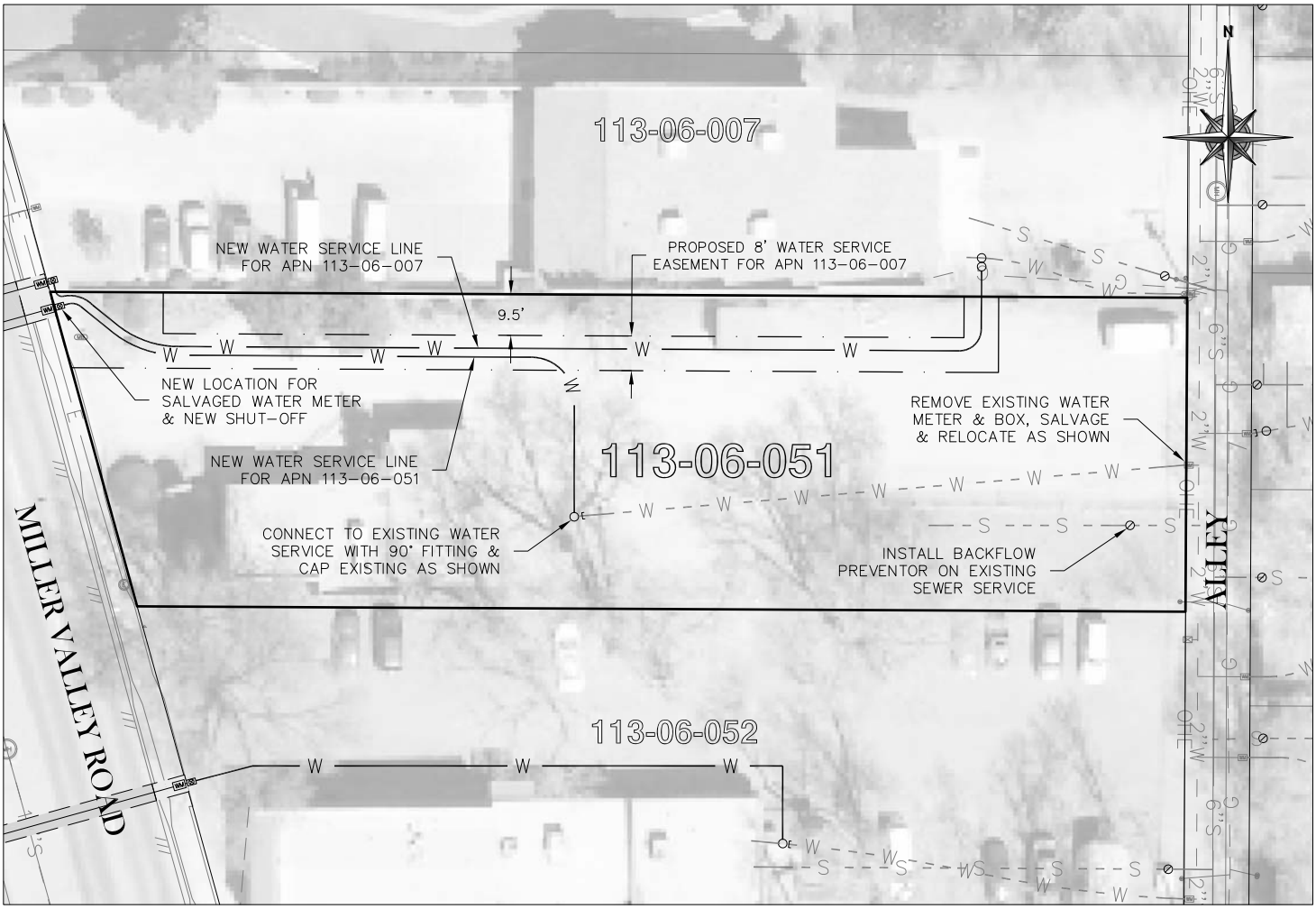

I, _____, the owner's agent or the owner of record, for the structure located at: _____.

By signing this document I agree to the proposed rerouting for my water service from the building to the new main as shown. I also understand & agree to the installation of a sewer backflow device as shown.

_____ _____ _____

Owner Name **Owner Signature** **Date**

SP-#56

EXHIBIT 'A'

CITY OF PRESCOTT
COMMUNITY DEVELOPMENT DEPARTMENT
BUILDING SAFETY DIVISION

PLOT PLAN SKETCH

Building Permit #: Job Address: 801 Miller Valley Rd

Scale: 1" = 40' Assessor's Parcel Number: 113-06-052 Meter Number: 2020-9664

Approved by: City of Prescott Building Division _____ Approved by: City of Prescott Engineering _____

1. It is the responsibility of the owner or contractor to field verify ALL UTILITY MAINS prior to construction.
2. Any improvement in City right-of-way requires permit issued by City Engineering Department per Ordinance #1338.
3. No structure shall encroach onto any easement or right-of-way. Driveway entrance may require dip section or minimum 12 inch corrugated metal pipe.
4. DO NOT ALTER SIDEWALK. SIDEWALK MUST MEET AMERICANS WITH DISABILITIES ACT (ADA) STANDARDS.
5. All mailbox installations must be to City of Prescott standard detail 1-08. Any deviation must be specially permitted by the Engineering Department.
6. Approval of the Planning & Zoning Department is subject to all other easements, encumbrances, etc. or restriction which may apply to said property by virtue of any City Ordinances and/or state law and deed restrictions. The City takes no responsibility for said restrictions or requirements and the burden to comply with such restrictions lies solely with the property owner and/or applicant.

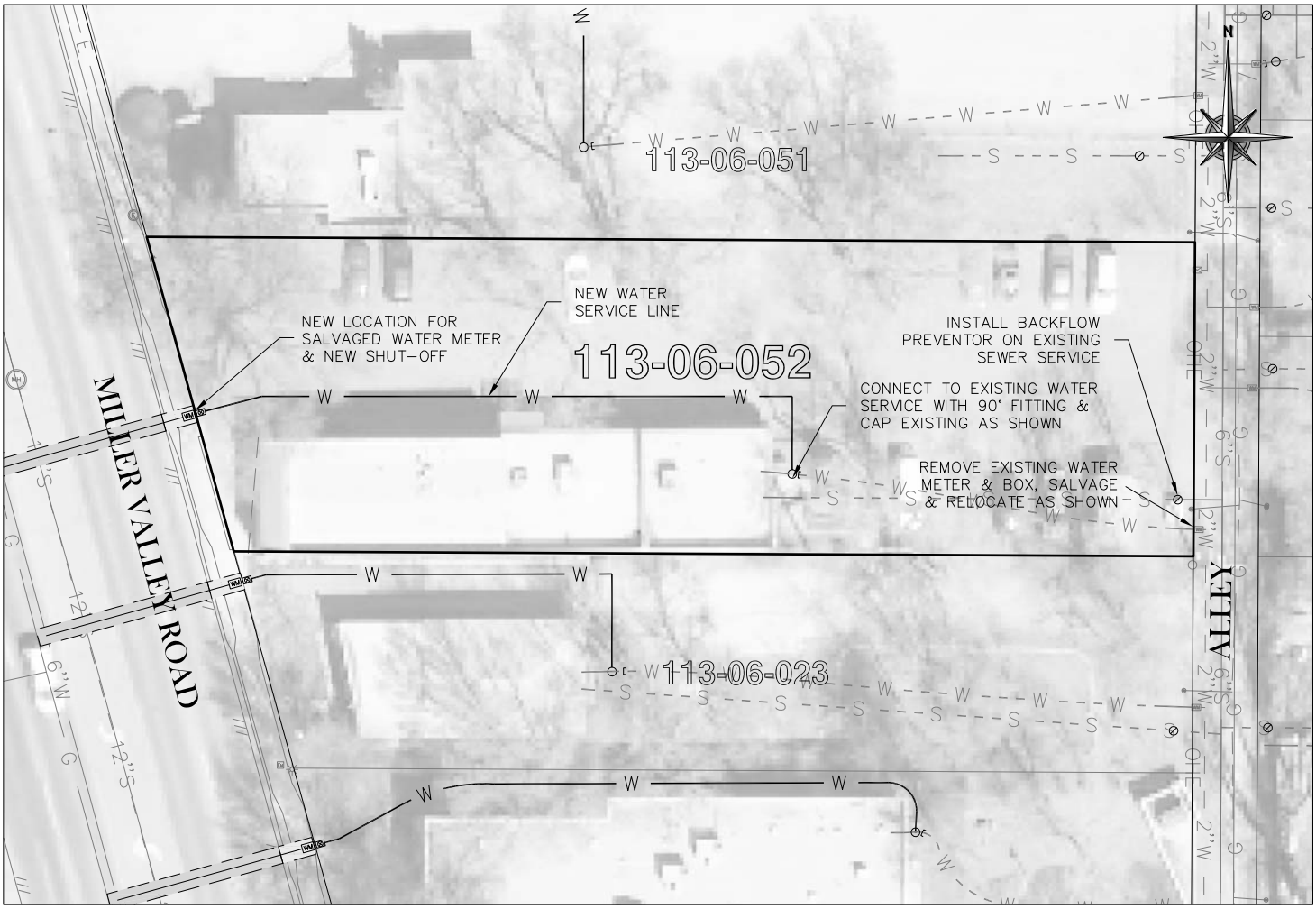

I, _____, the owner's agent or the owner of record, for the structure located at: _____.

By signing this document I agree to the proposed rerouting for my water service from the building to the new main as shown. I also understand & agree to the installation of a sewer backflow device as shown.

Owner Name _____ **Owner Signature** _____ **Date** _____

SP-#57

EXHIBIT 'A'

CITY OF PRESCOTT
COMMUNITY DEVELOPMENT DEPARTMENT
BUILDING SAFETY DIVISION

PLOT PLAN SKETCH

Building Permit #: Job Address: 815 WHIPPLE ST

Scale: 1" = 100' Assessor's Parcel Number: 113-06-066C & 067B Meter Number: 1533-2119

Approved by: City of Prescott Building Division _____ Approved by: City of Prescott Engineering _____

1. It is the responsibility of the owner or contractor to field verify ALL UTILITY MAINS prior to construction.
2. Any improvement in City right-of-way requires permit issued by City Engineering Department per Ordinance #1338.
3. No structure shall encroach onto any easement or right-of-way. Driveway entrance may require dip section or minimum 12 inch corrugated metal pipe.
4. DO NOT ALTER SIDEWALK. SIDEWALK MUST MEET AMERICANS WITH DISABILITIES ACT (ADA) STANDARDS.
5. All mailbox installations must be to City of Prescott standard detail 1-08. Any deviation must be specially permitted by the Engineering Department.
6. Approval of the Planning & Zoning Department is subject to all other easements, encumbrances, etc. or restriction which may apply to said property by virtue of any City Ordinances and/or state law and deed restrictions. The City takes no responsibility for said restrictions or requirements and the burden to comply with such restrictions lies solely with the property owner and/or applicant.

I, _____, the owner's agent or the owner of record, for the structure located at: _____.

By signing this document I agree to the proposed rerouting for my water service from the building to the new main as shown. I also understand & agree to the installation of a sewer backflow device as shown.

_____ _____ _____

Owner Name **Owner Signature** **Date**

SP-#58

EXHIBIT 'A'

CITY OF PRESCOTT
COMMUNITY DEVELOPMENT DEPARTMENT
BUILDING SAFETY DIVISION

PLOT PLAN SKETCH

Building Permit #: Job Address: 840 N WALNUT ST

Scale: 1" = 30' Assessor's Parcel Number: 113-06-068 Meter Number: 1533-2111

Approved by: City of Prescott Building Division _____ Approved by: City of Prescott Engineering _____

1. It is the responsibility of the owner or contractor to field verify ALL UTILITY MAINS prior to construction.
2. Any improvement in City right-of-way requires permit issued by City Engineering Department per Ordinance #1338.
3. No structure shall encroach onto any easement or right-of-way. Driveway entrance may require dip section or minimum 12 inch corrugated metal pipe.
4. DO NOT ALTER SIDEWALK. SIDEWALK MUST MEET AMERICANS WITH DISABILITIES ACT (ADA) STANDARDS.
5. All mailbox installations must be to City of Prescott standard detail 1-08. Any deviation must be specially permitted by the Engineering Department.
6. Approval of the Planning & Zoning Department is subject to all other easements, encumbrances, etc. or restriction which may apply to said property by virtue of any City Ordinances and/or state law and deed restrictions. The City takes no responsibility for said restrictions or requirements and the burden to comply with such restrictions lies solely with the property owner and/or applicant.

I, _____, the owner's agent or the owner of record, for the structure located at: _____.

By signing this document I agree to the proposed rerouting for my water service from the building to the new main as shown. I also understand & agree to the installation of a sewer backflow device as shown.

Owner Name _____ **Owner Signature** _____ **Date** _____

SP-#59

EXHIBIT 'A'

CITY OF PRESCOTT
COMMUNITY DEVELOPMENT DEPARTMENT
BUILDING SAFETY DIVISION

PLOT PLAN SKETCH

Building Permit #: Job Address: 837 N WALNUT ST

Scale: 1" = 30' Assessor's Parcel Number: 113-06-069 Meter Number: 1531-3279

Approved by: City of Prescott Building Division _____ Approved by: City of Prescott Engineering _____

1. It is the responsibility of the owner or contractor to field verify ALL UTILITY MAINS prior to construction.
2. Any improvement in City right-of-way requires permit issued by City Engineering Department per Ordinance #1338.
3. No structure shall encroach onto any easement or right-of-way. Driveway entrance may require dip section or minimum 12 inch corrugated metal pipe.
4. DO NOT ALTER SIDEWALK. SIDEWALK MUST MEET AMERICANS WITH DISABILITIES ACT (ADA) STANDARDS.
5. All mailbox installations must be to City of Prescott standard detail 1-08. Any deviation must be specially permitted by the Engineering Department.
6. Approval of the Planning & Zoning Department is subject to all other easements, encumbrances, etc. or restriction which may apply to said property by virtue of any City Ordinances and/or state law and deed restrictions. The City takes no responsibility for said restrictions or requirements and the burden to comply with such restrictions lies solely with the property owner and/or applicant.

I, _____, the owner's agent or the owner of record, for the structure located at: _____.

By signing this document I agree to the proposed rerouting for my water service from the building to the new main as shown. I also understand & agree to the installation of a sewer backflow device as shown.

_____ _____ _____

Owner Name **Owner Signature** **Date**

SP-#60

EXHIBIT 'A'

CITY OF PRESCOTT
COMMUNITY DEVELOPMENT DEPARTMENT
BUILDING SAFETY DIVISION

PLOT PLAN SKETCH

Building Permit #: Job Address: 805 WHIPPLE ST & 847 N WALNUT ST

Scale: 1" = 40' Assessor's Parcel Number: 113-06-070 & 071 Meter Number: 2052-6052 & 1654-2320

Approved by: City of Prescott Building Division _____ Approved by: City of Prescott Engineering _____

1. It is the responsibility of the owner or contractor to field verify ALL UTILITY MAINS prior to construction.
2. Any improvement in City right-of-way requires permit issued by City Engineering Department per Ordinance #1338.
3. No structure shall encroach onto any easement or right-of-way. Driveway entrance may require dip section or minimum 12 inch corrugated metal pipe.
4. DO NOT ALTER SIDEWALK. SIDEWALK MUST MEET AMERICANS WITH DISABILITIES ACT (ADA) STANDARDS.
5. All mailbox installations must be to City of Prescott standard detail 1-08. Any deviation must be specially permitted by the Engineering Department.
6. Approval of the Planning & Zoning Department is subject to all other easements, encumbrances, etc. or restriction which may apply to said property by virtue of any City Ordinances and/or state law and deed restrictions. The City takes no responsibility for said restrictions or requirements and the burden to comply with such restrictions lies solely with the property owner and/or applicant.

I, _____, the owner's agent or the owner of record, for the structure located at: _____.

By signing this document I agree to the proposed rerouting for my water service from the building to the new main as shown. I also understand & agree to the installation of a sewer backflow device as shown.

SIGNED COPY ON FILE AT
GRANITE BASIN ENGINEERING, INC.

Owner Name	Owner Signature	Date

SP-#61

EXHIBIT 'A'

CITY OF PRESCOTT
COMMUNITY DEVELOPMENT DEPARTMENT
BUILDING SAFETY DIVISION

PLOT PLAN SKETCH

Building Permit #: Job Address: 747 WHIPPLE ST

Scale: 1" = 30' Assessor's Parcel Number: 113-06-072 Meter Number: 1531-3273

Approved by: City of Prescott Building Division _____ Approved by: City of Prescott Engineering _____

1. It is the responsibility of the owner or contractor to field verify ALL UTILITY MAINS prior to construction.
2. Any improvement in City right-of-way requires permit issued by City Engineering Department per Ordinance #1338.
3. No structure shall encroach onto any easement or right-of-way. Driveway entrance may require dip section or minimum 12 inch corrugated metal pipe.
4. DO NOT ALTER SIDEWALK. SIDEWALK MUST MEET AMERICANS WITH DISABILITIES ACT (ADA) STANDARDS.
5. All mailbox installations must be to City of Prescott standard detail 1-08. Any deviation must be specially permitted by the Engineering Department.
6. Approval of the Planning & Zoning Department is subject to all other easements, encumbrances, etc. or restriction which may apply to said property by virtue of any City Ordinances and/or state law and deed restrictions. The City takes no responsibility for said restrictions or requirements and the burden to comply with such restrictions lies solely with the property owner and/or applicant.

I, _____, the owner's agent or the owner of record, for the structure located at: _____.

By signing this document I agree to the proposed rerouting for my water service from the building to the new main as shown. I also understand & agree to the installation of a sewer backflow device as shown.

Owner Name	Owner Signature	Date

SP-#62

EXHIBIT 'A'

CITY OF PRESCOTT
COMMUNITY DEVELOPMENT DEPARTMENT
BUILDING SAFETY DIVISION

PLOT PLAN SKETCH

Building Permit #: Job Address: 842 DIVISION ST

Scale: 1" = 30' Assessor's Parcel Number: 113-06-073 Meter Number: 1916-8256

Approved by: City of Prescott Building Division _____ Approved by: City of Prescott Engineering _____

1. It is the responsibility of the owner or contractor to field verify ALL UTILITY MAINS prior to construction.
2. Any improvement in City right-of-way requires permit issued by City Engineering Department per Ordinance #1338.
3. No structure shall encroach onto any easement or right-of-way. Driveway entrance may require dip section or minimum 12 inch corrugated metal pipe.
4. DO NOT ALTER SIDEWALK. SIDEWALK MUST MEET AMERICANS WITH DISABILITIES ACT (ADA) STANDARDS.
5. All mailbox installations must be to City of Prescott standard detail 1-08. Any deviation must be specially permitted by the Engineering Department.
6. Approval of the Planning & Zoning Department is subject to all other easements, encumbrances, etc. or restriction which may apply to said property by virtue of any City Ordinances and/or state law and deed restrictions. The City takes no responsibility for said restrictions or requirements and the burden to comply with such restrictions lies solely with the property owner and/or applicant.

I, _____, the owner's agent or the owner of record, for the structure located at: _____.

By signing this document I agree to the proposed rerouting for my water service from the building to the new main as shown. I also understand & agree to the installation of a sewer backflow device as shown.

Owner Name	Owner Signature	Date

SP-#63

EXHIBIT 'A'

CITY OF PRESCOTT
COMMUNITY DEVELOPMENT DEPARTMENT
BUILDING SAFETY DIVISION

PLOT PLAN SKETCH

Building Permit #: Job Address: 840 DIVISION ST

Scale: 1" = 30' Assessor's Parcel Number: 113-06-074 Meter Number: 1531-3277

Approved by: City of Prescott Building Division _____ Approved by: City of Prescott Engineering _____

1. It is the responsibility of the owner or contractor to field verify ALL UTILITY MAINS prior to construction.
2. Any improvement in City right-of-way requires permit issued by City Engineering Department per Ordinance #1338.
3. No structure shall encroach onto any easement or right-of-way. Driveway entrance may require dip section or minimum 12 inch corrugated metal pipe.
4. DO NOT ALTER SIDEWALK. SIDEWALK MUST MEET AMERICANS WITH DISABILITIES ACT (ADA) STANDARDS.
5. All mailbox installations must be to City of Prescott standard detail 1-08. Any deviation must be specially permitted by the Engineering Department.
6. Approval of the Planning & Zoning Department is subject to all other easements, encumbrances, etc. or restriction which may apply to said property by virtue of any City Ordinances and/or state law and deed restrictions. The City takes no responsibility for said restrictions or requirements and the burden to comply with such restrictions lies solely with the property owner and/or applicant.

I, _____, the owner's agent or the owner of record, for the structure located at: _____.

By signing this document I agree to the proposed rerouting for my water service from the building to the new main as shown. I also understand & agree to the installation of a sewer backflow device as shown.

Owner Name	Owner Signature	Date

SP-#64

EXHIBIT 'A'

CITY OF PRESCOTT
COMMUNITY DEVELOPMENT DEPARTMENT
BUILDING SAFETY DIVISION

PLOT PLAN SKETCH

Building Permit #: Job Address: 838 DIVISION ST

Scale: 1" = 30' Assessor's Parcel Number: 113-06-075 Meter Number: 1531-3312

Approved by: City of Prescott Building Division _____ Approved by: City of Prescott Engineering _____

1. It is the responsibility of the owner or contractor to field verify ALL UTILITY MAINS prior to construction.
2. Any improvement in City right-of-way requires permit issued by City Engineering Department per Ordinance #1338.
3. No structure shall encroach onto any easement or right-of-way. Driveway entrance may require dip section or minimum 12 inch corrugated metal pipe.
4. DO NOT ALTER SIDEWALK. SIDEWALK MUST MEET AMERICANS WITH DISABILITIES ACT (ADA) STANDARDS.
5. All mailbox installations must be to City of Prescott standard detail 1-08. Any deviation must be specially permitted by the Engineering Department.
6. Approval of the Planning & Zoning Department is subject to all other easements, encumbrances, etc. or restriction which may apply to said property by virtue of any City Ordinances and/or state law and deed restrictions. The City takes no responsibility for said restrictions or requirements and the burden to comply with such restrictions lies solely with the property owner and/or applicant.

I, _____, the owner's agent or the owner of record, for the structure located at: _____.

By signing this document I agree to the proposed rerouting for my water service from the building to the new main as shown. I also understand & agree to the installation of a sewer backflow device as shown.

Owner Name	Owner Signature	Date

SP-#65

EXHIBIT 'A'

CITY OF PRESCOTT
COMMUNITY DEVELOPMENT DEPARTMENT
BUILDING SAFETY DIVISION

PLOT PLAN SKETCH

Building Permit #: Job Address: 846 DIVISION ST

Scale: 1" = 30' Assessor's Parcel Number: 113-06-077 Meter Number: 1656-2010

Approved by: City of Prescott Building Division _____ Approved by: City of Prescott Engineering _____

1. It is the responsibility of the owner or contractor to field verify ALL UTILITY MAINS prior to construction.
2. Any improvement in City right-of-way requires permit issued by City Engineering Department per Ordinance #1338.
3. No structure shall encroach onto any easement or right-of-way. Driveway entrance may require dip section or minimum 12 inch corrugated metal pipe.
4. DO NOT ALTER SIDEWALK. SIDEWALK MUST MEET AMERICANS WITH DISABILITIES ACT (ADA) STANDARDS.
5. All mailbox installations must be to City of Prescott standard detail 1-08. Any deviation must be specially permitted by the Engineering Department.
6. Approval of the Planning & Zoning Department is subject to all other easements, encumbrances, etc. or restriction which may apply to said property by virtue of any City Ordinances and/or state law and deed restrictions. The City takes no responsibility for said restrictions or requirements and the burden to comply with such restrictions lies solely with the property owner and/or applicant.

I, _____, the owner's agent or the owner of record, for the structure located at: _____.

By signing this document I agree to the proposed rerouting for my water service from the building to the new main as shown. I also understand & agree to the installation of a sewer backflow device as shown.

Owner Name	Owner Signature	Date

SP-#66

EXHIBIT 'A'

CITY OF PRESCOTT
COMMUNITY DEVELOPMENT DEPARTMENT
BUILDING SAFETY DIVISION

PLOT PLAN SKETCH

Building Permit #: Job Address: 566 CAMPBELL ST

Scale: 1" = 30' Assessor's Parcel Number: 113-08-129A Meter Number: N/A

Approved by: City of Prescott Building Division _____ Approved by: City of Prescott Engineering _____

1. It is the responsibility of the owner or contractor to field verify ALL UTILITY MAINS prior to construction.
2. Any improvement in City right-of-way requires permit issued by City Engineering Department per Ordinance #1338.
3. No structure shall encroach onto any easement or right-of-way. Driveway entrance may require dip section or minimum 12 inch corrugated metal pipe.
4. DO NOT ALTER SIDEWALK. SIDEWALK MUST MEET AMERICANS WITH DISABILITIES ACT (ADA) STANDARDS.
5. All mailbox installations must be to City of Prescott standard detail 1-08. Any deviation must be specially permitted by the Engineering Department.
6. Approval of the Planning & Zoning Department is subject to all other easements, encumbrances, etc. or restriction which may apply to said property by virtue of any City Ordinances and/or state law and deed restrictions. The City takes no responsibility for said restrictions or requirements and the burden to comply with such restrictions lies solely with the property owner and/or applicant.

I, _____, the owner's agent or the owner of record, for the structure located at: _____.

By signing this document I agree to the proposed rerouting for my water service from the building to the new main as shown. I also understand & agree to the installation of a sewer backflow device as shown.

_____ _____ _____

Owner Name **Owner Signature** **Date**

SP-#67

EXHIBIT 'A'

CITY OF PRESCOTT
COMMUNITY DEVELOPMENT DEPARTMENT
BUILDING SAFETY DIVISION

PLOT PLAN SKETCH

Building Permit #: Job Address: 568 CAMPBELL ST

Scale: 1" = 30' Assessor's Parcel Number: 113-08-129 Meter Number: N/A

Approved by: City of Prescott Building Division _____ Approved by: City of Prescott Engineering _____

1. It is the responsibility of the owner or contractor to field verify ALL UTILITY MAINS prior to construction.
2. Any improvement in City right-of-way requires permit issued by City Engineering Department per Ordinance #1338.
3. No structure shall encroach onto any easement or right-of-way. Driveway entrance may require dip section or minimum 12 inch corrugated metal pipe.
4. DO NOT ALTER SIDEWALK. SIDEWALK MUST MEET AMERICANS WITH DISABILITIES ACT (ADA) STANDARDS.
5. All mailbox installations must be to City of Prescott standard detail 1-08. Any deviation must be specially permitted by the Engineering Department.
6. Approval of the Planning & Zoning Department is subject to all other easements, encumbrances, etc. or restriction which may apply to said property by virtue of any City Ordinances and/or state law and deed restrictions. The City takes no responsibility for said restrictions or requirements and the burden to comply with such restrictions lies solely with the property owner and/or applicant.

I, _____, the owner's agent or the owner of record, for the structure located at: _____.

By signing this document I agree to the proposed rerouting for my water service from the building to the new main as shown. I also understand & agree to the installation of a sewer backflow device as shown.

Owner Name	Owner Signature	Date

SP-#68