CITY OF PRESCOTT
ARIZONA
Everybody's Hometown

Public Works Department

433 N. Virginia Street
Prescott AZ 86301
928-777-1130

# ADDENDUM NUMBER ONE
# to the
# PROJECT SPECIFICATIONS
# and
# CONTRACT DOCUMENTS
# for
# Airport Well #3 Equipping Project

**DATE OF ADDENDUM:** **August 16, 2013**

**TO ALL BIDDERS BIDDING ON THE ABOVE PROJECT:**

The following addendum shall be made part of the Contract Documents. All other provisions of the Contract Documents remain unchanged. The Bidder shall acknowledge receipt of this addendum on page 14 of the Proposal by inserting the addendum number and date on the executed page of the Proposal. The contents of this Addendum shall be given full consideration in the preparation of the Bid.

**DRAWINGS**

1. Drawing S-02, Section A – Floor Plan:

   Add Typical Detail A801 to vehicle ramp callout "SEE 'A' DRAWINGS FOR DIMENSIONS AND DETAILS". Typical Detail A801 is attached to this Addendum #1.

2. Drawing S-02, Section A – Floor Plan:

   Typical Detail C120 is called out just east of the electrical room, but is not provided in the Typcial Detail Drawings. Typical Detail C120 is attached to this Addendum #1.

3. Drawing M-02, Section A

   Delete: "Galvanized Guardrail"

   Add: "Aluminum Guardrail"

4. Drawing M-02, Section D

   Delete: "10-inch column pipe" call out

   Add: "8-inch column pipe" call out. Column pipe will be 8-inch, Schedule 40 pipe.

5. Drawing M-03 has been revised and is submitted as an attachment to this Addendum #1. All changes shown on Drawing M-03 have been clouded.

6. Drawing M-04, Section L: The 90-degree elbows shown on the pipe leading into and out of the sand filter (Key Notes 17) do not appear as 8"x10" reducing elbows. Key Note 17 is correct, and the call out is correct. The spools of pipe leading into and out of the sand filter is 8-inch DIP.

7. Drawing M-04, Section L – Key Note 3

   Delete: "10-inch butterfly valve"

   Add: "8-inch butterfly valve"

**TECHNICAL SPECIFICATIONS**

No changes

**SPECIAL TECHNICAL PROVISIONS**

1. Section 04220 – Concrete Unit Masonry and Drawing S-01

   Concrete masonry units to be normal weight per Drawing S-01, "Concrete Masonry Unit" Note #1.

2. Section 04220 – Concrete Unit Masonry, Paragraph 3.05.E

   Delete: "Clean exposed masonry."

   Add: "Exposed masonry shall be cleaned on the same day that it is laid."

3. Section 06174 – Wood Trusses, Paragraph 2.01.A - Lumber

   Delete: "In accordance with stress ratings for species and grades in grading rules of appropriate lumber association or as listed in referenced quality assurance standards, Section 06100, or as indicated on the Drawings."

   Add: "Use Douglas Fir Larch (DF-L) or Spruce Pine Fir (SPF) No. 2 or better."

4. Section 11201 – Furnishing, Delivery and Testing of Arsenic Removal System, Paragraph 1.01.A

   Delete: "Provide **one** complete packaged absorptive media treatment **system** (AMTS)…"

   Add: "Provide **two** complete packaged absorptive media treatment **systems** (AMTS)…"

5. Section 11201 – Furnishing, Delivery and Testing of Arsenic Removal System, Paragraph 1.03.B.5 – Design Criteria: Backwash

   Delete: "**80 psi**"

   Add: "**100 psi**"

6. Section 11201 – Furnishing, Delivery and Testing of Arsenic Removal System, Paragraph 2.02.A.1.d.1-2

   Delete: "**8**-inch flanged" for Inlet and Outlet

   Add: "**6**-inch flanged" for Inlet and Outlet

7. Section 11201 – Furnishing, Delivery and Testing of Arsenic Removal System, Paragraph 2.02.A.1.d.3

   Delete: "**8**-inch flanged"

   Add: "**2**-inch flanged off of 6-inch outlet"

8. Section 11201 – Furnishing, Delivery and Testing of Arsenic Removal System, Paragraph 2.01.B

   Add **bold** text to Paragraph 2.01.B as follows: "*The design is based on an iron-based absorptive media (i.e, E33 or GFH). Any additional modifications* **(not including vessel quantity or size)** *to the design needed for the Metsorb HMRG system shall be included in the CONTRACTOR'S bid price.* **The quantity and size of the vessels shall be as specified herein and shown on the plans.**"

9. Section 11248 – Calcium Hypochlorinte Feed System, Paragraph 1.02.B

   Add: Number "7. Maximum injection pressure of chlorine solution at both injection locations: 150 psi."

10. Section 11312D – Vertical Turbine Pumps, Paragraph 2.06.H – Spacer Coupling

    Delete Paragraph 2.06.H in its entirety. This pump will not have a spacer coupling.

11. Section 11312D – Vertical Turbine Pumps, Paragraph 2.13.A – Witnessing

    Delete: "Source or factory testing shall be witnessed by the ENGINEER or OWNER when scheduled; provide advanced notice of source testing as specified in Section 15958".

    Add: "Source or factory testing does not need to be witnessed by ENGINEER or OWNER, but needs to be performed to determine pump operation characteristics such as pump curve, efficiency, etc. Provide factory test curves of the actual pump to the ENGINEER and OWNER for review."

12. Section 11312D – Vertical Turbine Pumps, Paragraph 1.02.F.1

    Delete: "Certified".

13. Section 11312D – Vertical Turbine Pumps, Paragraph 2.06.B.3 – Enclosing Tube

    Delete: "2-1/2-inch – Schedule 80".

    Add: "3-inch – Schedule 80."

14. Section 11312D – Vertical Turbine Pumps, Paragraph 2.06.B.4.a – Shaft

Add: "416 stainless steel; diameter 1-11/16".

15. Section 11312D – Vertical Turbine Pumps, Paragraph 2.07.A

Delete: "(0.500-inch wall)".

Add: "Schedule 40 (0.322-inch wall)."

16. Section 11312D – Vertical Turbine Pumps, Paragraph 2.07.D

Delete Paragraph 2.07.D (Pressure Test) in its entirety. No hydrostatic test will be required for the column pipe.

17. Section 11312D – Vertical Turbine Pumps, Paragraph 2.07.F

Delete: "...no more than **4** feet of fluid friction..."

Add: "...no more than **5** feet of fluid friction..."

18. Section 11312D – Vertical Turbine Pumps, Paragraph 3.04 – Pump Schedule: Enclosure Type

Delete: " TEFC"

Add: "WP2"

19. Section 11902 – Bag Filters, Paragraph 2.01.A

The mainline sand filter will only be required if the turbidity does not decrease to an acceptable level during well development (Section 01755), as determined by the Owner and Engineer. Bids shall assume the filter is needed.

20. Section 15430 – Emergency Eye/Face Wash and Shower Equipment, Paragraph 2.01.C

Delete Paragraph 2.01.C in its entirety. PVC units will not be allowed.

21. Section 01270 – Unit Prices, Paragraph 1.04.B.47

Delete: "Payment: The CONTRACTOR shall be reimbursed the actual cost charged by the electric utility for temporary power and the installation of the new electrical service. No mark-up of the equipment shall be included. The CONTRACTOR will be reimbursed upon completion of the work."

Add: "Payment: Payment shall include the cost for temporary power and the installation of the new electrical service. No mark-up of the equipment shall be included."

22. Section 15117 – Specialty Valves, Paragraph 2.03

Delete: "Paragraph 2.03 – Pump to Waste Valve in its entirety. The pump to waste valve is a 6-inch motor operated ball valve, as specified in Section 13447 and 15111.

23. Section 11312D – Vertical Turbine Pumps, Paragraph 3.04 – Pump Schedule

Delete: Required Condition 2: Head Range, Feet "**870**"
Required Condition 3: Flow, gpm "**800**"
Required Condition 3: Head Range, Feet "**793**"
Required Condition 3: Minimum Efficiency Percent "**75**"

Add: Required Condition 2: Head Range, Feet "**800-830**"
Required Condition 3: Flow, gpm "**900**"
Required Condition 3: Head Range, Feet "**870-900**"
Required Condition 3: Minimum Efficiency Percent "**80**"

24. " Section 15120 – Piping Specialties

Add: "2.09 Orifice Plates (Concentric Sharp-Edge Paddle Type)

A. Manufacturers: One of the following or equal:
   1. Cameron.
B. Materials: Minimum 316 stainless steel
C. Features
   1. Plate Size and Thickness:
      a. 6-inches and smaller: 1/8" thickness
      b. Larger than 6-inches: ¼" thickness
   2. Edges: Square and sharp.
   3. Finish: 20 micro-inch roughness.
   4. Flatness: Flat within 0.010 of an inch per inch of dam height (dam height = pipe diameter minus orifice diameter, divided by 2)
   5. Markings: Plates shall be marked with the line size, material of construction, and bore size.

2.10 Rupture Disc

A. Manufacturers: One of the following or equal:
   1. BS&B – RLS Disc w/ SRB-7RS head
B. Bursting Pressure: ENGINEER shall provide final burst pressure once arsenic treatment system submittal is reviewed and approved.

**QUESTIONS/CLARIFICATIONS**

1. The City will adjust contract time for the Contractor if delays are incurred because of having to order the sand filter after the well development.

2. The well pump cannot be used for water on the project as we do not want the new pump being constantly turned on and off. There is effluent available at the airport for $500 per acre feet. There is also a fire hydrant at the termination of Ruger Road across from the job site.

3. Pump supplier shall be responsible for supply and coordination of the well pump and driver (motor). Reference sections: 11312D 1.04, 1.06, 2.10, and 3.04.

4. Bidders should ensure that they familiarize themselves with all contract provisions including MAG and COP requirements regarding irregular proposals. The City reserves the right to reject a bid if it is determined to be mathematically or materially unbalanced.

5. Q: What is the Well production GPM Maximum Flow?

   A: Maximum production flow rate is 950 GPM per Section 11312D .

6. Q: Arsenic Treatment to distribution GPM maximum Flow

A: Maximum flow is 500 gpm through each arsenic treatment vessel.

7. Q: In Section 11312D labeled Vertical Turbine Pumps, Part 2.01. There is a list of Manufacturers which include : Weir/Floway, Simflo, and American-Turbine. My question is there any other Manufacturer other than the three listed allowed to be used as long as they meet the specs? Or are the three listed the only Manufacturer's allowed to be used?

   A: 2.01 A says "One of the following or equal."

8. Q: Drawing M-03 key note # 9 calls for a 10" Globe Valve, I refer to spec 15115 and the specified globe valve for larger than 3" calls for Crane 351 or Lunkeheimer 1123 along with the option of Crane 212p or 384p or Lunkeheimer 72-ps or 73-psi. All of these valve are manually operated however key note #9 is drawn as an automatic type valve same as keynote #10 10" pressure reducing valve spec 15118. What is the correct spec for key note #9?

   A: All valves, except for the pump-to-waste valve, are manual.

9. Q: Please Clarify that all valves used for the absorptive media treatment system of 6" are to be manually operated.

   A: All 6" valves associated with the absorptive media treatment system are to be manually operated.

10. Q: SPECIFICATION SECTION 16222 LOW VOLTAGE MOTORS
    2.02 A. 13. Please clarify what motor insulation system is required on the vertical turbine pumps.

    A: Motor insulation shall be according to Section 16222, Paragraph 2.02.A.13.b, which states;

    b. Motors installed in ambient temperatures between 40 degrees Celsius and 50 degrees Celsius:
    1) Provide Class F insulation.
    2) Design temperature rise consistent with Class B insulation.
    3) Rated to operate at an ambient temperature of 50 degrees Celsius at the altitude where the motor will be installed.

11. Q: Drawing M-03: This drawing shows there are 6 valves per vessel. Drawing N-02 shows there are 7 valves per vessel. Which is the correct number of valves per vessel that is required? STWP can perform these same functions using only 5 valves.

    A: 7 valves per vessel is the design (see re-issued Drawing M-03) to allow for greater operational flexibility.

12. Q: Is medium or lightweight CMU block acceptable to use for the building and perimeter wall?

    A: No, normal weight CMU block shall be used on this project.

13. Q: Are the onsite 10" and 12" waterlines to be fully restrained 100% or fully restrained as needed per mag spec?

    A: The 10-inch and 12-inch waterlines will be fully restrained 100%.

14. Q: There is a call out to fully restrain the 6" drain line. There is not a call out for the 12" drain line. Did you want it fully restrained as well?

A: The 6-inch drain line is restrained however the 12-inch drain line is not because the 12-inch line is gravity flow and not pressurized.

15. Q: There is no size given for the ARV on the 12" line. I assume 1" is ok or do you want 2?. Given the ARV is close to the vertical realignment will the city be requiring a 2nd ARV at the Vertical Realignment or is the one enough?

    A: See the standard City Detail 3-17P on sheet C-07 which calls for a 1-inch ARV.

16. Q: Key Note 9 calls for a 10" globe valve however the picture appears to depict a pressure reducing valve similar to Key Note 10 shown elsewhere on the drawing

    A: Key Note 10 is a 10-inch pressure reducing valve; Key Note 9 is an 8-inch globe valve that is used for flow control. Body styles could be similar based on manufacturer.

17. Q: Is the project site with-in the Prescott City Limits? If so what is the tax rate for Prescott?

    A: The site is owned by the City, but located in unincorporated County. The entry road and everything south of the entry road is located within City limits. Contractor must do due diligence to find out the Prescott tax rate.

18. Q: Drawing # C-01 states "REMOVE ALL LOOSE SOILS TO A DEPTH OF 1'-6" (min) AND REPLACE AS SPECIFIED IN SECTION 02300 WITHIN 5'-0" OF BUILDING AMD WELL STRUCTURE FOOTPRINT". Is this depth to be measured from the existing grade, the final grade, the bottom of slab, the bottom of the footer or some other point?

    A: Final grade for the slab would be the bottom of slab. 1'-6" removal is required from the bottom of final grade (bottom of slab).

19. Q: On the Plans Drawing M-03 Sheet 22 Section G1 shows the elevation from the middle of the discharge piping to the bottom of the pump assembly to be 782.75 Feet. What is the actual set depth from the bottom the Discharge Head to the top of the Pump Assembly? Or what is the actual pump set depth required?

    A: Suction bell of pump assembly shall be located at elevation 4180.0 as shown on Drawing M-03, Section G1.

20. Q: Would you consider listing Rollfab Metal Products as one of the listed manufacturers for the project?

    A: No, but the Roolfab product will be considered for use as an equal, if submitted by the Contractor.

21. Q: On page C-03 on the general note: Stain Wall with Cohills Rustic Brown. We were not able to find any information in the spec book in regards to staining the wall.
    Would this be an incidental added cost to the block wall bid item #33 Concrete Masonry Wall?

    A: Under Section 01270, Unit Prices, 1.04 Pay Items, #33 on pg 01270-9, staining should be included in the cost for constructing the wall.

22. Q: On pages C-05, C-06, and C-07 there are (3) 24" RGRCP pipe to be installed. On the inlet side of the pipe, there is rip-rap. I was not able to find dimensions of the area or what size of rip-rap you would like to see put in place. Also were you wanting it grouted in place?

A: On page C-07 there is a note which states that a U Type Head Wall is to be constructed according to Mag Details 501-1 and 501-2. Both of these details are on the same page. This is not rip rap; it is a head wall as the note says. The downstream side says cement mortar is to slope with the edge of pipe and to replace the existing rip rap.

23. Q: On page C-05 referencing the gradation table. On detail R-2, 'See gradation table'. On the gradation table it refers to detail R-1 & R-3. Were your intentions to also include R-2 detail

    A: The gradation table shall be used as called for in Detail R-2 (ie, the top 4-inches of roadway surface).

24. Q: Vertical Turbine Pumps 11312D Section 1.09 warranty. Please keep in mind that the bowls will be pumping sand during the well development. If the pump is pulled within the 18 months and sand wear is present manufacture warranty maybe void.

    A: As we completed the well development and stressed the well production ability it only produced VERY VERY MINOR amounts of sand. As we continue with the well development after the pump installation is complete, it is going to be pumping to reduce the turbidity and not remove sand. There is colloidal fluff sitting on every surface in the well from the lower layer that was punched through and then sealed. This red/orange super fine clay like material that came out of the lower level was so suspendable it didn't even fall out in the settling pond after days of no turbulence. The City does not have concerns regarding excessive wear on the pump bowls during this process.

25. Q: Drawing M-02 Section J and H Key Note 12 calls for a 6" rubber expansion joints. However the drawing shows only a flg xflg spool with something tie them together.
    I do see on section H there is a rubber expansion joint shown on the bottom discharge piping out of the contactor vessels. There is no key note describing the type.

    A: The rubber expansion joints have been shown and called out correctly on the updated Drawing M-03.

26. Q: Bid Item#48 Mainline Sand Filter

    Is this bid Item for the piping that would connect the NPW lines if no sand filter is necessary?

    A: This bid item is for the inclusion of the sand filter. If there is no need for a sand filter then this item will be removed as a strait pipe will simply run across the area that would have contained the sand filter.

27. Q: Key note 6 on sheet 21 drawing M-02 calls out a 15,000 gal steel backwash tank.
    I cannot locate a spec for that tank or drawings for it. Typically in the spec or drawings it will define what connections and piping the tank fabricator will supply in there scope, therefore we don't double up on materials.

    A: The steel backwash tank is shown on Drawing M-05, and the specification for the steel tank is Section 13209B.

28. Q: Please clarify the Guarantee in Section 11201 Part 1.05 Guarantee, Line B, Line 2. Is the Supplier to provide a credit on a rebed volume of media or to supply a cash transaction of credit. For example, if the media exhaust 10% short of the 45,000 bed life, would the City of Prescott receive a 10% discount of the original purchase price towards a rebed or would the Supplier be obligated to return 10% in cash value of the original purchase price of the media to the City of Prescott?

A: The supplier will provide the City with a cash credit if the media does not perform to the required 45,000 BV performance requirement.

29. Q: Section 11201 2.02, A, 2, b 1&9: This section states that the header pipe is to be connected to both sides of the vessels with flanged connections but there are no additional flanged connections called for in 2.02 A, 1. The header pipe is attached to the 8" effluent nozzle via a flanged connection and the ends of the header pipe are supported using support clips attached to the vessel walls. The header is not connected to the sides of the vessel by a flanged connection.

    A: Paragraph 2.02.A.1 addresses flanged connections through the vessel, and Paragraph 2.02.A.2 addresses flanged connections inside the vessel for support purposes.

30. Q: Can the media fill be 4" at the top and bottom of the tangent line of the side shell instead of 8"?

    A: 8" minimum, or multiple outlets as sized by manufacturer.

31. Q: Drawing M-03: This drawing shows an air release valve as 1 ½". Section 15119 2.02 lists the air release valve to be 1". What is the correct size?

    A: Valve shall be a 2-inch air/vac valve on top of each media vessel

32. Q: 11201-1.05.B.1. "Bids will be reviewed based in part on guaranteed bed volume production values". How will the OWNER evaluate this? We don't see in the bid package where greater guaranteed bed volumes can be listed. I ask because one of the supplies mentioned that their media could last longer and still utilize the current pressure vessel size listed in the specifications.

    A: If a bidder takes exception to the minimum BVs by proposing a BV quantity that is evaluated to be inadequate, then this section of the spec may be used as the basis for determining that the bid is non-responsive.

33. Q: Spec 11201-1.05.B.2-Guarantee: "if media does not perform as guaranteed, SUPPLIER shall provide a credit to the OWNER based on the amount of media value remaining using a straight-line, prorated method of determination." My question is this: Is the CONTRACTOR obligated, under this contract, to install new media if minimum bed volumes of 45,000 are not met by SUPPLIER?

    A: There is no obligation for the contractor to install new media if the minimum BVs of 45,000 are not met by the supplier. Instead, the value of the additional media that is needed to meet the minimum bed volumes shall be credited back to the Owner by the supplier.

34. Q: Multiple questions came up regarding Bed Volumes (BV)

    A1: The verbiage in the spec that guaranteed BVs may be used to evaluate bids was intended to give the Owner the ability to throw out a supplier who might try to give a low BV number and low equipment quote. The evaluation will not be solely on costs, as the owner could be forced to accept the low cost even though the bidder takes exception to the BV minimum per the spec.

    A2: While a life-cycle analysis using the BV guarantee could be used to determine the best media, the intent of the specification wording is to allow the owner to eliminate the low bidder if the media offered does not meet the specified BVs, so as to provide a media that is acceptable. The City does not want a bidder providing a low bid/cost while at the same time taking exception to the minimum BV guarantee.

**- END -**

City of Prescott, Public Works Department

Mark Nietupski, Public Works Director

**Acknowledgement:** (must be signed and turned in with the bid documents)

| | |
|---|---|
| Company Name | Date |
| Signature of Company Official | Date |

GENERAL NOTE:

1. ALL PIPING UNDER BLDG SHALL BE CONCRETE ENCASED PER P040 TYP WITHOUT REBAR

KEY NOTES:

1. WELL PUMP & MOTOR
2. 10" RESTRAINED FLEXIBLE COUPLING
3. 8" MAGNETIC FLOW METER
4. 10" CHECK VALVE
5. SAND FILTER (IF NECESSARY)
6. DECANT FILTER
7. DECANT PUMP
8. 10" GATE VALVE
9. 8" GLOBE VALVE
10. 10" PRESSURE REDUCING VALVE

KEY NOTES (CONT):

11. 10" ORIFICE PLATE (2.66" Ø OPENING) WITH ORIFICE INVERT FLUSH TO PIPE INVERT
12. 8" RUBBER EXPANSION JOINT
13. 8" MAGNETIC FLOW METER
14. 8" BUTTERFLY VALVE
15. 2" BALL VALVE
16. 2" AIRVAC VALVE
17. 4" RUPTURE DISC BRAR RLS DISC WITH SRS-7RS HEAD
18. PRESSURE GAUGE PER MP104 TYP
19. PRESSURE TRANSMITTER & SWITCH PER MP102 TYP
20. 3" TAPPING SLEEVE, 3" GATE VALVE & 3" AIR & VACUUM VALVE
47. 8" GATE VALVE
48. 10" x 8" TEE
49. 10" x 8" REDUCING 90° BEND

KEY NOTES (CONT):

21. 1/2 " BALL VALVE & 1/2 " AIR RELIEF VALVE
22. 10" DRESSER STYLE COUPLING (RESTRAINING)
23. 1" BRW TO FREEZELESS YARD HYDRANT
24. NOT USED
25. 8" SURGE ANTICIPATOR VALVE
26. 10"x4" REDUCER
27. 10"x8" REDUCER
28. 10" TEE
29. 8"x8" SPLASH PAD SIM TO C C-01
30. PIPE SUPPORT PER P026 TYP
31. PIPE SUPPORT PER P402 TYP
32. FLOOR PENETRATION PER P404 TYP
33. WALL PENETRATION PER P302 TYP
34. 10" MAGNETIC FLOW METER
35. PIPE SUPPORT PER P460 TYP
36. PIPE SUPPORT PER P468 TYP
37. UNISTRUT P2946 OR P2946 OR EQUAL
38. SAMPLE TAP
39. 10"x8" TEE
40. 4" GATE VALVE

KEY NOTES (CONT):

41. 3" STEEL PIPE SUPPORT
42. 10"x8" REDUCER
43. FOR CLAMP ATTACHMENT TO PIPE SEE P024 TYP
44. PRESSURE TRANSMITTER & GAUGE PER MP102 TYP
45. LABEL ALL PIPING INSIDE BUILDING
46. 3" BUTTERFLY VALVE

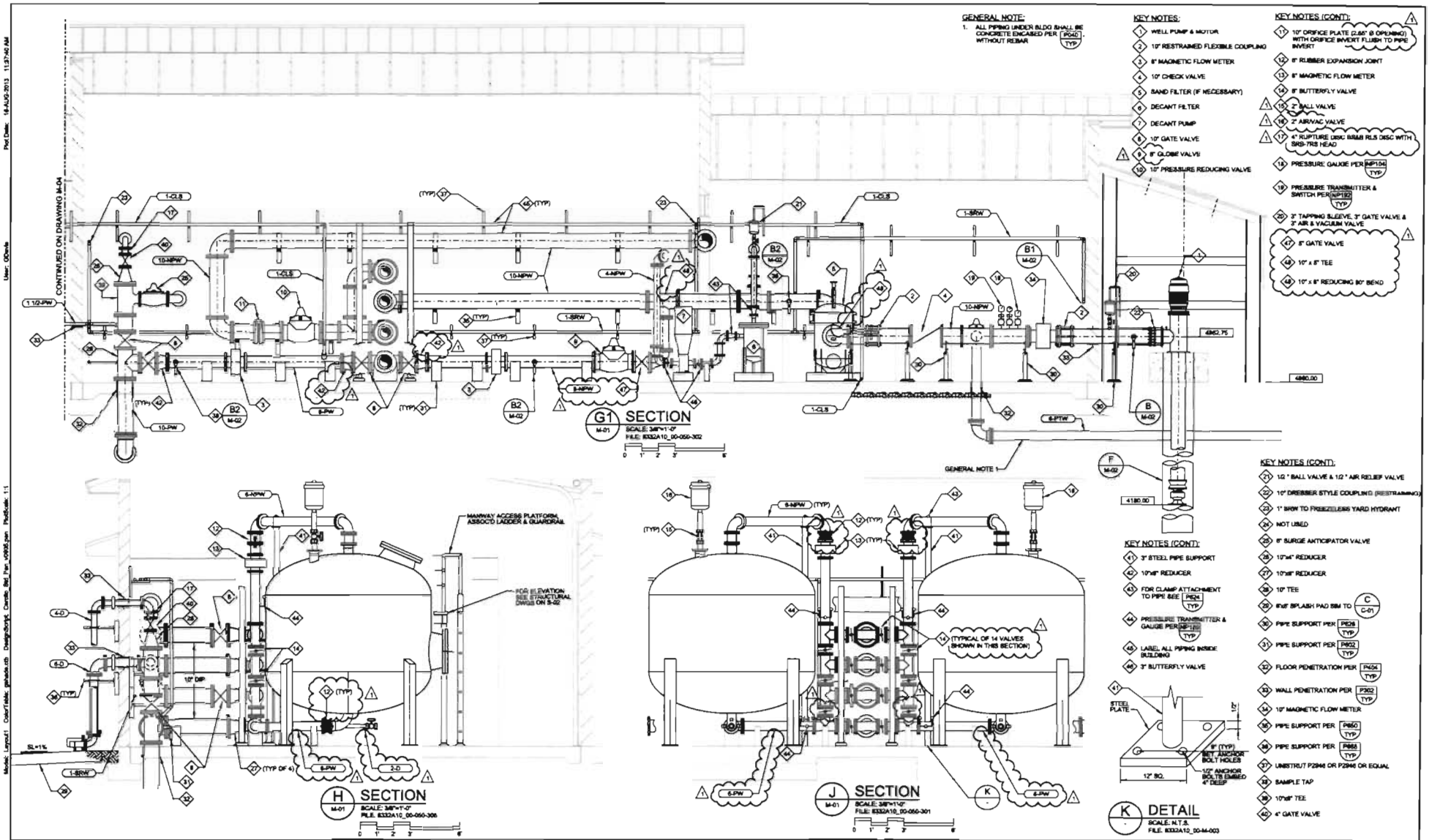





K DETAIL
SCALE: N.T.S.
FILE: 8332A10_00-M-003

| REV | DATE | BY | DESCRIPTION |
|---|---|---|---|
| 1 | 8/14/13 | NEN | ADDENDUM NO. 1 |

DESIGNED NN
DRAWN LGIAO
CHECKED MR
DATE AUGUST 2013

carollo

CITY OF PRESCOTT, AZ
AIRPORT WELL NO. 3 EQUIPPING
MECHANICAL
WELL SITE BUILDING
PIPING SECTIONS

VERIFY SCALES
BAR IS ONE INCH ON ORIGINAL DRAWING
0 1"
IF NOT ONE INCH ON THIS SHEET, ADJUST SCALES ACCORDINGLY

JOB NO. 8332A.10
DRAWING NO. M-03
SHEET NO. 22 OF 61

PROJECT NO. 8332A10 FILE NAME: 8332A10_00-M-003.dgn

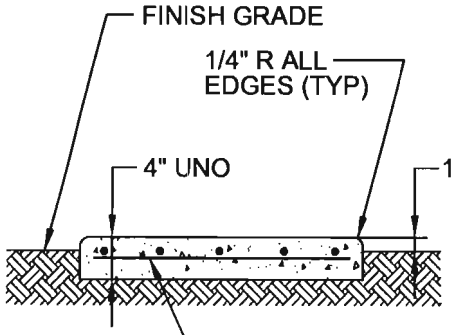


A - TYPICAL SECTION

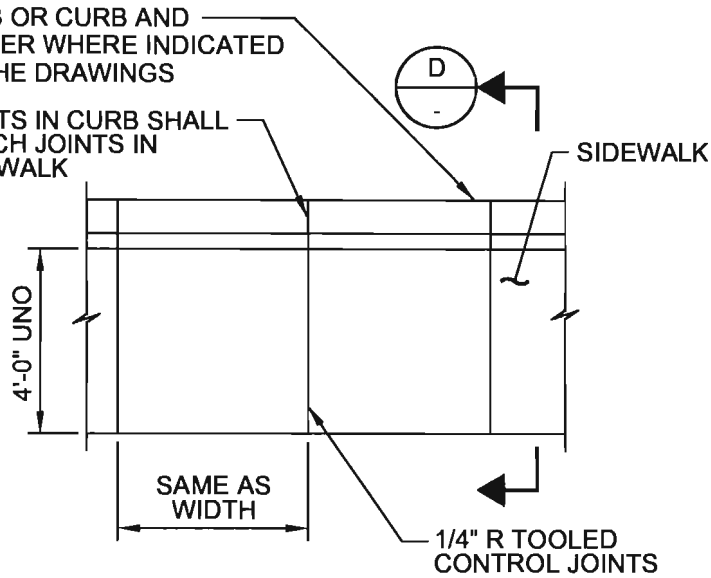


B - PLAN

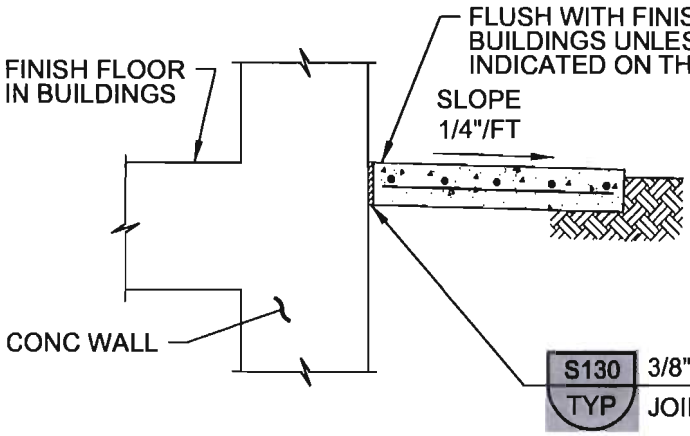


C - SECTION AT STRUCTURES

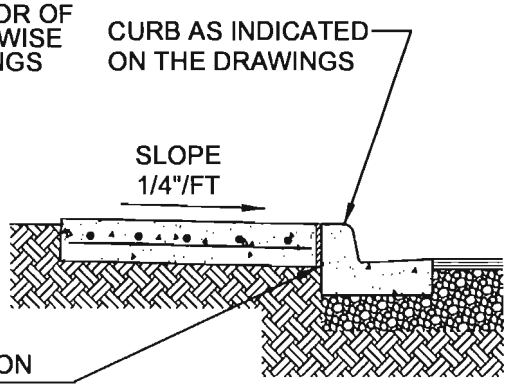


D - SECTION AT CURBS

NOTES:

1. PROVIDE 3/4" EXPANSION JOINTS IN ACCORDANCE WITH DETAIL S130/TYP AT ENDS OF CONCRETE PLACEMENT, POINTS OF CURVATURE, AT INTERSECTIONS, AT STRUCTURES, AND AT MAXIMUM SPACING NOT TO EXCEED 60 FEET.
2. PROVIDE WEAKENED PLANE CONTROL JOINTS AT 15 FEET OC MAXIMUM.
3. ELEVATIONS AS INDICATED ON THE DRAWINGS.

C120 TYP — SIDEWALK

N

07/25/13

carollo

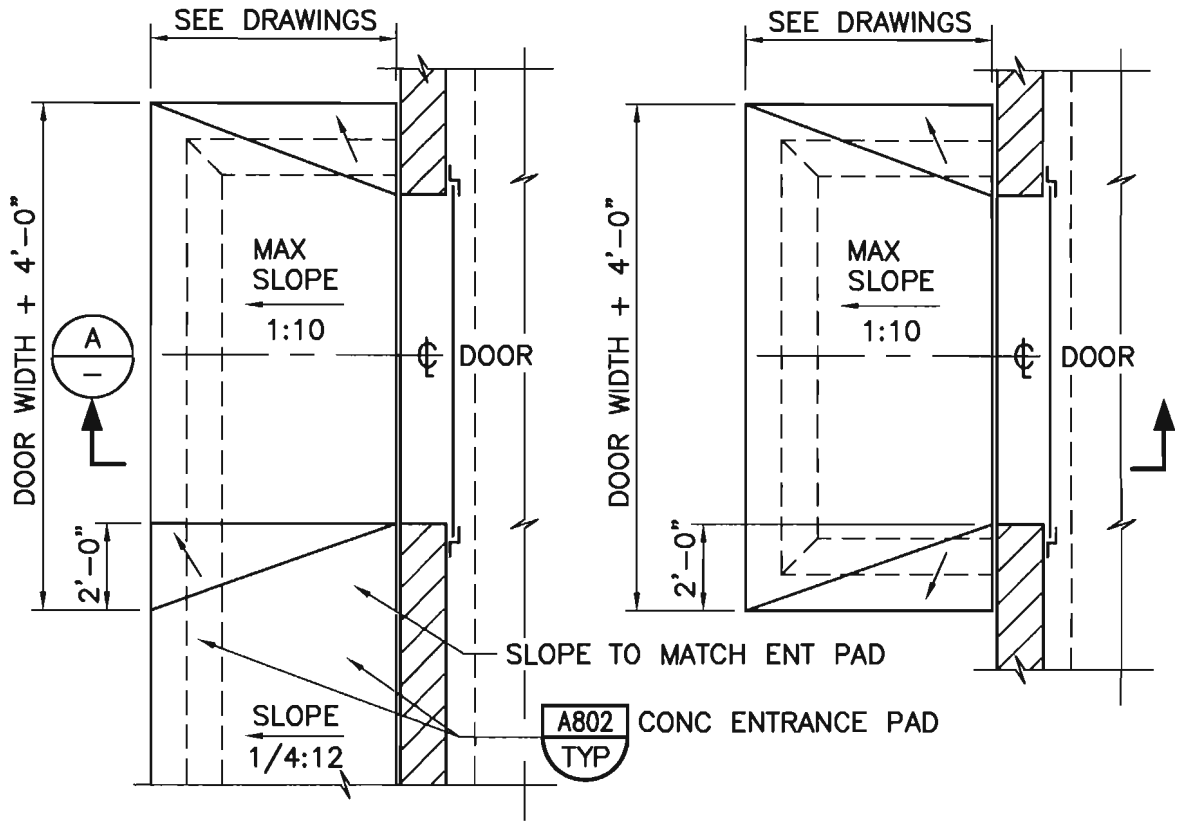


PLAN @ RAMP/ENT PAD

PLAN @ RAMP

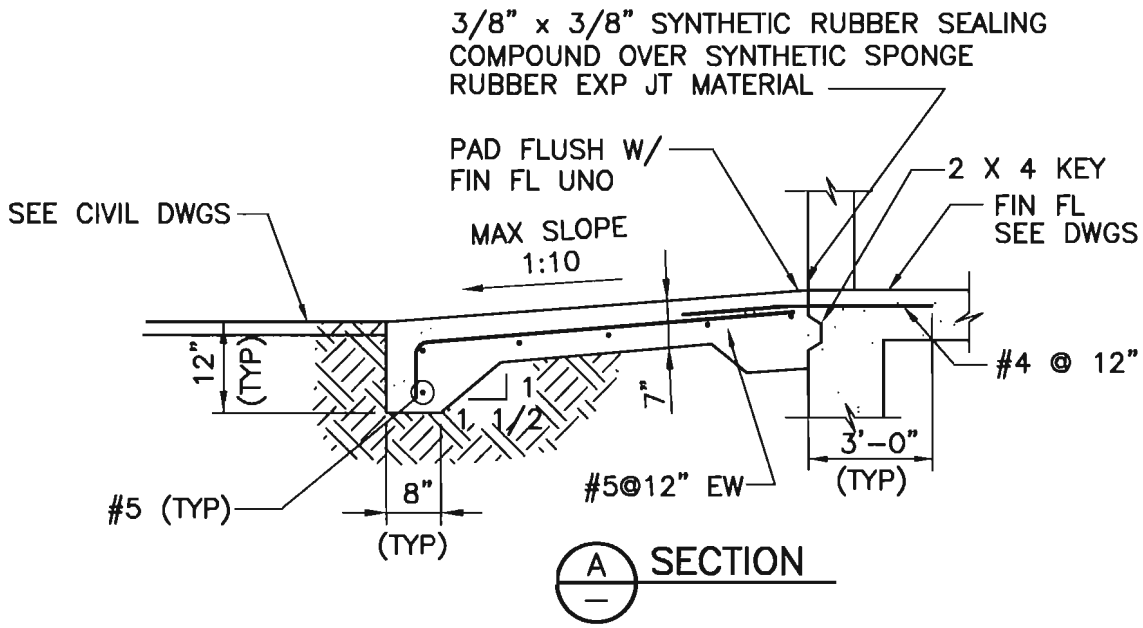


A801 TYP

# RAMP AT GARAGE DOOR

A801-N-P 02-11-04